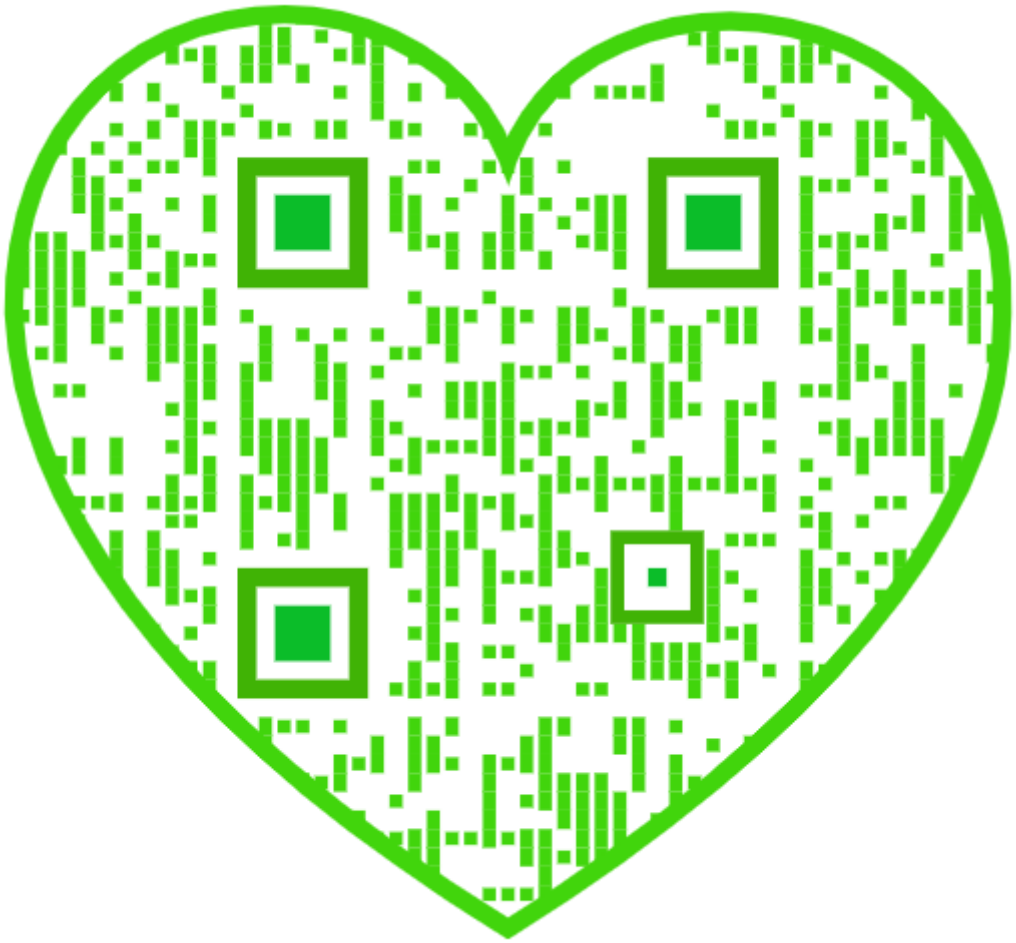

CALIFORNIA

A TEXT BOOK

OF

Ore Dressing

By

ROBERT H. RICHARDS, S.B., LL.D.

Professor of Mining Engineering and Metallurgy at the Massachusetts Institute of Technology, Boston, Mass., U.S.A.

Author of "*Ore Dressing*"

ASSISTED BY

EARL S. BARDWELL AND EDWIN G. GOODWIN

IN ONE VOLUME

1909

McGRAW-HILL BOOK COMPANY

NEW YORK

UNIV. OF
ILLINOIS

ENGINEERING

COPYRIGHT, 1909
BY THE
MCGRAW-HILL BOOK COMPANY

The Plimpton Press Norwood Mass. U.S.A.

PREFACE.

THE addition of Volumes III and IV to the author's treatise on ore dressing has made the work entirely impossible as a text book. To satisfy the demand for a book suitable for student use the present volume has therefore been prepared.

In preparing this volume the author has endeavored to describe fully typical machines and processes. The long tables of details showing adjustments of various machines in mill practice as contained in Ore Dressing have been omitted, and the data contained therein have been generalized as far as possible. Fewer mills have been described and the attempt has been made to select for description typical mills in the various important districts. Throughout the volume the attempt has beeen made to give the best modern practice, and matters of mere historic interest have been generally omitted. Bibliographies have been omitted as the source of the information can be readily traced through Ore Dressing.

In response to the demands of a considerable number of teachers of ore dressing a chapter on coal washing has been added. In the limited number of pages which was available for the discussion of this important question it is obviously impossible to treat the question fully. The attempt has, however, been made to describe the principal machines and devices that are used in the preparation of coal for coking and for the market. A few types of bituminous coal washeries have been discussed with some detail. The author believes that the chapter may serve to give the student a good insight into the subject.

The book has been written on the basis that concrete facts, descriptions of machines or processes, should precede the theory of operation. This arrangement the author firmly believes to be the logical method of presenting a subject to students.

As no two teachers take up the subjects in the same order it is impossible to establish in a text book an order to suit all teachers. The author has therefore presented the various subjects in the same order that has been followd in Ore Dressing. In presenting the subject to students the author is in the habit of taking up primarily the principles of ore separation as outlined in Chapter I. This leads naturally to the methods of applying these principles and the presentation of a complete mill tree. After the student has grasped the idea of the mill process as a whole and has seen how various machines are linked together, each doing its part in the process of mineral separation, the machines themselves can be taken up with profit and studied more in detail,

101227

constant reference being made to their position in the milling operation. Finally comes the study of actual mills which shows the student the modifications that are made to suit special conditions.

Before laying out the book the author corresponded with many of the teachers of ore dressing and wishes to acknowledge in this place the many helpful suggestions which they so kindly offered.

The author wishes also to acknowledge the assistance of Messrs. Earl S. Bardwell and Edwin G. Goodwin. After the general outline of the book was laid out the actual work of condensation and the writing of the same was done by them.

ROBERT H. RICHARDS,

Massachusetts Institute of Technology, Boston, Mass., October, 1909.

TABLE OF CONTENTS.

PAGES

PREFACE v

TABLE OF CONTENTS vii

CHAPTER I.—GENERAL PRINCIPLES 1–5

Comparison of ore dressing and smelting, 1. Physical properties of minerals as applied to ore dressing, 2.

PART I. — PRELIMINARY BREAKING

CHAPTER II. — PRELIMINARY BREAKING 9–43

Blasting in the mine, 9. Calcining for friability, 9. Hand breaking, 9. Steam or drop hammers, 11. Rock breakers of the Blake type, 13. Jaw breakers with equal movement on coarse and fine lumps, 23. Breakers of the Dodge type, 23. Comparison of Blake and Dodge-type breakers, 25. Spindle or gyrating breakers, 27. Comparison of jaw and gyratory breakers, 40.

PART II. — FINAL CRUSHING

CHAPTER III. — ROLLS 47–70

Principle and purpose of rolls, 47. General construction, 47. Discussion of parts, 47. Width, 54. Diameter, 54. Speed, 55. Space and angle of nip, 57. Angle of nip, 58. Speed and angle of nip, 61. Friction, 62. Quality of work, 64. Capacity, 66. Graded crushing, 68. Cost of crushing, 69.

CHAPTER IV. — STEAM STAMPS 71–83

Classification of stamps, 71. Principle and purpose of steam stamps, 71. Foundations, anvil blocks, mortar, screen, and frame, 71. Die, ring, staves, and shoes, 72. Floors, bins, and feeding arrangements, 76. Discharge, 76. Water, 76. Capacity, 77. Power, 77. Cost of crushing, 77. Uses, 77. Cross-compound stamps, 78. Tandem or steeple-compound stamps, 79. Comparative performance of single and compound stamps, 79.

CHAPTER V. — GRAVITY STAMPS AND AMALGAMATION 84–136

Principle of action, 84. Description of various parts, 85. Foundation, 85. Mortar block, 85. Frames, 88. Mortars, 89. Screen, 91. Screen frames, 95. Chuck block, 96. Lip apron, 96. Collars and bearings, 96. Cam shaft, 97. Cams, 97. Stem, 100. Tappets, 100. Boss or stamp head, 100. Shoe, 101. Dies, 101. Proportions of stamp parts, 102. Driving mechanism, 102. Lateral thrust, 102. Feeders, 103. Amalgamation, 103. Properties of mercury, 103. Amalgams, 103. Amalgamating plates, 104. Area and thickness of plates, 108. Slope of plates, 108. Materials for plates, 109. Treatment of plates, 111. Amalgamating new plates, 113. Dressing plates, 115. Cleaning plates, 116. Effect of temperature on amalgamation, 119. Mercury traps, 120. Clean-up barrels, 120. Clean-up pan, 121. Cleaning amalgam, 122. Squeezing amalgam, 123. Retorting amalgam, 123. Melting bullion, 124. Care and purification of mercury, 125. Loss of mercury, 126. Losses of gold in amalgamation, 126. Running of gravity stamps, 127. Kind of ore, 127. Size of feed, 127. Method of feeding, 127. Mercury fed to battery, 127. Area of discharge, 128. Height of discharge, 129. Order of drop, 130. Number and height of drops, 130. Power, 134. Cost of crushing, 134. Advantages and disadvantages of gravity stamps, 136.

CHAPTER VI. — GRINDERS OTHER THAN GRAVITY STAMPS 137–164

Purpose, 137. Classification, 137. Arrastra, 137. Continuous grinding pan, 139. Tube and ball mills, 142. Details of tube mills, 143. Speed, 146. Power, 146. Quality of work, 147. Capacity, 147. Efficiency, 148. Ball

PAGES

mills, 150. Chili mill, 152. Huntington mill, 154. Foundations, 156. Feeding, 156. Screens, 156. Quality of work, 159. Cost of crushing, 160. Griffin roller mill, 161. Swing hammer pulverizers, 163.

CHAPTER VII. — LAWS OF CRUSHING 165–180

Nature of material crushed, 165. Comparative strength of stone, 165. Extent of crushing desired, 167. Work required for crushing, 167. Power losses in crushing, 172. Conditions under which crushing is effected, 173. Theory of tube-mill action, 176. Comparison of various types of crushing machines, 177. Relative efficiency of re-grinding machines, 177.

PART III. — SEPARATING, CONCENTRATING, OR WASHING.

CHAPTER VIII. — PRELIMINARY WASHING AND HAND SORTING 183–200

Preliminary washers, 183. The trough washer, 183. Log washers, 184. Longdale log washer, 185. Thomas log washer, 187. Turbo log washer, 187. Horizontal logs, 188. Wash trommels, 188. Crickboom wash trommel, 189. Washing pans, 191. Hydraulic giants, 192. Jet washer, 192. Hand picking or sorting, 192. Picking in the mine, 194. Picking in the rock house, 194. Picking in the mills, 195. Cost of hand picking, 195. Picking tables or belts, 196. Stationary tables, 197. Picking chutes, 197. Shaking tables, 197. Belt, rope, and plate conveyors, 198. Speed and capacity, 198. Revolving circular picking table, 198. Comparisons, 199. Cobbing devices, 200.

CHAPTER IX. — PREPARATION OF THE CRUSHED ORE FOR CONCENTRATION . 201–250

Screen sizing, 201. Grizzlies or bar screens, 201. Rowand incline screen, 202. Pratt ore sizer, 203. Shaking screens or riddles, 204. Ferraris shaking screen, 205. Impact screen, 207. Coxe gyrating screen, 207. Trommels, 207. Size, 210. Slope, 210. Speed, 211. Materials for screens, 211. Driving mechanism, 212. Power, 212. Feeding, 212. Water, 213. Capacity, 213. Cost of screening, 213. Cones, pyramids, and prisms, 213. Octagonal revolving screens, 214. Sectional trommels, 215. Tandem and concentric trommels, 215. Systems of screening by trommels, 215. Comparisons of trommels and riddles, 216. Callow traveling belt screen, 217. Classifying by settling in water, 219. Classifiers, definition and classification, 219. Classifiers using rising currents of clear water, 220. Evans classifier, 221. Richards' deep-pocket hydraulic classifier, 223. Double-cone classifier, 229. Richards' annular vortex classifier, 229. Hindered-settling classifiers, 231. Improved Wolftongue classifier, 232. Richards' pulsator classifier, 233. Classifiers not using rising currents of clear water, 236. Surface-current box classifiers, 238. Rittinger's spitzkasten, 242. Whole-current box classifiers, 243. Callow cone, 244. Ayton intermittent thick-pulp extractor, 246. Clarifying tanks, 246. Binkley system of settling tanks, 247. Clarifying reservoirs, 248. Distributing devices, 248. Limitations of hydraulic classifiers, 250.

CHAPTER X. — PRINCIPLES OF SCREEN SIZING AND CLASSIFYING 251–276

Sieve scale, 251. Thickness of the plate or wire, 253. Difficulties of screening, 254. Shape and arrangement of holes, 254. Percentage of opening, 254. Limits of the sieve scale, 255. Action of trommels, 255. Effect of centrifugal force, 255. Rate of travel of the ore, 257. Effect of slope, 257. Effect of length and slope combined, 260. Effect of speed, 261. Effect of varying diameter, 261. Depth of bed and quality of work, 261. Mill screening, 262. Laws of classifying by settling in water, 262. Free settling and hindered settling defined, 262. General principles of free settling, 263. Velocity of settling under free-settling conditions, 263. Theoretical value for hindered-settling ratio, 268. Tubular classifier tests on hindered settling, 270. Full-teeter velocities of quartz and galena, 272. Free settling versus hindered settling, 273. Classifier design, 274. Extent of classification, 275.

CHAPTER XI. — COARSE-SAND CONCENTRATING 277–318

Jigs: principle, purpose, and definitions, 277. Movable-sieve hand jigs, 278. Continuous movable-sieve power jigs, 281. The Hancock jig, 282. Fixed sieve jigs, 283. Harz jigs, 283. Hodge jig, 287. New Century jig, 287. Classifier jigs, 289. Woodbury jig, 290. Richards' pulsator jig, 291. Details of jigs in general, 295. Materials for frames and tanks, 295. Hutches, 295. Plungers, 297. Connecting rods, 298. Eccentric, 298. Shaft and pulleys, 298. Accelerated mechanisms, 299. Water, 300. Sieves and sieve

PAGES

frames, 300. Methods of feeding jigs, 301. Drop between sieves, 302. Size of sieve hole, 302. Material of bottom bed, 303. Removal of coarse concentrates, 304. Skimming the sieves, 304. Automatic discharges, 304. Gate and dam discharges, 305. Height of gate, 306. Removal of tailings, 306. Number of sieve compartments, 306. Size of jig sieves, 306. Capacity, 307. Power, 308. Sizes treated, 308. Water quantity, 309. Theory of jigging, 309. Pulsion, general principles, 309. Pulsion-jig tests on hindered settling, 310. Pulsion velocity, 310. Suction, general principles, 312. Effect of jig bed, 318. Sizing before jigging, 318.

CHAPTER XII. — FINE-SAND CONCENTRATING 319–364

General principle of concentration, 319. Riffles, 319. Undercurrents, 322. Revolving strakes, 322. Carpet and blanket tables, 323. Cradle or rocker, 323. Mechanical batea, 324. Gilpin County bumping table, 324. Jerking tables, 325. Wilfley table, 326. Foundation, 326. Head motion, 327. Tilting frame, 328. Deck, 329. Elevator, 331. Feed, 331. Capacity, power, water, costs, etc., 332. Operating conditions, 333. Investigations of Wilfley table work, 333. Sized versus classified feed for Wilfley tables, 341. Proper treatment of classified products, 341. Further investigations, 342. Agitation ratio, 345. General comments on rectilinear tables, 348. Comparison of tables with and without riffles, 348. Comparison of side-bump and end-bump tables, 349. Vanners, 350. Side-shake vanner, 350. Shackelford's box-cleaning device, 353. Vanner belts, 354. End-shake vanners, 355. Vanners with tipping or undulating motion, 356. Comparision of side-shake and end-shake vanners, 357. Gyrating vanners, 358. Operation of vanners, 359. Quality of feed, 359. Speed, 360. Slope, 360. Water, 360. Bed, 361. Capacity and power, 362. Costs, 362. Principle of vanner separation, 363. Care of concentrating machines, 364.

CHAPTER XIII. — SLIME CONCENTRATING 365–392

Cornish frames, 365. Canvas tables, 366. Building tables, 368. Round convex buddles, 368. Round concave buddles, 369. Comparison of convex and concave slime tables, 369. Rectangular buddles, 370. Tyes, 370. Fixed, circular convex slime table, 370. Kieves, 371. Revolving, circular, concave slime table, 375. Operation of circular slime tables, 375. Size of grains, 376. Preliminary classification and specific gravity, 376. Shape of grains, 376. Slope, 377. Water, 377. Speed, 378. Capacity, 378. Belt film tables, 379. Experiments on size of grains, slope of table, and water quantity for film sizing, 379. Shaking or bumping tables, 385. Rotary percussion tables, 385. Vanners, 385. End-shake belt slimer, 385. Side-shake belt slimer, 386. Belt percussion tables, 386. Comparison of vanners with convex slime tables, 387. Side-bump tables with plane surface, 388. Wilfley slimer, 389. Riffled slimers, 391. Wilfley table as a slimer, 391. Depth of bed on slime tables, 392.

CHAPTER XIV. — MISCELLANEOUS PROCESSES OF SEPARATION 393–426

Magnetic separation and concentration, 393. Electromagnets, 394. Action of substances in a magnetic field, 396. Classification of machines, 397. Magnetic separators, of the primary-magnet type, 397. Cobbing magnets, 397. Wetherill separator, 398. Capacity, 399. Width, thickness, and proper conveyor-belt speed, 399. Width, thickness, and proper take-off belt speed, 400. Distance apart of magnets, 400. Power, 401. Wear and tear, 401. Attendance, 401. Belt-type magnetic separator for dry and strongly magnetic ores, 401. Drum-type magnetic separators for dry and strongly magnetic ores, 403. Drum-type magnetic separator for wet and strongly magnetic ore, 404. Edison magnetic separator, 405. Secondary or induction-type magnetic separators, 405. Belt-type separator for dry and strongly magnetic ores, 406. International magnetic separator, 408. Roasting and calcining for magnetism, 410. Roasting the sulphides, 411. Roasting the oxides, 411. Calcining the carbonates, 412. Experiments in roasting sulphides, 412. Furnaces, 412. Electrostatic ore separation, 413. Pneumatic concentration and separation, 414. Air concentrators using a continuous blast of air, 415. Air concentrators which project the particles by a force other than an air blast, 416. Air concentrators using intermittent pulsations of air to effect the separation, 416. Pneumatic tables, 418. Dry blanket, 419. Dry panning, 419. Advantages of air as compared with water, 419. Disadvantages of air as compared with water, 419. Flotation processes, 421. Theory of flotation processes, 421.

PAGES

Elmore vacuum process, 422. Cattermole or Minerals Separation Company process, 422. Potter and Delprat processes, 423. DeBavay process, 423. Macquisten process, 424. Greased plate, 424. Disintegrating and screening, 424. Decrepitation and screening, 425. Roasting for porosity, 425. Centrifugal separation, 425. Weathering, 426.

PART IV. — ACCESSORY APPARATUS.

CHAPTER XV. — ACESSORY APPARATUS 429–457

Bins and receiving floors, 429. Samplers, 430. Difficulties attending sampling, 430. Requisites to accuracy, 430. Hand sampling, 430. Moisture samples, 431. Mechanical sampling, 432. Snyder sampler, 432. Vezin sampler, 432. Brunton sampler, 433. Size of samples, 433. Limit of automatic sampling, 434. Automatic feeders, 435. Hendy's Challenge feeder, 435. Gates feeder, 435. Distributors, 437. Water regulators, 438. Conveyors, 438. Blaisdell system of mechanical ore handling, 441. Elevators, 443. Sand wheels, 444. Pumps for handling sand and water, 446. Spiral sand pump, 446. Launders, 448. Unwaterers and driers, 452. Fleming dewatering wheel, 452. Rogers' dewatering screen, 452. Drying floors, 453. Cylindrical driers, 453. Power driers, 455. Removal of pick points, bolts, sticks, etc., from crushed ore, 455. Dust fans and chambers, 456. Weighing ore, 456. Blake-Denison weigher, 456.

PART V. — MILL PROCESSES AND MANAGEMENT.

CHAPTER XVI. — MILL PRINCIPLES AND PROCESSES 461-571

Summary of principles, 461. Schemes of mill treatment, 464. Mill site, 465. Hillside-type mill, 465. Level-site mill, 471. Modern ore-dressing plants, 478. Methods of study, 478. Central mill of the North Star Mines Company, Grass Valley, California, 480. Homestake Mining Company, Lead, South Dakota, 482. Bunker Hill and Sullivan Mill, Kellogg, Idaho, 488. Mill No. 3 of the Federal Lead Company, Flat River, Missouri, 495. Concentrating mills of the Empire Zinc Company, Canon City, Colorado, 506. Silver Lake Mill, Garfield Smelting Company, Silverton, Colorado, 513. Mills Mining and Reduction Company Hazel Green, Wisconsin, 523. Witherbee, Sherman and Company Inc., Mineville, New York, 526. Lebanon Plant of the Pennsylvania Steel Company, Lebanon, Pennsylvania, 536. Boston and Montana Consolidated Copper and Silver Mining Company, Great Falls, Montana, 541. Utah Copper Company, Garfield plant, Garfield, Utah, 550. Concentrator No. 6 of the Arizona Copper Company, Limited, Morenci, Arizona, 555. Calumet and Hecla Mining Company, Calumet, Michigan, 559. The Trimountain Mining Company, Copper Range, Consolidated Company, Trimountain, Michigan, 564.

CHAPTER XVII. — GENERAL CONSIDERATIONS 572–619

Locations of mills, 572. Mill site, 572. Plant, 573. Construction of mill buildings, 573. Power, 574. Rope transmission, 578. Gearing, 578. Sprocket and chain drive, 578. Friction clutches, 578. Design of machines, 578. Lubrication and care of journals, 579. Heating the mill, 580. Ventilation and dust prevention, 581. Lighting, 581. Labor in the mills, 581. Water, 582. Arrangement of machines in the mill, 584. Guarding the work of machines, 586. Storing and shipping concentrates, 586. Disposal of tailings, 587. Care of mills, 588. Percentage of extraction, 588. Limit of concentration, 589. Treatment of middlings, 592. Schedules for calculating values of zinc, lead, and silver ores, 592. Precious metal values, 594. Facts upon which value of copper concentrates depend, 595. The price at which profits vanish, 595. Costs, 596. Cost of erecting mills, 596. Cost of milling, 597. Accounts and reports, 598. Testing, 599. Crushers for laboratory use, 600. Flotation by heavy solution, 608. Magnetic separators, for testing, 609. Roasting for magnetic tests, 610. Amalgamation, 611. Ball mill test, 611. Bottle amalgamation, 612. Pan amalgamation for silver, 612. Clinometers, 612. Film gauge, 612. Specific gravity test, 613. Microscope, 613. Assay office, 613. Weighing and measuring, 614. Testing for a process, 615. Mineral examination, 615. Sizing and assaying, 616. Hand picking test, 616. Jigging test, 618. Fine concentration test, 618. Free milling gold ores, 619. Small tests compared with mill work, 619.

PART VI. — COAL DRESSING.

PAGES

CHAPTER XVIII. — COAL DRESSING 623–678

Necessity for washing coal, 623. Bituminous coal practice, 624. Bradford coal breaker, 624. Corrugated and toothed rolls, 625. Stedman disintegrator, 625. Hinged hammer pulverizers, 627. Scaife trough washer, 628. Jeffrey-Robinson coal washer, 630. Luhrig jig, 631. New Century jig, 633. Stewart jig, 634. Pittsburg jig, 634. Campbell table, 635. Drying washed coal, 637. Luhrig washery, 639. Stein and Boericke washery, 640. Robinson washery, 642. Anthracite coal practice, 647. Outline of method of preparing anthracite for the market, 649. Breaking anthracite, 649. Sizing anthracite, 650. Bar screen, 651. Finger bars, 652. Oscillating bars, 652. Revolving screens, 653. Shaking screens, 655. Coxe gyratory screen, 656. Hand picking, 656. Emery slate picker, 657. Langerfield slate picker, 658. Pardee spiral slate picker, 658. Lehigh Valley jig, 661. Christ jig, 661. Conveying the coal to the top of the breaker, 666. Phillips' cross-over dump, 668. Steam tipple dump, 668. Chutes, conveyors, and elevators, 670. Capacity of elevators, 677. Power for elevators, 677.

APPENDIX 679–693

Equivalents of weights and measures, 679. Atomic weights, 680. Specific gravities of minerals and common metals, 680. Weight of broken ore, 681. Table for converting slope in degrees to slope in inches, 682. Gauges for brass and iron wire, 686. Table of diameters and areas of circles, 687. Table of quartz diameters and velocities for computing spigots, sorting columns, pockets, cones, and tanks, 690.

INDEX 695–702

LIBRARY OF THE UNIVERSITY OF CALIFORNIA

CHAPTER I.

GENERAL PRINCIPLES.

§ 1. An *ore* is a natural aggregation of minerals from which a metal or metallic compound can be recovered with profit on a large scale. When the percent of metal is too low for profitable extraction the rock ceases to be an ore.

§ 2. The process of mechanically separating and saving valuable minerals from the valueless material of an ore whereby the valuable minerals are concentrated into smaller bulk and weight by discarding some of the waste, or the process of mechanically separating two or more minerals, which combined have little value, into two or more products, each of increased value, is called Ore Dressing. (Aufbereitung, German; Préparation Mechanique, French.) Several other names are also in common use in the English language, namely, "concentration of ores," "washing of ores," "separation of ores," and "reduction of ores." The latter phrase is not to be commended, as it really belongs to metallurgy, and its use in ore dressing only produces a confusion of ideas. The phrase "separation of ores" should not be used when "concentration of ores" is meant, as it refers more to hand methods of concentration than to mechanical means.

The advantages gained by concentrating the valuable minerals into a smaller bulk are: first, that the cheaper mechanical method of rejecting the waste material is substituted for the more expensive chemical method of the smelting furnace; and second, the rejected waste material is not shipped, and this saves freight. In the case of non-metalliferous ores, such as graphite, emery, and precious stones, the mechanical method is the only one available.

The advantage gained by separating two valuable minerals from each other lies in the fact that the mineral of less prominence is advanced from being of no value or even a positive detriment, to being a standard ore, salable to smelting works; while the mineral of more prominence has advanced in selling value from being a poorer grade of ore to being a better one, and commands a higher price in consequence.

To illustrate the advantage of smelting a concentrated ore over direct smelting, let us take an ore in the Cœur d'Alene containing 8.66% of lead and 4.33 oz. of silver per ton; cost of mining, $2.50 per ton; concentrating, $0.50 per ton; smelting, $14 per ton for mine ore and $7.50 per ton for concentrates; freight charges to Denver, Colorado, $8 per ton; 100 tons of ore concentrated into 17 tons; loss of metal in concentrating, 10.5% of the lead and 17% of the silver; in smelting mine ore, 10.0% of the lead and 3.0% of the silver; and in smelting concentrates, 5.0% of the lead and 3.0% of the silver. The account for treatment by direct smelting will stand:

Cr.	Mining 100 tons ore at $2.50 per ton	$250.00
	Freight on 100 tons ore at $8.00 per ton	800.00
	Smelting 100 tons ore at $14.00 per ton	1,400.00
	Total	$2,450.00
Dr.	Return from 15,588 pounds of lead at 3½ cents per pound	$545.58
	Return from 420 ounces of silver at 50 cents per ounce	210.00
	Total	$755.58
	Balance of loss	$1,694.42

The account for treatment by concentrating and smelting will stand:

Cr.	Mining 100 tons ore at $2.50 per ton	$250.00
	Concentrating 100 tons ore at $0.50 per ton	50.00
	Freight on 17 tons concentrates at $8.00 per ton	136.00
	Smelting 17 tons concentrates at $7.50 per ton	127.50
	Total	$563.50
Dr.	Return from 14,626 pounds of lead at 3½ cents per pound	$511.92
	Return from 348.6 ounces of silver at 50 cents per ounce	174.30
	Total	$686.22
	Balance of profit	$122.72

If there was no freight to be paid in either case, there would still be a loss of $894.42 on 100 tons of ore by direct smelting, while the combined processes would yield a profit of $258.72.

§ 3. Ore Dressing makes use of the physical properties of minerals and rocks; and the difference in behavior between the valuable and waste minerals affords methods for the separation of the former from the latter. Physical properties of interest in ore dressing are:

Hardness or softness.
Tenacity, brittleness or friability.
Structure and fracture.
Aggregation.
Color and luster.
Specific gravity and settling power.
Adhesion.
Greasiness.
Electro-conductivity.
Magnetic susceptibility.
Change in condition by heat from non-magnetic to magnetic.
Change in mechanical condition by heat from dense to porous.
Decrepitation by heat.

Some facts about these physical characters are given in the following pages. The properties that have most effect upon crushing will be taken up first.

Hardness or Softness. — Minerals differ greatly in their hardness, ranging from the hardness of the diamond to the softness of talc, their ability to scratch one another being considered the measure of hardness. The table of hardness adopted by Dana in his "Mineralogy" is as follows:

10 Diamond	8 Topaz	6 Feldspar	4 Fluorite	2 Gypsum
9 Sapphire	7 Quartz	5 Apatite	3 Calcite	1 Talc

Each mineral in the list can scratch all those below it. Hardness affects the wear of crushing machines — the harder the mineral the greater the wear. It does not necessarily affect the tendency of the minerals to produce fines or slimes in crushing.

Tenacity, Brittleness or Friability. — Some minerals, such as horn-silver, native copper, mica, talc, and gypsum, are very tough though they may at the same time be soft, and this makes them difficult to break. Some forms of hornblende and feldspar exhibit extraordinary toughness, although they are not very hard; other minerals are brittle and break up with comparative ease, as, for example, some varieties of quartz. A hard, brittle mineral will, when in agitation, make more fines or slime much more than one which is soft and tough.

Structure and Fracture. — The structure of a mineral tends to modify the shape of the particles resulting from crushing. Cleavable minerals may break into cubical blocks, as galena; into elongated fragments, as galena, feldspar, calcite, and sphalerite; into needle-like or thread-like shapes, as

asbestos; or into flat scales, as galena, mica, graphite, and talc. Granular minerals will drop naturally into separate rounded grains when broken up, as magnetite, garnet, and some varieties of galena. Minerals with massive structure, free from any special tendency to break in one more than in another direction, may have earthy fracture, as hematite; or conchoidal (oyster shell like), as pyrite crystal, quartz crystal, and obsidian. The shapes of these grains have an important bearing upon their power to settle in water or in air.

MINERAL AGGREGATION. — The valuable minerals may occur in pure masses, as in the banded vein structure and in pockets or vugs. They may also be in large crystals mixed with the waste minerals. Both these conditions are favorable for complete separation. On the other hand they may occur much intermingled with the waste minerals: either in granular structure, that is to say, rounded grains or small, compact crystals; or of an acicular structure, in long needle-like crystals, the valuable and waste minerals penetrating each other in all directions, to the eye a hopeless tangle; or, finally, of laminated structure, in thin layers alternately of good and worthless mineral. All of the latter structures add difficulty to the problem of ore dressing.

The physical properties that have most to do with separation will be considered next.

COLOR AND LUSTER. — These qualities are of the greatest value in hand picking. Slight differences in color or in luster — for instance, the brass yellow of chalcopyrite, the pale yellow of pyrite, the white of arsenopyrite, the vitreous luster of quartz, the resinous of sphalerite, the adamantine of diamond and cerussite, the dull of chalk, and the pearly of talc — furnish valuable aids in hand picking.

SPECIFIC GRAVITY. — The difference in specific gravity of minerals affords one of the surest means of separating them from each other. Specific gravity may be defined as the ratio of the weights of equal volumes of substances. For convenience, distilled water at 60° F. is usually taken as the standard of comparison. One cubic centimeter of quartz weighs 2.653 grams, while one cubic centimeter of water weighs 1 gram. One volume of quartz, therefore, weighs 2.653 times as much as one volume of water at 60° F. In like manner one volume of copper is found to be 8.8 times as heavy as one volume of water. The specific gravity of quartz is, therefore, said to be 2.653, while that of copper is 8.8.

We can go still further and compare the copper with the quartz, with the above figures as a basis, and divide 8.8 by 2.653, which gives 3.317, from which we conclude that one volume of copper is 3.317 times as heavy as one volume of quartz.

Liquids also vary in specific gravity. Ocean water is denser than fresh water; Great Salt Lake water is denser than ocean water. Unless some adverse condition is introduced, the denser the water the better will it serve for the separation of minerals.

A table of specific gravities of minerals taken from Dana's "System of Mineralogy," 1892, is given in the appendix, comprising minerals which are more or less apt to be present in the ore deposits of this country. A few artificial products are also included for convenience. Against many of the minerals two figures are given — thus, the specific gravity of quartz is said to be from 2.653 to 2.660, which shows that its specific gravity is not absolutely constant, but varies from one figure to the other.

As already stated, the differences in specific gravity of the minerals furnish the most valuable means for their separation, and this property may be employed in two different ways, namely, as affecting settling power, or as affecting momentum.

Settling Power of the Particles in Air, Water, or Other Media. — In general it may be said that of two particles of the same size and shape, the heavier will settle faster than the lighter, and of two particles of different specific gravities and the same settling velocity, that with the higher specific gravity will be of smaller diameter than the other. The ratio between these two diameters will have an approximately constant value under similar conditions, and these are called settling ratios.

Momentum. — When a particle is given a high velocity in a horizontal direction, the path it follows is called its trajectory. Of two particles of the same size and shape, the heavier will have the longer trajectory, and of two particles with different specific gravities but the same trajectory, that with the higher specific gravity will be of smaller diameter than the other.

ADHESION has its place in plate amalgamation. When clean particles of gold are coated with mercury and brought into contact with an amalgamated copper plate, the gold adheres to the plate, while the quartz particles with which the gold was associated do not adhere. The gold is thereby separated from the quartz. If the mercury is clean or pure the capillarity is concave or positive, like that of water, and the gold adheres strongly; if the mercury is "sick" or foul, the capillarity is convex or negative, and the gold is lost. It is purely a matter of capillarity and, therefore, belongs among the physical properties of the minerals.

Diamonds adhere to a greasy surface, while quartz does not, effecting thereby an economical separation.

GREASINESS. — This is the term used to express the tendency of minerals to float on the surface of water as if they were greasy. It is caused by the aversion of the surface of the particle to become wetted. The particle may carry an air bubble down with it, which later floats it to the surface, or its dry surface may prevent its sinking at all, the particle floating at the base of a little dimple or depression on the surface of the water. This causes much trouble in ore dressing. All minerals exhibit the tendency, but with some species it is very marked; for instance, in native copper, native gold, cassiterite, sphalerite, graphite, and some of the silver minerals. This property which until recently has been regarded rather as a difficulty to be overcome than as an aid to mineral separation is made use of in the various flotation processes such as the Elmore vacuum oil process, the Potter process, the Delprat process, and others. These processes usually make use of some substance: oil, acid, or chemical salt which increases the surface tension of the water and its specific gravity. In this way the effect of greasy flotation is greatly intensified and becomes subject to control. The details concerning the processes above mentioned and a complete discussion of the theory of the same will be found in a later chapter.

ELECTRO-CONDUCTIVITY. — The fact that some minerals are relatively good conductors, while others are relatively poor conductors, of electricity has rendered it possible to effect a commercial separation of two or more minerals by applying this principle. It has been found that the greater part of the sulphide minerals and the metals themselves are, in varying degrees, conductors of electricity, while the gangue minerals are, in general, very poor conductors. If, therefore, neutral ore particles are brought into contact with an electrode containing a static charge, the better conductors become similarly charged and are repelled, in the same way that pith balls would be under like conditions, while the poorer conductors are not repelled so far.

MAGNETIC SUSCEPTIBILITY. — The attraction to the magnet is quite strong in some minerals and metals, notably magnetite, some forms of pyrrhotite, cast iron, wrought iron, steel, nickel, and cobalt. Other minerals, such as

franklinite, chromite, serpentine, "blackjack" or iron-bearing sphalerite, garnet, etc., have very weak magnetism. Still others, such as quartz, calcite, gypsum, feldspar, etc., exhibit no attraction at all. By using properly constructed magnets this property may be made of great value, not only separating the magnetic from the non-magnetic, but those that are more magnetic from those that are less so.

CHANGE OF MAGNETISM BY HEAT. — Certain minerals, especially those of iron, when heated, lose oxygen, carbonic acid or sulphur, and are changed from being non-magnetic or only slightly magnetic to strongly magnetic. The magnet may then be employed for separating them from non-magnetic minerals.

CHANGE OF POROSITY BY HEAT. — Certain minerals, for example, pyrite, if heated gradually sufficiently high and for a sufficient time, part with some volatile ingredient, for example sulphur, and by becoming porous they change to a lower specific gravity, and can then be separated from minerals whose specific gravity was equal to theirs before the heating took place.

DECREPITATION. — Some minerals, when laid upon a hot plate, decrepitate or fly to pieces through the unequal expansion which overcomes the cohesion of the molecules. Calcite, fluorite, and barite are examples of this. A mineral which decrepitates may be separated from one which does not, by decrepitating and sifting; the latter mineral will be found on the sieve, while that which was finely decrepitated will have gone through.

THE USE OF SUPPLEMENTARY PRINCIPLES. — A process usually consists of two or more successive steps, in which the later is supplementary to the earlier. Thus, sorting in classifiers is followed by sizing on slime tables; and sizing by screens is followed by sorting on jigs. In each case the first step prepares the ore for the second, and the second supplements and completes the work which the first step was incapable of performing alone. Neither step is complete without the other.

The use of *graded crushing* and *graded separation* to diminish the amount of fines or slimes produced is quite frequently resorted to with brittle minerals.

§ 4. Ore dressing is divided into two parts, severing and separating:

1. *Severing or Detaching.* — The valuable minerals as they occur in the rock, are attached to waste minerals, and to sever the one from the other, the various steps of breaking, crushing, and comminuting are used.

2. *Separating.* — After the crushing has severed the valuable minerals from the waste, the two are still mixed together; and the true separation, which puts the good ore into the store bin and sends the waste to the dump, must then take place.

PART I.

PRELIMINARY BREAKING.

This part of the book takes up the preliminary or rougher methods of separating, severing, detaching, or unlocking the valuable minerals from one another and from the waste rock with which they are associated. This is performed by one or more of the following methods: blasting in the mine, calcining by fire, steam hammers, drop hammers, hand hammers, and rock breakers. The several operations and machines will be taken up somewhat in the order of sizes of rock which they treat, those which treat large lumps being, as a rule, considered earlier.

LIBRARY OF THE UNIVERSITY OF CALIFORNIA

CHAPTER II.

PRELIMINARY BREAKING.

Preliminary breaking is done by: blasting in the mine; calcining for friability, with or without quenching; by sledging, spalling, and cobbing hammers; steam and drop hammers; rock breakers; special forms of rolls; log washers; and wash trommels. The last two types of machines will be treated in Chapter X as they apply more directly to Preliminary Washing.

§ 5. Blasting in the Mine. — Though strictly speaking this operation lies outside the realm of ore dressing, it may be made to help or to hinder the concentration which follows, according to the manner in which it is conducted. For example, high-power explosives break the rock much smaller than those of low power, and lessen the work of the hammer and rock breaker very materially. On the other hand, if the valuable minerals are brittle, a high explosive may cause too large an amount of fines, leading to undue mine and mill losses. The occurrence of the ore in the vein is often in a pay streak of limited width, and when this happens the bore holes may be put in barren adjacent rock. With this precaution, the pulverizing effect of the high-power explosives may extend to barren rock only, and the advantage of breaking small be obtained from its use, without the disadvantage of pulverizing the ore. In deposits where the above precaution cannot be taken, and, as a result, an undue quantity of fines is being formed, a lower-power explosive may be resorted to as a cure for the evil.

§ 6. Calcining for Friability, with or without Quenching by Water. — When an ore is heated by fire the minerals are cracked and fissured in all directions by the unequal expansion, rendering them very friable, and if they are dropped into water when hot the effect is increased. This operation increases the capacity of the crushing machines which follow, but at the same time it increases the tendency to slime, and also the tendency of sulphides and other minerals to decompose in such a way as to affect the subsequent treatment, either favorably or unfavorably. An instance is recorded in which calcined quartz yielded 15% more slimes than untreated quartz, when crushed by stamps.

Breaking by Hammers, with or without Hand Picking.

§ 7. Hammers are used for breaking the lumps that are too large for the machine breakers; or to aid hand picking, by which clean ore is set aside for the smelter, and clean waste for the dump. Hammers of several kinds are used; sledges, spalling hammers, cobbing hammers, steam hammers, and drop hammers.

§ 8. Hand Sledges. — These are two-hand hammers and are used in all mining regions for sledging, ragging or breaking the larger rocks to bring them to a size which will enter the jaws of the machine breaker. Where the valuable mineral cleaves from the waste rock in compact, rich fragments of sufficient size, hand picking accompanies this work.

Two chief types of hammers appear to find favor; those with beveled edges are shown in Fig. 1; those with sharp edges are shown in Fig. 2. One hammer with a sharp pean running at right angles to the handle is shown in Fig. 3.

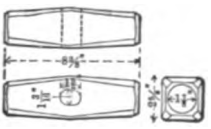

FIG. 1.

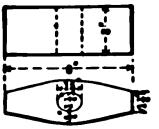

FIG. 2.

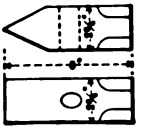

FIG. 3.

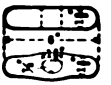

FIG. 4.

The advantage of two faces on a hammer is that it can be used twice as long before it has to be re-faced. The claim for the sharp-edged face is that a skillful operator can cleave the rock with the edges and thus effect a more perfect separation of the valuable mineral from the waste. To maintain the edges, these hammers have to be faced up more often than those with beveled edges. The sharp pean, set at right angles to the handle, has the advantage that cleavage strokes of great accuracy can be made with it. Some managers claim that the skill of the workman is all-important, and that the shape of the hammer, whether square-faced or beveled, is a matter of indifference. Others, maintaining the virtues of the square face, dissent from the latter proposition, while

TABLE 1. — SLEDGES USED IN THE MILLS.

Locality.	Face.	Weight, Pounds.	Length of handle, Inches.	Shown in Fig.
Eustis, P. Q.	Sharp edges	12 to 16	28	2
Aspen, Colorado	Sharp edges and sharp pean	12	32	3
Cœur d'Alene, Idaho	Beveled edges	12	34	1
Butte, Montana	Beveled edges	{ 10 for soft rock / 16 for hard rock	36	1
Lake Superior, Michigan	Sharp edges	12½	34	2
Silverton, Colorado *	Beveled edges	10	30	1

* 12,000 feet above sea level.

they agree to the former. Table 1 gives some sizes and forms of sledges, and the localities in which they are used.

It is noteworthy that the lightest sledge recorded (10 pounds) is used in the light air of a very high altitude — 12,000 feet above sea level. It will be noticed that the miner at Butte uses a lighter hammer for soft rock and a heavier one for hard rock. For breaking up large rocks a sledge hammer usually weighs from 16 to 20 pounds and sometimes as much as 30 pounds.

Handles range in gross length from 28 to 36 inches. As a general principle, the longer the handle the greater the speed of the blow, but beyond 36 inches the heavy sledges become unwieldy.

In most mills where sledges are used, they serve only to facilitate hand picking, the principal part of the breaking being done by machine; but at some plants all of the breaking is done by hand. The operation of breaking with sledge hammers is known in Cornish practice as "ragging."

§ 9. SPALLING HAMMERS. — These are two-hand hammers, but are much lighter than sledges; and the operation of spalling is the breaking of moderate-sized lumps down to a uniform size, with swift, light blows; for example, bringing pyrite down to a suitable size for kiln roasting, with the minimum production of fines. The spalling hammers shown in Fig, 4 are of two sizes, which weigh 2 and 3 pounds respectively, each of which has a 27-inch handle. The larger hammer is of 1⅜-inch, the smaller of 1¼-inch, square steel, expanded

at the eye for strength. Each is 6 inches long and the faces are rounded almost to a hemisphere, and with them 5-inch cubes are broken to 2 inches in size. Spalling hammers vary in weight from 2 to 6 pounds. What appears to be the best form of handle for a spalling hammer is much smaller in the middle than at the ends. It is 30 to 36 inches long, about 1½ inches thick at the hand end, about 1 inch thick at the hammer end, but shaved down to ¾ inch for a distance of 10 inches, beginning 6 inches from the hammer. Such a handle has withstood five months of constant use by a careful man while the average life of an ordinary handle is scarcely four days. In addition to increasing the life of the handle, the flexibility saves shock to the workman's hands.

The capacity of a man for spalling is given by the authorities as follows:

	Pounds per hour.	Material.	Size of product.
Linkenbach	1,450	Ordinary sulphide ore	6 inches
Peters	1,400	Ordinary sulphide ore	2½ inches
Rittinger	250 to 625 (2½ to 6¼ cubic feet).	Average ore	2½ inches

§ 10. COBBING HAMMERS. — These are small one-hand hammers, and the object of cobbing is to cleave and to hand-pick the good ore from the refuse. The cobber generally sits at his work. A good form of cobbing hammer has at one end a sharp wedge-shaped pean placed either parallel to or at right angles with the handle; and at the other end, a flat face with sharp edges; and weighs from 1.5 to 7 pounds. The flat face is used for the harder strokes, the sharp pean for the finer work. The sharp-edged pean at right angles to the handle has the advantage that one can strike a truer blow, and cleave the good ore from the refuse more perfectly. The pean parallel to the handle has the advantage that the fragments fly to right and left instead of toward and away from the operator. Various sizes of hammers, quoted from different authors, are indicated in Table 2.

TABLE 2. — HAMMERS QUOTED FROM AUTHORS.

	Sledging.		Spalling.		Cobbing.	
	Weight. Pounds.	Handle length. Inches.	Weight. Pounds.	Handle length. Inches.	Weight. Pounds.	Handle length. Inches.
Foster	10 to 12	.....	4 or 5	.....	.....	.....
Gaetzschmann	8 to 12*	.....	3 to 4, 5 to 8 for toughest rock.	.....	1½ to 2 for soft rock. 3 to 4 for hard rock.	10 to 12
Hâton de la Goupillière	.....	.....	3½ to 4½	About 43	2.2 to 2.6	.....
Linkenbach	8	36	.....	.....	About 3.5	About 12
Louis	.....	.....	3	30	.....	.....
Peters	.....	.....	2¼	.....	.....	.....
Rittinger	8	.....	3 to 4	30 to 36	2 to 4	.....

* Sometimes as light as 6 pounds.

§ 11. STEAM HAMMERS of large size were formerly used in the Lake Superior region. These hammers weighed a ton or more and were lifted and forced downward by steam cylinder and piston, in the same manner as large forging hammers. For convenience, the anvil was placed on a level with the floor to facilitate the placing of rock masses and the removal of the fragments. The use of higher power explosives in the mine, and of larger rock breakers in the rock houses has done away with this machine.

A small steam hammer, made by William Sellers & Co., is sometimes used in the rock houses at Lake Superior for cleaning mass copper from adhering

rock. The cylinder is 10 inches in diameter, with stroke 18 inches long. The steam pressure is 60 pounds per square inch; the number of strokes is 144 per minute, more or less, and it consumes about 8 horse-power. The weight of the striking part is 400 pounds. The anvil weighs about 3,000 pounds. The shoe is made of gray cast iron, which lasts 90 days and is more durable than chilled cast iron. Three men working with this hammer, can dress one ton of mass copper per hour.

§ 12. DROP HAMMERS, operated on the principle of a pile driver, are used to a considerable extent in the rock houses of the Lake Superior district for breaking large lumps and cleaning mass copper preparatory to smelting. The hammer is lifted between guides by a rope, an overhead sheave, and a winding drum. When at the top, the drum is released and the hammer falls, unwinding the rope as it goes down. The hammer has a shoe in the form of a truncated cone. The die is supported upon heavy foundations to withstand the shock, and is placed on a level with the floor for convenience in bringing masses of rock and removing the resulting fragments. The shoe and die are replaceable when worn out. Details of drop hammers are given in Table 3.

TABLE 3. — DROP HAMMERS.

Entire Hammer.			Shoe Alone.				Drop. Feet.
Length. Feet.	Diameter. Inches.	Weight. Pounds.	Height. Inches.	Top Diameter. Inches.	Bottom Diameter. Inches.	Weight (about). Pounds.	
7	12	2,000	12	12	8	250	6
.....	.....	3,000	.....	.....	.....	.....	6 to 20
7	12	2,000	12	12	8	250	6

§ 13. ADVANTAGES OF HAND BREAKING. — Breaking by hand is more expensive than by machines if any considerable quantity of work is being done; but if the enterprise is temporary or on a small scale, or if the valuable mineral is of high value, or cleaves in compact, clean lumps, hand work may be the cheaper. The cost of breaking by hand and picking may range from 8 to 25 cents per ton.

Hand breaking makes much less fines than breaking by machine; and with certain classes of ores, for example preparing pyrite for making sulphuric acid, this has at times been considered a sufficient gain to offset the advantage of the cheaper machine work. Hand breaking has the important additional advantage of intelligence — it severs the different minerals from each other in a manner most favorable for making clean products by hand picking.

The relative proportion of fines is shown by a test of 2,220 tons of average copper ore, half of which was broken by hand, and half by a breaker set at 64 mm. opening, everything smaller than 6 mm. having been first screened out. The proportions of coarse to fine made by the operations were as follows:

	By Hand.	By Breaker.
Through 64 mm. on 6 mm.....	90.69 percent.....	82.68 percent.....
Through 6 mm.....	9.31 percent	17.32 percent.....

showing that the breaker produced nearly twice as much fines as the hammer.

The advantage of the intelligence that is coupled with hand breaking, over the mere mechanical breaking done by machines, is shown by a test where 49% of clean products was picked out in connection with the former, while only 17% was picked out in connection with the latter.

The question as to whether hand or machine breaking is preferable in any given case must be decided, of course, by the net profit.

ROCK BREAKERS.

§ 14. The word "breakers" should be used for all machines breaking to relatively large sizes while we may designate as "crushers" all the other varied machines which may be employed to further comminute the ore after it has received its preliminary or coarse breaking such as, rolls, Chili and Huntington mills, grinding pans, pulverizers, disintegrators, etc.

§ 15. Rock breakers as a rule, constitute the first step in systematic crushing for mill work. They all act upon the principle of approaching and receding jaws which break the rock. They are fed with ore of mixed sizes up to the maximum diameter that the mouth or receiving opening can take, and they break it to a uniform maximum size, which latter is determined by the distance apart of the jaws at the throat or discharge opening. Since the large size and irregularity of the feed rock generally precludes automatic feeding, in small plants they are often fed by hand or by shovel, in many cases by chute sloping from the bottom of a bin, the attendant easily pulling forward the ore in the chute by a rake or hoe. Sometimes in larger mills they are fed by a pan or belt conveyor which runs level below the toe of one or several bins and then elevates the ore sufficiently for it to fall directly into the breaker mouth. The latter arrangement saves all hand lifting of the ore and the breaker requires but little attention. One man is required to keep the ore flowing from the bin, pick sticks of wood or pieces of iron from the ore on the conveyor, and watch the breaker. In case of accident to the breaker the conveyor, and through it the feed, can be instantly stopped.

For coarse breaking the Blake and Dodge type of jaw breakers and the Gates or McCully gyratory breakers have stood the test of time and are still standard. If anything the gyratory breakers have found more favor, especially where a large breaking unit is desired.

There are two chief classes of machines:

I. The jaw breakers, which are intermittent machines.

II. The spindle or gyrating breakers, which are continuous machines.

I. — Jaw Breakers.

The jaw breakers are divided into three types according to the movement of the jaw:

(*a*) Those which are pivoted above so as to give the greatest movement on the smallest lump. Blake type.

(*b*) Those which have an equal movement on all sizes.

(*c*) Those which are pivoted below and have the greatest movement on the largest lump. Dodge type.

(*a*) jaw breakers with greatest movement on smallest lump.

§ 16. The Blake Breaker, as finally adopted by its inventor, Mr. Eli Whitney Blake, was the first successful jaw breaker, and it has held its place as the standard machine ever since. The original form, patented June 15, 1858, gave the greatest movement at the mouth. "The inventor quickly saw that for rapid crushing of rock the conditions of movement of jaw should be reversed, — that the lower part of the crushing face should have the greatest movement." The standard form which is in the catalogues of all manufacturers, has the greatest movement on the smallest lump.

The Blake breaker as shown in sectional elevation in Fig. 5*a* and in plan

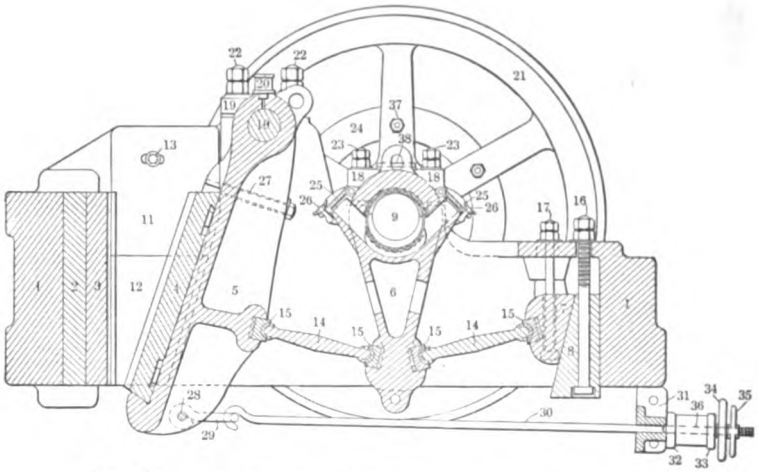

FIG. 5*a*. — SECTIONAL VIEW OF BLAKE-TYPE BREAKER.

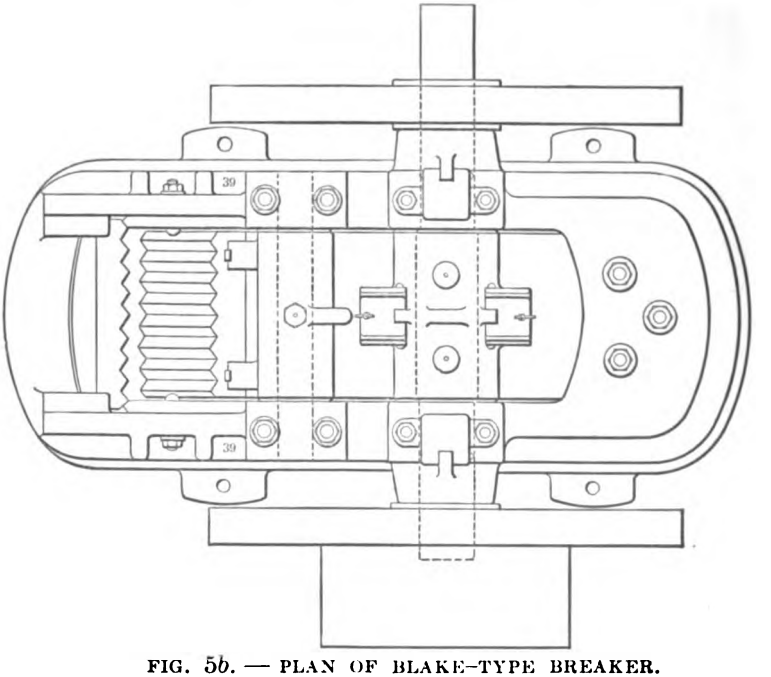

FIG. 5*b*. — PLAN OF BLAKE-TYPE BREAKER.

KEY TO FIGS. 5*a* AND 5*b*.

1. Main frame.
2. Round back.
3. Fixed jaw plate.
4. Swing jaw plate.
5. Swing jaw.
6. Pitman.
7. Toggle block.
8. Wedge.
9. Eccentric shaft.
10. Swing jaw shaft.
11. Upper half cheek plate.
12. Lower half cheek plate.
13. Bolt for cheek plate.
14. Toggle.
15. Toggle bearing.
16. Bolt for wedge.
17. Bolt for toggle block.
18. Cover for main bearing.
19. Cover for swing jaw shaft.
20. Grease cup.
21. Balance wheel.
22. Bolt for swing jaw shaft cover.
23. Bolt for main bearing.
24. Pulley.
25. Grease-box cover.
26. Bolt and thumb screw.
27. Bolt for swing jaw plate.
28. Shackle pin.
29. Spring rod shackle.
30. Spring rod.
31. Spring bar.
32. Washer.
33. Washer.
34. Hand wheel.
35. Thumb nut.
36. Rubber spring.
37. Bolt for pulley.
38. Grease-box cover on main bearing.
39. Frame.

in Fig. 5*b* is made up of the parts described as follows: The main frame 1 (Fig. 5*a*) is made of cast iron or cast steel strongly ribbed, amply thick, and massive enough to resist great stresses and shocks. This main frame is bolted to the solid foundation which is usually made of heavy timbers or concrete, the latter being preferable. Upon the top of the frame are the boxes for the swing-jaw shaft 10, and the eccentric shaft 9. At the rear a horizontal web is cast to the main frame 1, for the support of the wedge 8, and toggle block 7. The round back 2 is held against the front end of the main frame 1 by the fixed jaw plate 3 in turn held in its place by the lower half cheek plates 12 which are wedge shaped and are driven to a bearing between the fixed jaw plate 3 and recesses in the frame 39. (See Fig. 5*b*.) Cheek plates 12 are held down by upper half cheek plates 11 which are square and are in turn held in place by the bolts 13. Chilled cast iron with longitudinal 90° corrugations appears to be the most usual material and form for the jaw plates 3 and 4.

The swing jaw 5 is of steel and is held to its shaft 10 by a gib and key bolt. It is furnished with a jaw plate 4, which is held by dovetails and by bolts 27 to the swing jaw 5. At the rear of the swing jaw 5 is a steel toggle bearing 15, and near the bottom is a shackle pin 28 and spring rod shackle 29 connecting with the spring rod 30.

The pitman 6 is of steel and is suspended from the eccentric shaft 9 with bearing surfaces of babbitt metal above and below. It is made very strong to resist great tensile stress and has two steel toggle bearings 15. The toggle block 7, supported by the bolt 17, is also furnished with a steel toggle bearing 15. The wedge 8 is elevated or depressed by the bolt 16. The two toggles 14 are supported by the toggle block 7, the pitman 6, and swing jaw 5, respectively.

The two spring rods 30 are furnished with rubber springs 36 which are held in compression between washers 32 and 33 against the spring bar 31. Any loose motion is taken up by hand wheel 34 which is held secure by thumb nut 35. The four toggle bearings 15 are furnished with oil tubes and these, together with all oil holes and grease boxes about the breaker, are provided with covers or caps to prevent grit and dirt from wearing out the bearings. The breaker is provided with a cover or housing extending for the full width of the machine from the swing-jaw shaft 10 to the main frame 1 at the rear, thus protecting the pitman 6 and toggles 14 from injury and also shielding these parts to some extent from dust. The heavy fly-wheels 21 are attached to the eccentric shaft 9 by keys, and the pulley 24 is bolted to one of the fly-wheels by bolts 37.

The eccentric shaft 9 runs in a packed box the oil being supplied through the grease boxes whose covers are numbered 25 in the cut and which are securely held in place by the bolts and thumb screws 26.

The receiving space is called the *mouth* and is measured by the width of the jaw plates, that is to say, the distance between the cheek plates; and by the gape or opening, that is to say, the distance between the tops of the jaw plates. The discharging space is called the *throat* and is measured by the width of the jaw plates and the opening between the jaws when they are farthest apart.

§ 17. Selection of a Blake-type Breaker. — In selecting a breaker of this type, care should be taken to see that the main frame is quite massive to stand the shock and stresses, and work steadily and that to all outward appearances it is a clean good casting as a defect in casting materially weakens the frame and it is quite hard to make such a large and irregular casting without flaws which may not, of course, be visible. A breaker should also be of little height for the nearer it is to the foundation the more stability it has. It should be of ample size to take the largest lump. Its action should be

simple and its wearing parts accessible and easily removed. There must be no possibility of contact of oil with the ore. Jaw breakers need heavy fly-wheels. All breakers need a cheap breaking point and the bolts which hold the cap of the pitman are recommended as the best breaking points for jaw breakers. The lugs on the back of the breaker for supporting the toggle wedge should be rather thicker than would at first seem necessary so that there can be no chance of their breaking off. Pieces ought to be cast upon each side of the toggle boxes to keep them in alignment, thus preventing wear on the breaker frame, and cheek plates should always be supplied for the same purpose.

It is well to have a wrought-iron or steel piece bolted to the bottom of the movable jaw to support the steel or chilled-iron jaw plate. This prevents, to some extent, the excessive wearing away of the soft iron lip which is usually provided with breakers. It is often advantageous to have the movable jaw provided with a readily replaceable box in the upper end of the movable jaw itself, with the shaft bolted stationary on either side of the breaker frame.

§ 18. *Operation and Adjustment.* — The operation of the machine is as follows: As the eccentric lifts the pitman it straightens out the toggles, lengthening the distance between their outer ends. This forces the swing jaw to approach the fixed jaw, breaking the rock. When the eccentric lowers the pitman, it unlines the toggles and the swing jaw is free to recede from the fixed jaw. It is forced to do so by the rubber spring and it then allows the broken rock to slide down to a new bearing preparatory for the next nip.

The power is brought by a belt to the pulley and is consumed by the breaking of rock for a period slightly less than one-half a revolution, because it required an instant of time to settle the rock to a bearing against the jaws. During the other one-half revolution the power is being accumulated in the fly-wheels. Hence its action is intermittent.

When, by the wear of the jaw plates, the space at the throat becomes too great and the broken rock too coarse, the jaws can be brought nearer to each other by raising the wedge by means of its nut. When the wear is too great for this adjustment to be effective, longer toggles can be used, care being taken to choose them of lengths to keep the pitman vertical. Later, the jaw plates may be inverted and the whole thing repeated, and finally, new jaw plates must be provided.

§ 19. *Details of Capacities, Power, and Sizes.* — Table 4 shows the details of some of the different sizes of Blake-type breakers as manufactured. These figures are taken from one manufacturer's catalogue and, although they represent a great range of sizes, the breakers of other manufacturers are often of slightly different sizes so that it is possible to get a breaker of almost the exact mouth opening desired.

The capacities as stated in the list are approximate, and are based on a rock or ore that is hard and friable, diligently fed, and that will clear itself quickly at the outlet. Hard rock that breaks with a snap breaks faster than sandstone. The capacity varies with the number of revolutions per minute and the speed varies considerably in the mills — from 50 to 500 with an average of between 275 and 300 revolutions per minute. The horse-power required to drive the breakers varies somewhat according to the character of the material and the size to which it is broken but that given in the table seems to be fair and conservative and is equivalent to:

5½ to 12 tons per horse-power per 24 hours, crushed to 1 inch. **Average 8.**

12 to 15 tons per horse-power per 24 hours, crushed to 1½ inches. **Average 13.**

13 to 20 tons per horse-power per 24 hours, crushed to 2 inches. **Average 16.**

17 to 20 tons per horse-power per 24 hours, crushed to 2½ inches. Average 19.

18½ to 24 tons per horse-power per 24 hours, crushed to 3 inches. Average 21½.

27 to 30 tons per horse-power per 24 hours, crushed to 4 inches. Average 28½.

TABLE 4. — CAPACITIES, POWER, AND SIZES OF BLAKE BREAKERS.

(Data from Catalogue.)

Abbreviations. — H. P. = horse-power; In. = inches; Ft. = feet; Rev. = Revolutions.

Mouth Size.	Approximate capacity in tons per day of 24 hours to sizes stated.				Size of Pulley.	Rev. per Minute.	H. P. required	Total Weight.	Weight of Heaviest Piece.
In.	Tons. In.	Tons. In.	Tons. In.	Tons. In.	In.			Pounds.	Pounds.
6 x 2	26 to 2	11 to 1	4 to ½	.....	5 x 1	300	½	100	40
10 x 4	92 to 2	65 to 1½	39 to 1	.....	11 x 4	300	2	1,200	560
10 x 7	120 to 2	96 to 1½	60 to 1	.....	20 x 6½	300	5	4,660	2,700
20 x 6	240 to 2	180 to 1½	144 to 1	84 to ½	20 x 7½	300	8	8,000	4,000
16 x 10	288 to 2½	240 to 2	192 to 1½	144 to 1	30 x 7½	300	12	11,000	6,000
20 x 10	480 to 3	406 to 2½	360 to 2	240 to 1½	30 x 9	300	15	16,400	8,700
24 x 13	720 to 3	600 to 2½	480 to 2	360 to 1½	30 x 12	300	20	19,400	9,900
24 x 15	900 to 4	780 to 3½	.....	.....	42 x 13	300	30	29,000	14,500
30 x 13	720 to 2½	600 to 2	480 to 1½	.....	42 x 13	300	30	29,000	14,500
30 x 15	1,200 to 5	1,080 to 4	900 to 3	.....	2—36 x 12	300	40	37,000	20,000
36 x 18	1,200 to 3	1,080 to 2½	960 to 2	.....	2—36 x 12	300	40	37,000	20,000
36 x 24	2,400 to 6	2,040 to 5	.....	.....	2—42 x 13	300	65	57,500	27,500
36 x 24	1,440 to 3	.....	.....	.....	2—42 x 13	300	65	59,000	28,500
					2—48 x 15	300	75	75,000	35,000

The information given in Table 5 is taken from the most modern practice and a comparison is there made with the figures as given in the catalogues. The catalogue figures have been changed to correspond with the actual figures by applying Rittinger's principle that the power required in crushing varies directly as the fresh surface area exposed. This principle is thoroughly explained under the Laws of Crushing in Chapter VII and by means of it, in connection with the information at hand, the student should be able to solve many problems in power required for breaking which would otherwise be rather difficult.

TABLE 5. — POWER REQUIRED BY BLAKE BREAKERS TO BREAK FROM VARIOUS SIZES TO 1-INCH CUBES.

Feed.		Product.	Capacity.	Horse-Power
Nature.	Maximum Cubes in Inches.	Maximum Cubes in Inches.	Tons per Hour.	Required.
Sulphide-bearing quartz and rhodochrosite. (Softer than average)..	2.5	1.0	7.5	12.37
Catalogue. (Average)	2.5	1.0	3.5	4.5
Sulphide-bearing quartz. (Softer than average).....	4.0	1.0	8.0	20.0
Catalogue. (Average)	4.0	1.0	2.5	6.0
Sulphide-bearing quartz. (Quite easily crushed).....	4.8	1.0	10.0	9.0
Catalogue. (Average)	4.8	1.0	6.0	12.0
Sulphide-bearing granite. (Harder than average).....	5.0	1.0	21.0	25.0
Catalogue. (Average)	5.0	1.0	15.0	20.0

It is readily seen from the table that the catalogue figures as given in Table 4 are conservative and can be safely used when figuring on rocks or ores of the nature stated.

By far the most common size of mouth opening in the Blake-type breakers uesd in modern mills is 20 × 10 and 15 × 9 inches. Sometimes water is added with the feed as will be explained later, but this is not common practice. Often

the coarse or preliminary breaking in the mills is carried on only during one shift while the remainder of the plant operates two or three shifts.

§ 20. *Material, Life, and Cost of Wearing Parts of Blake-type Breakers.* — It must be thoroughly understood that it is along this particular line that the brittleness or toughness of the ore handled as well as its hardness has the most direct effect, as the repairs on a breaker may make a bill which compares quite closely with the cost of power or one-half the labor cost of breaking. This repair bill may vary at different mills from nothing up to $150 or $200 a year, although on the average ore with intelligent manipulation the bill should be very small. It must also be borne in mind that the material used in the wearing parts of a breaker working on one ore might be wholly unsuited for the same breaker handling a different one.

Foreign manufacturers advise the universal use of chilled cast iron for all parts subjected to wear and tear, viz., jaw plates, cheek plates, toggle plates, etc. This material has the advantage of being very hard to a certain depth and then gradually softer. The hard part therefore bears practically on an elastic support, whereby a great resistance is attained. American manufacturers, however, are inclined to specialize somewhat, and, while they recognize the many advantages of chilled cast iron, they often advise the use of some special steel or iron for the various wearing parts. This does not come from a desire to sell the higher priced special steels but from actual results obtained by a comparison of the wear of various materials on the same ores. Jaw plates made of manganese steel are considerably lighter than those made of chilled cast iron, the former being reinforced by ribs. The special steel jaw plates are also made in two or three sections so that when the bottom piece becomes worn it may be interchanged with the next one above, thereby enabling the whole to be worn quite thin. The cost per pound for the special hard-steel jaw plates is higher than that for chilled cast-iron jaw plates, but as the former are much lighter than the latter, the price per piece is approximately the same for both kinds. The following information has been gathered by the author from various mills and is given in very condensed form.

Jaw plates have been used which were made of white iron, manganese steel, chrome steel, chilled franklinite iron, chilled cast iron, cast steel, and cast iron. The relative value of each for this purpose is about in the order given, the first named being the best. The cost, including the labor required in making the changes and the purchase price minus the selling price of the scrap, varies from 0.183 to 4.50 cents per ton of ore broken, with an average of about 0.78 cent. They handle from 112,500 to 720 tons of ore during their life with an average of about 14,000 tons. For modern usage chilled cast-iron jaw plates, made of the best cold-blast charcoal iron, are recommended unless the peculiar character of the ore under treatment requires manganese or other special steels.

Cheek plates made of manganese steel, chrome steel, steel, chilled cast iron, and cast iron have been used and they have relative values in about the order named, the first named being the most desirable. The cost, including the labor required in making the charges and the purchase price minus the selling price of the scrap, varies between 0.0105 and 0.48 cent per ton of ore broken, with an average of about 0.115 cent. They handle from 112,500 to 2,250 tons of ore during their life with an average of about 16,000 tons. High-grade open-hearth steel which is tough and hard to withstand the wear, and at the same time is not brittle, is recommended as best suited for cheek plates under ordinary conditions.

Toggles have been manufactured of chilled cast iron, cast iron, cast steel, soft iron, malleable cast iron, and white iron having relative values in about the order named, the first named being best suited for the purpose. The cost,

including the labor required in making the changes and the purchase price minus the selling price of the scrap, ranges from 0.0075 to 0.102 cent per ton of ore broken, with an average of about 0.046 cent. They handle between 78,000 and 4,360 tons of ore during their life with an average of about 28,000 tons. Best chilled cast charcoal iron is recommended as the proper material to use for toggles and the cheapest in the end.

Toggle bearings have been used made of steel, manganese steel, cast iron, chilled cast iron, machinery steel, wrought iron, chrome steel, and brass, the first named having the highest relative value for the purpose and the remainder grading downwards approximately in the order named. The cost, including the labor required in making the changes and the purchase price minus the selling price of the scrap, varies from 0.00098 to 0.18 cent per ton of ore handled, with an average of about 0.053 cent. They handle from 96,000 to 4,000 tons of ore during their life with an average of about 29,500 tons. Best open-hearth steel is now recommended, under ordinary conditions, for toggle bearings.

The life of wearing parts depends not only on the nature of the ore, but also upon the handling of the breaker. It is not necessary to fix the jaws in the breaker by means of screws, but the space between the jaw plates and the jaws should be filled with hard lead or zinc.

Table 6 gives details as to life, etc., of the wearing parts of Blake-type breakers in use in the mills. Only such figures are given as show relative values of the various wearing parts on the same ore and in the same mill. The higher priced metals have longer life than chilled cast iron, and in consequence, the charge against changing the parts is reduced, as it occurs less often.

TABLE 6. — WEARING PARTS OF BLAKE-TYPE BREAKERS.

ABBREVIATIONS.—C. I. = cast iron; C. P. = cheek plates; Cd. S.=Canda steel; Ch. I. = chilled iron; Chr. S. = chrome steel; F. J. P. = fixed jaw plates; G. Q. B. = good quality babbitt; J. P. = jaw plates; M. S. = manganese steel; P. B. = babbitt for pitman; S. = steel; S. J. P. = swinging jaw plates; T. = toggles; T. B. = toggle bearings; T. R. = tension rod; Wh. I. = white iron.

Wearing Part.	Material.	Total Weight in Pounds.		Actual or Estimated Maximum Life.		Wear per Ton in Pounds.		Costs Cents per Pound. New.	Sells Cents per Pound. Old.	Cost per Ton in Cents.		Remarks.
		New.	Old.	Days.	Tons.	Gross.	Net.			Gross.	Net.	
F. J. P.	M. S.	1,660	1,385	135	56,600	0.02930	0.00486	13.15	0.68	0.3860	0.3720	Working on soft sulphide-bearing quartz in Mexico.
F. J. P.	Cd. S.	323	274	19	10,400	0.03105	0.00471	10.50	0.68	0.3260	0.3080	
S. J. P.	M. S.	1,340	1,128	135	56,600	0.02340	0.00378	13.15	0.68	0.3110	0.2980	
S. J. P.	Cd. S.	293	247	19	10,400	0.02820	0.00442	10.50	0.68	0.2960	0.2940	
J. P.	M. S.	441	140	60	1,440	0.30600	0.20900	10.00	0.00	3.0600	3.0600	Working on sulphide-bearing hard trap-rock and quartz in California.
J. P.	Chr. S.	441	140	45	980	0.45000	0.30700	10.00	0.00	4.5000	4.5000	
J. P.	Wh. I.	441	140	30	720	0.61200	0.41800	2.50	0.00	1.5300	1.5300	
J. P.	M. S.	468	140	104	12,000	0.03900	0.02700	10.00	0.35	0.3900	0.3900	Working on sulphide-bearing solid quartz and slate in California.
J. P.	Chr. S.	468	140	65	7,500	0.06200	0.04400	8.00	0.35	0.5000	0.4900	
J. P.	Ch. I.	468	140	26	3,000	0.15600	0.10900	6.00	2.00	0.7800	0.6900	
J. P.	Chr. S.	400	300	120	15,000	0.02600	0.00700	.....	.....	.....	.....	Working on sulphide-bearing quartz, barite, calcite, and rhodochrosite in Colorado.
J. P.	Ch. I.	400	300	80	10,000	0.04000	0.01000	8.00	0.50	0.3200	0.3000	
C. P.	S.	63	30	135	56,630	0.00111	0.00058	8.75	0.68	0.0097	0.0094	Working on soft sulphide-bearing quartz in Mexico.
C. P.	M. S.	90	72	130	15,000	0.00600	0.00100	10.00	0.35	0.0600	0.0580	Working on sulphide-bearing solid quartz and slate in California.
C. P.	Chr. S.	90	72	78	9,000	0.01000	0.00200	8.00	0.35	0.0800	0.0770	
C. P.	Ch. I.	90	72	21	2,250	0.04000	0.00800	6.00	2.00	0.2400	0.1600	
C. P.	Chr. S.	80	60	180	22,500	0.00400	0.00100	.....	.....	.....	.....	Working on sulphide-bearing quartz, barite, calcite, and rhodochrosite in Colorado.
C. P.	Ch. I.	80	60	120	15,000	0.00500	0.00100	8.00	0.50	0.0430	0.0410	
T.	C. I.	70	70	.....	.....	0.00000	0.00000	7.20	0.68	0.0000	0.0000	Working on soft sulphide-bearing quartz in Mexico.
T. B.	C. I.	26	0	180	96,000	0.00027	0.00027	4.30	0.68	0.0012	0.0010	
T. R.	S.	51	0	130	57,920	0.00088	0.00088	8.00	0.68	0.0070	0.0064	
P. B.	G. Q. B.	22	0	90	47,500	0.00046	0.00046	45.00	0.00	0.0208	0.0208	

The approximate prices per pound and the quality of the various metals

used for wearing parts are given in Chapter III, but it should be remembered that the tendency of chilled iron to become pitted when used for roll shells does not affect it adversely for the wearing parts of breakers and that the quality of manganese steel, that it does not fully return to its form after expansion by heat and work, will be no disadvantage in jaw breakers but may cause difficulty in spindle breakers.

Table 7 gives some average figures of gross cost of jaw plates made from various materials and used on Blake-type breakers.

TABLE 7. — COMPARATIVE WEAR OF METALS FOR JAW PLATES OF BLAKE-TYPE BREAKERS.

	Average of	Gross Cost of Metal per Ton.
Chrome steel	6	1.483 cents *
Cast iron (probably chilled)	2	0.354
Manganese steel	5	0.963 †
White iron	1	1.53
Chilled iron	10	0.356

* This figure is unfavorably influenced by one very high figure which, when omitted, reduces the average to 0.879 cents.

† This contains one very high figure which if left out would reduce the average to 0.464 cents.

The figures in Table 7 do not quite fairly represent the relative costs for the following reasons: Mills breaking soft ores, as the Missouri limestones, are all given chilled cast-iron jaw plates, while mills with a hard, tough ore to treat, use one of the steels. If the applications were reversed, it is probable that costs given for the steels would be greatly reduced, and that for chilled cast iron proportionately increased.

§ 21. LARGE VERSUS SMALL BREAKERS. — As a rule, the breakers are run far below their capacity and for a few hours only out of the twenty-four.

The advantages of a large breaker are that it saves cost of sledging; that it will do its day's work in a short time and leave the attendant free for other work, thus saving labor. The disadvantage is, that it costs more at the start and requires more power but it does not on that account consume more power per ton. The cost of breaking and repairs is also less with one large breaker than when using several smaller ones.

§ 22. QUALITY OF WORK OF BLAKE-TYPE BREAKERS. — The following sizing test is given on the product of a Blake-type breaker, with a 15 × 9-inch mouth opening, set to break run of mine ore, containing dolomite with disseminated galena, to a maximum size of 1.5 inches:

	Percent.		Percent
On 1.25 inches	51.2	Through 4.0 millimeters on 1.0 millimeter	4.4
Through 1.25 inches on 0.875 inch	16.7	" 1.0 " " 0.25 "	0.4
" 0.875 " " 0.625 "	7.3	" 0.25 "	1.1
" 0.625 " " 0.375 "	7.9		
" 0.375 " " 0.25 "	6.2	Total	100.0
" 0.25 " " 4.0 millimeters	4.8		

The two following sizing tests were made on Blake-type breakers fed with a hard, close-grained granite having a compressive strength of about 30,000 pounds per square inch. It was fed in lumps as large as the machine would take.

Mouth Openings in Inches.	10 x 4 Percent.	10 x 7 Percent.
On 2.5 inches	7.0	6.5
Through 2.5 inches " 2.0 "	10.0	23.0
" 2.0 " " 1.5 "	23.0	21.1
" 1.5 " " 1.0 "	23.2	17.8
" 1.0 " " 0.75 "	6.4	4.8
" 0.75 " " 0.50 "	9.9	7.9
" 0.50 " " 0.25 "	8.7	8.2
" 0.25 " " 0.125 "	4.5	4.1
" 0.125 "	7.3	6.6
Totals	100.0	100.0

The one point which stands out prominently as a result of the three tests given is that the smaller the mouth opening the larger the percentage of fines made. The amount of fines made has also been found to depend somewhat on the condition of the jaw plates used. On a given ore new jaw plates with sharp corrugations made approximately 14% of fines in breaking to pass a 0.5-inch ring, while old rounded and smooth plates made 30% of fines under the same conditions. It may be stated here, however, that for the smaller breakers smooth jaw plates are said to do much more satisfactory work than those with sharp corrugations, while the opposite is true of the larger machines.

§ 23. Cost of Breaking. — Estimates of the cost of breaking have been prepared for different sizes of Blake-type jaw breakers, and are given in Table 8. The basis for the estimates given is as follows:

1. *Sizes, capacities, power, and original costs* are taken from catalogue figures.

2. *Oil,* costing 35 cents per gallon is estimated to be used at the rate of one quart per 24 hours, on a 30 × 13-inch breaker, breaking 600 tons in 24 hours to a maximum size of 2 inches. The cost per ton is $35 \times \frac{1}{4} \div 600 = 0.015$ cent. The cost per ton for a 10 × 4-inch breaker, estimated to use one-half pint per 24 hours, breaking 92 tons to 2 inches is $35 \times \frac{1}{16} \div 92 = 0.024$ cent. The average of these two figures is about 0.020 cent.

3. *Interest and Depreciation* at 10% per annum. — For a 10 × 4-inch breaker this would be $27.50 per year. On a basis of 308 operating days, 92 tons being crushed per day, the cost would be $\frac{\$27.50}{308 \times 92} = 0.097$ cent. Other sizes are calculated in the same way.

4. *Power* is estimated to cost $40 per horse-power year of 308 days, or $0.1298 per day. For a 10 × 4-inch breaker, using 5 horse-power and breaking 92 tons per day, the cost per ton would be $\frac{\$0.1298 \times 5}{92} = 0.705$ cent. Other sizes are figured in like manner.

5. *Labor.* — It is assumed that the breaker is fed by a sloping chute and can therefore be fed by one man at a cost of $2 per 12-hour shift, or $4 per 24 hours. The cost per ton for a 10 × 4-inch breaker would be $\frac{\$4.00}{92} = 4.348$ cents. Other sizes can be figured in a similar manner.

6. *Wear* is estimated at 0.815 cent per ton, which is the average of the gross cost per ton at 18 mills.

7. *Repairs other than Wearing Parts.* — The maximum figure recalled by the author is $155 per year. These repairs were required by a breaker breaking 109 tons per day or 33,572 tons per year of 308 days, making the cost per ton $\frac{\$155.00}{33,572}$ or 0.462 cent.

TABLE 8. — ESTIMATED COST OF BREAKING WITH BLAKE-TYPE BREAKERS.

Size of Mouth in Inches.	10 x 4	10 x 7	15 x 9	20 x 10	30 x 18
Tons crushed per 24 hours to 2 inches	92	120	192	360	600
Horse-power	5	8	12	20	40
Cost of breaker	$275	$500	$750	$1,050	$2,250
Cost in cents per ton for oil	0.020	0.020	0.020	0.020	0.020
" " " " " " interest and depreciation	0.097	0.135	0.127	0.095	0.122
" " " " " " power	0.705	0.865	0.811	0.721	0.865
" " " " " " labor	4.348	3.333	2.083	1.111	0.667
" " " " " " wear	0.815	0.815	0.815	0.815	0.815
" " " " " " repairs	0.462	0.462	0.462	0.462	0.462
Total costs in cents per ton	6.447	5.630	4.318	3.224	2.951

The table is not intended to cover all cases of breaking — in fact such a thing is impossible — but rather to show the method of calculation for the different items under various conditions. For example, these figures are based upon one man to attend the breaker, while it is not uncommon to require two or even three men. This, of course, increases the cost per ton tremendously as the labor item is usually the largest of all even when the minimum amount is required.

The figures in the table are also based upon 24 hours per day, whereas the usual custom is to run 10 hours or less per day. This change, however, would not greatly affect the computations. It should be borne in mind that these figures cover merely the acts of feeding and breaking, without regard to the cost of elevating and screening, which must be added in figuring for a complete breaking plant.

It is noticeable that the larger the breaker, the lower is the cost per ton given in the table, principally owing to the lower cost for labor.

Actual figures concerning costs are hard to obtain, costs being so absolutely dependent upon the special conditions under which the breaking is being performed. One large manufacturer of Blake-type breakers computes the cost of breaking at 10 cents per ton and under, according to the quantity being broken, the material being understood to be hard rock or ore. One plant is recalled where the cost of breaking a hard limestone is as high as 15 cents per ton, while another plant, handling an ore composed of sulphide-bearing quartz and altered granite, was breaking as cheaply as 4 cents per ton.

A plant handling 110,447 tons of hard hematite in three months, consisted of 3 Blake-type breakers, each with a mouth opening 30 × 28 inches, driven by a 14 × 26-inch Reynolds Corliss engine of 125 horse-power. Of the 110,447 tons perhaps 60% actually required breaking. The cost was as follows:

Supplies	$5,025.00	4.54 cents per ton.
Other accounts	3,718.47	3.36 " " "
Total	$8,743.47	7.90 " " "

One engineer after handling large quantities of ore under varying conditions, deduces the following estimate as an average for a plant of 200 tons capacity in 10 hours:

	Per shift.	Per ton.
Power. Per day of ten hours, at 1 cent per ton	$ 2.00	$0.0100
Labor. Four laborers at $3.00	12.00	0.0600
Repairs. Toggles, jaw plates, etc. $0.85		
Wear of tools, babbitt, etc	0.75	
Daily slight repairs on machinery	0.80	
Miscellaneous items, sampling, etc.	0.75	
Total repairs	3.15	0.0157
Sinking fund (10 percent per year on original cost)	1.40	0.0070
Total	$18.55	$0.0927

From the above we may conclude that the cost of breaking varies between

3 and 15 cents per ton under roughly the best and worst conditions, while perhaps 8 cents a ton is a fair estimate of the cost under average conditions, that is with an ore which does not break too hard, with a fair daily capacity, and when not situated too far from populous centers.

(*b*) JAW BREAKERS HAVING AN EQUAL MOVEMENT ON ALL SIZES.

§ 24. Breakers of this type have not found their way extensively into the mills, perhaps because nothing is gained by using them in preference to the other types of jaw breakers. They do not have the capacity of the other types and the power required is as much if not more than with either the Blake or Dodge-type breakers. The principle of action is similar to the others except that the movable jaw is pivoted at the center instead of at the end. The Blake-type breakers have the advantage of capacity without making fines, the Dodge-type has the advantage of turning out a very uniform product which may contain considerable fines if the machine is "choke fed," while these breakers fit somewhere between the two and seem to have no special advantage. With these few remarks we will next take up the Dodge-type breakers.

(*c*) JAW BREAKERS HAVING THE GREATEST MOVEMENT ON THE LARGEST LUMP WITH THE SWING JAW PIVOTED BELOW.

§ 25. THE DODGE BREAKER, invented by M. B. Dodge, is shown in section in Fig. 6. It consists of a solid cast-iron frame 2, carrying boxes for the ful-

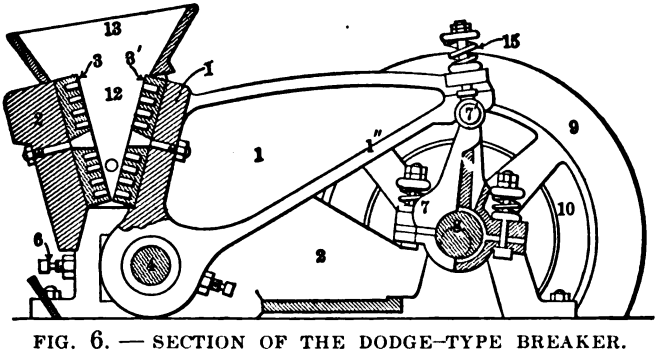

FIG. 6. — SECTION OF THE DODGE-TYPE BREAKER.

crum pin 4 and the eccentric shaft 8. Bolted to this frame is the fixed jaw plate 3. The movable jaw 1′, to which is bolted the jaw plate 3′, oscillates upon the fulcrum pin 4 and the lost motion in the pin and boxes is taken up by springs. The operation depends upon the use of the powerful lever 1, of which 1″ is the long arm and 1′ is the short arm. This lever consists of a web strengthened by heavy flanges. The upward or breaking movement is imparted to the long arm of the lever by an eccentric 8, acting through a connecting rod 7 and the bearing on the head of 7. Projecting pins 7′ which are a part of 7, are connected to the long arm by connections and springs 15, thus providing for the return movement of the long arm and also to take up lost motion. The cap of the connecting rod is provided with springs to take up the wear of the eccentric. The width of opening at the throat is adjusted to take up for wear by moving plates from front to back of the fulcrum boxes at the same time setting up the set screw 6.

The projecting pins 7′ are calculated to break and save the other parts of

the machine from rupture should a large piece of iron or other unyielding material come into the breaker. All bearings have ample provision for protection from dust. Power is applied by a belt on the pulley 10. The machine consumes power in breaking rock for a little less than half a revolution and absorbs power in the fly-wheel for the remainder. It is therefore an intermittent machine. The jaws can be easily replaced, and may be turned end for end to obtain the maximum wear.

The Dodge-type breakers are used mostly as intermediate breakers, that is, the feed to them is usually the product of a previous breaker. They are especially adapted to give a uniform product which is in some cases desirable. Water is sometimes fed with the ore, but not necessarily nor usually. There are not nearly as many Dodge-type jaw breakers in use in the mills as Blake-type. Table 9 gives some capacities, power, and sizes of Dodge-type breakers, but they are also made in many other sizes.

TABLE 9. — CAPACITIES, POWER, AND SIZES OF DODGE-TYPE BREAKERS.

(Data from Catalogues.)

Size of Jaw Opening in Inches.	Size of Pulley in Inches.	Horse-power Required.	Capacity to 1 Inch. Tons per 24 Hours.	Revolutions per Minute.	Net Weight Complete. Pounds.
6 x 4	4 x 20	2 to 4	18 to 24	250	1,200
6 x 6	5 x 12	3	24 to 48	350	1,200
8 x 7	6 x 16	5	72 to 96	300	2,200
10 x 7	6 x 24	4 to 8	72 to 144	250	3,600
10 x 8	8 x 24	6	96 to 144	250	4,600
12 x 8	8 x 24	7	96 to 144	250	4,600
Special					
15 x 9	10 x 30	9	192 to 288	250	9,000
15 x 11	10 x 36	8 to 12	192 to 360	250	10,000

Two Dodge-type breakers with 15 × 11-inch mouth openings, when breaking from 30 to 50 tons per 24 hours of dry oxide and sulphide-bearing quartz and limestone from a maximum of 2.5-inch and a minimum of 1.25-inch size to 0.75 inch, required, by actual measurement, 15 horse-power.

§ 26. *Material, Life, and Cost of Repair Parts.* — The information concerning the material, life, and cost of repair parts of the Blake-type breakers applies with equal force to the Dodge-type machines. The jaw plates are usually made of best chilled iron, but the superiority of manganese steel over chrome steel, hammered steel, cast steel, and chilled iron has been proved

§ 27. QUALITY OF WORK OF DODGE-TYPE BREAKERS. — The author cannot give a sizing test on the product of a Dodge-type breaker, but, owing to the fact that it has the discharge opening near the center of motion of the movable jaw, the variation in the discharge opening is so slight that a practically uniform product is obtained. This machine may also be fed "choked" (explained on page 64), resulting in a product containing a large proportion of fines.

§ 28. COST OF BREAKING. — The cost of breaking with a Dodge-type breaker is calculated as with the Blake-type and is so nearly the same that the student is referred to the Blake-type machines for this information.

GENERAL REMARKS UPON JAW BREAKERS.

There are three lines of thought along which discussion may be profitable:

(*a*) A comparison of the Blake-type with the Dodge-type of breakers.

(*b*) The necessity for simplicity of action.

(*c*) Use of water.

§ 29. (*a*) THE COMPARISON OF THE BLAKE AND DODGE-TYPE OF BREAKERS. — Much discussion has taken place over the question: Should the swing jaw be pivoted above or below? As a contribution to the discussion the author submits Tables 10, 11, 12, and 13.

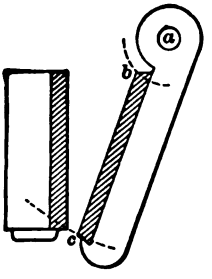

FIG. 7.

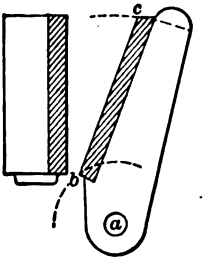

FIG. 8.

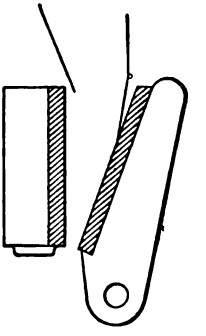

FIG. 9. — HOPPER ON DODGE BREAKER.

TABLE 10. — MOVEMENTS ON THE BLAKE BREAKER. (SEE FIG. 7.)

Mouth Size. Inches.	Distance ab = radius. Inches.	Distance ac = radius. Inches.	Movement at c. Inches.	Movement at b. Inches.
7 x 10	9	28¾	¼ = 0.25	0.078
9 x 15	10½	35	5/16 = 0.313	0.094
10 x 20	11½	36½	5/16 = 0.313	0.097
13 x 30	11¾	43	5/16 = 0.313	0.085

TABLE 11. — MOVEMENTS ON THE DODGE BREAKER (SEE FIG. 8.)

Mouth Size. Inches.	Distance ab = radius. Inches.	Distance ac = radius. Inches.	Movement at b. Inches.	Movement at c. Inches.
6 x 6	8⅛	20⅞	0.389	1
7 x 8	6½	15¾	0.397	1
8 x 12	4¾	12	0.247	⅜

TABLE 12. — MOVEMENTS ON THE BLAKE BREAKER.

Mouth Size. Inches.	Movement at Mouth. Inches.	Movement at Throat. Inches.
4 x 10	3/16 to ¼	½ to 11/16
7 x 10	5/16 to 5/16	5/16 to 13/16
9 x 15	⅜ to 7/16	⅜ to 7/16

TABLE 13. — MOVEMENTS ON DODGE BREAKER.

Mouth Size. Inches.	Movement at Mouth. Inches.	Movement at Throat. Inches.
4 x 6	¼	⅜
6 x 8	¼	⅜
8 x 12	5/16	⅜
10 x 15	5/16	⅜

A 7 × 10-inch Blake and a 7 × 8-inch Dodge have in common a gape of 7 inches and for the purpose of computation may both be treated as if they were 7 × 7-inch breakers, breaking 1 seven-inch cube of sandstone at the mouth and 7 one-inch cubes of sandstone at the throat. The breaking strength of sandstone being taken as 6,457 pounds per square inch, the 7-inch cube will require 49 × 6,457 = 316,393 pounds, and the 7 one-inch cubes will require 7 × 6,457 = 45,199 pounds, respectively to break them. The movements and speed of the two machines are as follows:

	Blake.	Dodge.
Movement at mouth	0.078 inch.	1.000 inch.
Movement at throat	0.25 inch.	0.397 inch.
Revolutions per minute	275	300

Then the total movements and the total foot pounds of work per minute for each when treating 1 seven-inch cube at the mouth and 7 one-inch cubes at the throat would be as follows:

		Total Forward Movement per Minute. Feet.	Force to break Rock. Pounds.	Foot Pounds of Work per Minute.
Blake	At the mouth	0.078 × 275 ÷ 12 = 1.79	316,393	566,343
	At the throat	0.25 × 275 ÷ 12 = 5.73	45,199	258,990
Dodge.	At the mouth	1.0 × 300 ÷ 12 = 25.00	316,393	7,909,825
	At the throat	0.397 × 300 ÷ 12 = 9.925	45,199	448,600

From which it appears that the Dodge breaker is working at 17.64 times the rate at the mouth that it is at the throat $\left(\frac{7,909,825}{448,600} = 17.64\right)$ while the Blake is working at only 2.19 times the rate at the mouth that it is at the throat, $\left(\frac{566,343}{258,990} = 2.19.\right)$

If this line of argument is correct, a machine so unevenly loaded as the Dodge cannot fail to be more expensive in use of power than one as evenly loaded as the Blake. It will doubtless be argued that this statement is not fair, because the Dodge breaks the piece long before it has gone its 1 inch. This is true, but in reply it may be stated that while it was breaking the rock, it was doing work at the above computed rate.

Again, let us assume that our 7-inch cubes actually report at the throat at the rate of 7 one-inch cubes for each breaking act, and that these cubes, and no more, are broken fine enough to drop through when the throat opens, then it will take forty-nine breaking acts at the throat to clear away what one breaking act does at the mouth. In other words, the capacity at the mouth is forty-nine times as great as that at the throat. Is it not clear then that the Blake method, which diminishes the exertion at the mouth until several revolutions are often taken to make the first break, and increases it at the throat, is more in harmony with the demands of the operation than the Dodge method which multiplies the already too great capacity of the mouth, and diminishes the already too little capacity at the throat, thereby tending to create the choking effect which is often complained of in running Dodge breakers? The author recalls one 15 × 11-inch Dodge-type breaker, running at 214 revolutions per minute, fed with rock between 3 inches and 1 inch in size, set to break to 1 inch, which had given considerable trouble from choking and was stopped by putting in a hopper of the form shown in Fig. 9.

The difference in breaking is apparent in listening to the two machines. The Dodge breaker snaps the lumps apart with a report like a pistol shot, while the

Blake works quietly. Another evidence of the momentary high power required by the Dodge is the massive lever arm which was developed from the fact that the earlier Dodge breakers gave much trouble from the breaking of the lever arm.

The commonly expressed comparison between the two machines is that the Dodge gives a more even product while the Blake has a larger capacity. This, however, could hardly be true with machines built with the movements quoted in Tables 10 and 11, but it is true with those quoted in Tables 12 and 13. This common conclusion may be due to the fact that the Dodge breakers are usually set to do a little finer work than the Blake breakers.

There seems little doubt that the Dodge gives a higher percentage of fines than the Blake with the same movement at the throat, especially when run at nearly full capacity. This may be accounted for by the fact that the Dodge is putting in more work at the mouth than is needed to prepare the lumps for the throat. This excess of work is making fines and the machine is acting under the conditions of choked crushing. (See page 64.) The choking or stopping of the Dodge is probably due to this excess of fines, combined with the large movement at the mouth. Each machine has its place, however, and the one to be used will depend upon the special conditions of each case.

§ 30. (*b*) The Necessity for Simplicity of Action. — A breaker which mixes two kinds of action in handling its charge will generally be found to be wasting either power or time by so doing. If, for example, a breaker breaks the coarser lumps in one part of the jaw by pressure and in another by grinding action, either the pressure is better than the grinding or the grinding better than the pressure. Whichever method proves best for that lump, it would be economy of power to treat all the lumps by that method.

A breaker may be built up of two parts which work upon different principles. In such machines the first or upper part prepares the ore for the second or lower part. It will generally be found that the first part has a vastly greater capacity than the second, and, in consequence, it is either clogged with ore that it cannot discharge into the second part, wasting power thereby, or it must be underfed, and so wastes time. The Blake-type roll-jaw breakers seem to overcome this objection better than any of the others, as the portion devoted to fine breaking has a very large capacity, probably as large as that of the coarse-breaking portion. The widening of the jaws at the throat is made to contribute toward this end.

§ 31. (*c*) Use of Water. — Water is sometimes fed to the rock breaker with the ore. Blake-type breakers are the only ones in which the author has ever seen water introduced with the feed. The addition of water is made under two considerations: First, it is sometimes necessary to add the water to the system to move the ore in the chutes, and if so, why not feed it in the breaker? Secondly, breaking is hastened and the production of slimes is lessened by adding water to get the fines out of the way, particularly when the ores are soft, muddy, or talcose. Water prevents packing of a breaker from clayey ores and for this reason a stream of water from a 1-inch pipe is kept running into the breakers which treat soft ore in Missouri. It is even said that pouring a cup of water into a breaker clogged with clayey ore will often start it. Water may also be used to lay dust in case of need.

II. — The Spindle or Gyrating Breakers.

Of these machines there are three types:

(*a*) Those which have the greatest movement on the smallest lump.

(*b*) Those which have equal movement on small and large lumps.

(*c*) Those which have the greatest movement on the largest lump.

(*a*) THE SPINDLE BREAKERS HAVING THE GREATEST MOVEMENT ON THE SMALLEST LUMP.

Examples of this type are: The Gates and the McCully breakers.

Since all the most modern gyratory breakers are alike in principle and differ only in minor details we will illustrate and describe one which is finding its way quite generally into American plants. The student, with a thorough understanding of the principles involved, should be able to understand any machine of this type.

§ 32. THE GYRATORY ROCK OR ORE BREAKER, as shown in Fig. 10, consists

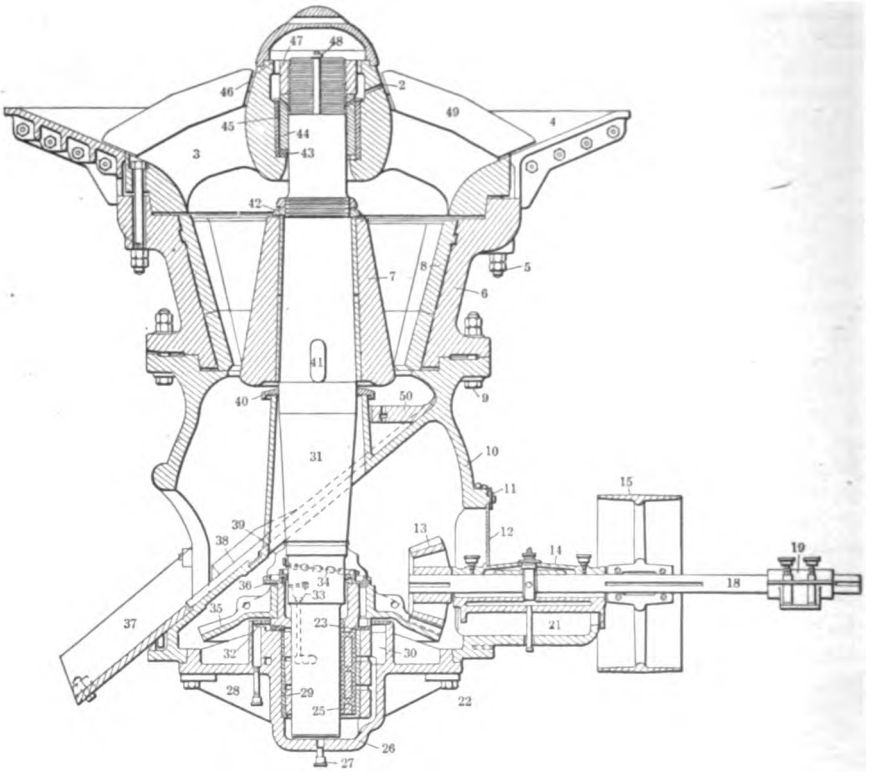

FIG. 10. — SECTIONAL VIEW OF GYRATORY BREAKERS.

of a hopper (4) held by bolts (5) to the top shell (6) which is in turn supported by and secured to the bottom shell (10) by bolts (9). The bottom plate (26) is held to the bottom shell (10) by bolts (22) and can be dropped to expose the bevel gear (35) and eccentric (25) for repairs. The hub of this plate is fitted with a removable steel bushing (29) and is surrounded by a large annular oil chamber (30) connected to the bottom part of the hub by large channels. Plug (22) serves to draw off the old oil which has become gritty. This construction insures a perfect lubrication for the eccentric (25) and brass wearing ring (23) as they are always entirely submerged in oil. Grease cup (33) also assists in the lubrication of the eccentric (25). The bottom shell (10) is fitted with a large inspection door (12) and fastening (11) underneath the inclined diaphragm, through which the gears (13) and (35) and eccentric (25) may be observed in operation and lubricated.

The spider (3), protected by removable wearing plates (49), is fitted with a removable steel bushing (45) and a tool-steel wearing ring (43). The spindle (31) is very heavily proportioned and has fitted to it the breaking head (7), made of chilled iron or manganese steel with either a smooth or ribbed breaking face, which is pressed on and is kept from rotating by a simple steel key (41), and is prevented from working up by two lock nuts (42). The spindle (31) is suspended from the spider (3) by a split nut (47) which is screwed onto the spindle at the threaded portion near the top and locked there by the gib key (48). A steel sleeve (44) is interposed between this nut (47) and the wearing ring (43) above mentioned, the latter running in a tight annular oil bath supplied through the oil holes (2). The raising or lowering of the breaking head (7) and spindle (31) is accomplished by removing the dust cap (46), loosening the gib key (48) and split nut (47), and screwing the latter down or up on the spindle. Often there are two or more key seats cut in the threaded portion of the spindle so that the gib key may make the adjustment as fine as is desirable. The point of suspension at the wearing ring (43) coincides with the fulcrum of the gyratory movement of the spindle, thus avoiding all sliding motion at the point of great bearing pressure. This construction not only effects a great saving in the power required to operate the machine, but also provides a rolling, in place of a sliding, bearing used in other suspension devices for the spindles. Elevating the spindle for the adjustment of the size of product desired does not alter its inclination, consequently the bearing of the journals is always nearly perfect.

The liners, dies or concaves (8) are preferably made of manganese or hardened steel and secured to the top shell (6) by means of bolts or keys, a mortise and tenon being provided to prevent the liners from slipping down. They are usually made smooth. The spider (3) should be arched widely over the top of the breaking head (7) and concaves or liners (8), leaving large spaces on either side and underneath, which tend to prevent the bridging of rock or ore dumped into the breaker. This arching should be sufficient to permit the largest piece that can get into the mouth or opening between the spider arms to pass easily underneath the arms and thence through the breaker.

The inclined diaphragm of the bottom shell (10) is protected by removable hard-iron or manganese-steel wearing plates (50). Side flanges (38) and (39) are cast to these plates to protect the shell at the spout opening. The spout (37) is made of heavy plate steel in the small machines and of chilled iron or manganese steel in the larger sizes. The bottom shell (10) is so cast as to form a cone of protection about the spindle and a small mantle or annular ring (40), which is close fitting on the spindle, rests loosely over the top of the protective cone, thus preventing ore from falling into the gears and eccentric below.

The counter-shaft bearing bracket (14) is cast to the bottom shell (10), and is machined to template to receive the removable bearing (21) which is also machined to gauge. This construction not only makes the bevel pinion (13) more accessible, but also permits of repairs being made to the bearing in the most convenient place. The bearing is fitted with a cap and is babbitted with a special mandrel. The oiling device in this bearing as well as in (19), is simple and insures cool running of the counter-shaft (18). The gears (13) and (35) are made of steel and the latter is secured to the eccentric (25) by a simple key to facilitate removal. Power is applied to the pulley (15) and thence through the counter-shaft (18), and gears (13) and (35) to the eccentric (25), which moves the spindle (31), and with it the breaking head (7), in such a manner that the amount of space between the liners or concaves (8) and the breaking head (7) varies as the breaking head (7) rotates. All bearing parts and gears are suitably protected from grit and ore by bonnets or otherwise and the method of oiling is of the most approved type.

Some manufacturers of gyratory breakers support the spindle on a wearing button resting on a take-up screw in the bottom plate. Supporting the spindle is not, however, considered as good as suspending it as already described.

§ 33. METHOD OF INSERTING LINERS OR CONCAVES. — Fig. 11 shows one method of placing and holding new dies or liners. In this case there are 12 sections. The space (1) behind and between them is run with zinc. One of them (15) is called the key liner and is rectangular in section; behind it in the top shell is the groove (2) in which a wedge can be driven for removing this key liner. After this one is removed the remainder may be pried off one at a time. The ring (4) and the wedges (5) are only used when putting in new dies. This is only one of many methods of holding on the liners.

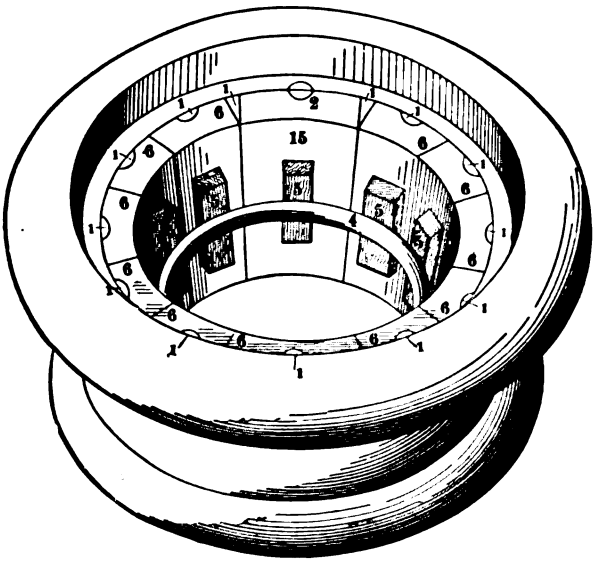

FIG. 11. — LINERS, DIES OR CONCAVES FOR GYRATORY BREAKERS.

§ 34. PRINCIPLES OF GYRATORY BREAKERS. — The action of the machines is as follows: When the bevel wheel (35) (see Fig. 10) revolves, the spindle (31) is free to gyrate or rotate in the eccentric (25). Practically it rotates until ore is fed between the breaking faces (7) and (8); it then gyrates. This gyrating motion causes the breaking head (7) to approach and recede from the concaves (8); and, owing to the fact that the spindle (31) acts as a lever with its fulcrum at the wearing ring (45), it will cause a greater movement at the lower end of (7) than at the upper end where the leverage or purchase is greatest. This causes, upon the lumps of rock which are fed into the space between (7) and (8), a breaking action by pressure which has a greater movement upon the smaller lumps than upon the larger.

The large lumps as broken fall a little to a fresh bearing to be broken again by the next act of compression, and this is repeated until all is broken fine enough to pass the throat of the machine, that is, between the concaves and the breaking head at the narrowest point. The ore then passes out over the chute (37). The fact that the maximum movement is at the point of discharge assures a free discharge and the amount of this movement is so small that the product is approximately sized. Since these machines do work all the time, the feed and discharge being continuous, they may be termed continuous breakers and in this respect they differ from the two types of jaw breakers which have been described and which are really working only a little less than one-half of each revolution. On this account there is practically no jerking imparted to the building when using gyratory breakers such as there is with jaw breakers.

Since a certain point near the top of the spindle, which is at the fulcrum, has no motion of translation, while a point in the lower end of the spindle gyrates in a circle, it follows that the axis of the spindle describes in its gyrations one

long and very acute cone. Half the apex angle of this cone is called the angle of gyration and is about 1: 100 or 0° 34′.

Water is seldom if ever fed with the ore or rock to gyratory breakers.

§ 35. SHORT BREAKING HEADS AND CONCAVES FOR FINE BREAKING. — Some gyratory breakers may be fitted with a special type of short breaking heads and concaves, so that it is possible to produce with the machine a finer product than if the standard length head and concaves are used. (See Fig. 12.)

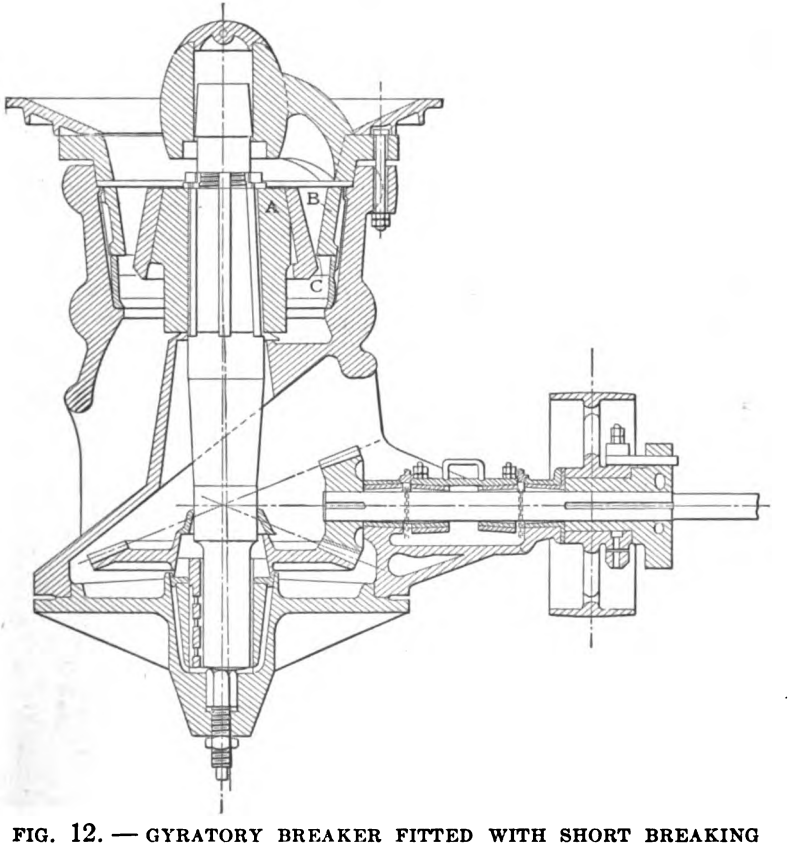

FIG. 12. — GYRATORY BREAKER FITTED WITH SHORT BREAKING HEAD AND CONCAVES.

With this arrangement the head *A* is made shorter and of larger diameter than in the case of the standard length head. The concaves *B* are also shortened so that the bottom of them will come slightly above the bottom of the head. The discharge point *C*, between the head and concaves, is therefore placed about the middle of the top shell of the machine, and is consequently raised much nearer to the fulcrum point of the spindle.

The fineness to which a breaker may break depends upon the eccentricity of the shaft at the discharge point between the head and concaves. With the short head and concaves, inasmuch as this discharge point is raised in the machine, the eccentricity is less at this point than in the standard machine, and consequently finer breaking is possible.

In order to maintain the proper breaking angle between the head and concaves, since the short head is larger in diameter at the bottom than the stand-

ard, it is also necessary to increase the diameter at the top. This makes the distance between the head and concaves at the top of the machine smaller than with the standard head and concaves, and does not admit of so large material being fed to the breaker. Hence this breaker is generally used to take care of oversize products.

§ 36. SELF-TIGHTENING MANTLE FOR GYRATORY BREAKERS. — It is a well-known fact that manganese steel flows when under extreme pressure. As a result of this, when a manganese-steel head is running on hard rock, no matter how tight the head nuts are screwed down, the head becomes loose. To overcome this difficulty the mantle type of head shown in Fig. 13 has been devised.

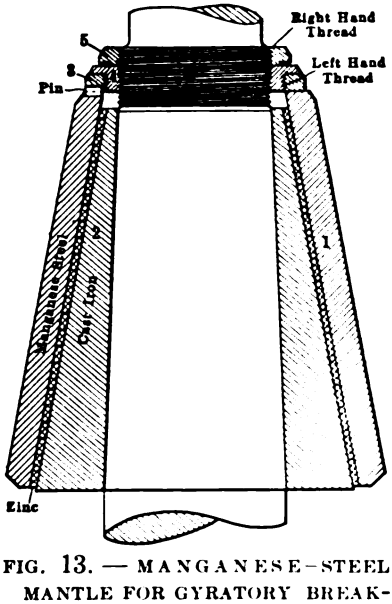

FIG. 13. — MANGANESE-STEEL MANTLE FOR GYRATORY BREAKERS.

The outside, or mantle (1), is made of manganese steel. This mantle fits over a core, or center (2), made of cast iron and secured to the spindle in the same manner as an ordinary head. The space between the mantle (1) and core (2) is filled with zinc.

The automatic tightening of the mantle is accomplished by the special head nuts which are furnished with breakers fitted with mantles. The nuts are made of three separate pieces and the outside part of the lower nut (3) is pinned to the top of the mantle. There are two kinds of threads on these nuts, the outside lower nut having a left-hand thread and the two inside nuts (4) and (5) having right-hand threads. If there is a tendency for the mantle to get loose, it immediately works around on the head center, but inasmuch as it is pinned to the outside lower nut this twisting motion is imparted to the nuts through the pin. If the motion is clockwise, the right-hand thread comes into action and forces the mantle down against the head center. Since this center has a taper fit on the spindle as well as on the outside where the mantle bears, both the mantle and head center are forced down, and any looseness is immediately taken up. If the motion when rotating is counter-clockwise, the left-hand thread operates, the result being the same as with the right-hand thread described above.

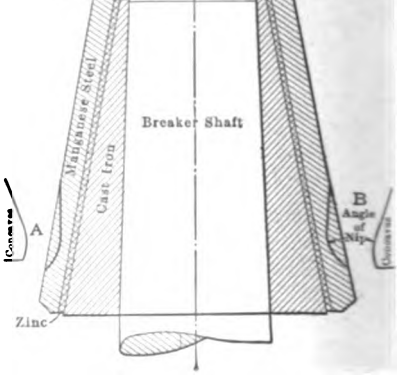

FIG. 14. — SKETCH SHOWING FALLACY OF LARGE RANGE OF ADJUSTMENT FOR GYRATORY BREAKERS.

§ 37. RANGE OF ADJUSTMENT OF GYRATORY BREAKERS. — The Power and Mining Machinery Company states that a gyratory breaker cannot be adjusted to vary the size of product more than $\frac{1}{4}$ inch. If more variation is desired a different head must be put in the machine or the thickness of the concaves must be changed. Fig. 14 shows at *A* the kind of wear that takes place on the head when the breaker is run

for any length of time without adjusting. As soon as this wear has increased the opening so that the product is too large, and it is attempted to raise the head to reduce the size of the product as at *B*, the machine will become choked because the angle of nip is too great and the particles cannot discharge from the breaker.

For this reason the modern gyratory breaker is made with less adjustment, the means of adjustment which is provided being designed to take care of slight wear on the bottom edges of the concaves. If good results are to be obtained from the breaker the head must be lifted a little every week so as to prevent the forming of a flange with an angle of nip so great that choking will result when the spindle is next adjusted.

There is no demand for a machine that can reduce the rock only to sizes between 1 and 4 inches. Most of the breakers are expected to break the rock as fine as possible in one operation. Experience has shown that the limit of the ratio of reduction is 6 to 1; in other words, a breaker having a feed opening 18 inches wide can produce a 3-inch product. With some rock it is possible to increase this ratio to about 7 to 1, but if finer breaking is attempted the strain on the machines is so enormous that they would have to be built much heavier than is now the practice. The reason for this can readily be seen by following the rock as it enters the mouth of the breaker and is finally discharged. The big pieces break into a number of fragments the moment they are gripped by the head. These fines drop down, and the space at the discharge point soon fills up. Therefore the number of points of contact of the rock is increased very rapidly; and the machine is soon filled up with material which is all fine enough to be discharged, but can not fall down because of the small discharge opening, hence the strains on the machine. In some respects this action is the same as when crushing with rolls. With these machines the ratio of reduction should never exceed 4 to 1, as the speed of reduction is much greater in the roll than in the gyratory breaker.

In the iron mines of Michigan a large number of gyratory breakers are used, and it has been found that the most economical setting of the breaker is when the discharge point on the head is exactly opposite the discharge point on the concaves. When such is the case, there is no obstruction to the free discharge of the ore. The broken product can vary within considerable limits, and therefore the head is run until the product becomes too large, when a new head of a larger size is put in without disturbing the concaves. After this head is worn so that the rock is too large new concaves are set in with the second head.

At some mills a new head is first mounted and with it the thinnest set of concaves, and the screw adjustment in the top of the spindle is used to regulate the size until the head is raised as high as possible, then the process is repeated until the head is raised as high as possible, then the process is repeated with a medium set of concaves, and finally with a thick set. At the end of the third period the head is worn out and the routine is gone over again.

In some of the modern gyratory breakers it is possible to raise the spindle as high above the breaking point, at which the material discharges from between the breaking head and concaves, as it extends below this point when at its lowest position, thus making it possible to secure greater wear from the head and concaves.

A gyratory breaker may be arranged for finer breaking with a smaller throw than the ordinary jaw breaker. This is due to the fact that the corrugations on the breaking head are creeping backward all the time in a full-fed breaker, and any tendency to pack is broken up by the constantly changing difference in the parts of the head and of the concaves which are opposite one another.

§ 38. Details of Capacity, Power, and Sizes of Gyratory Breakers. — Gyratory breakers are made in a great number of sizes, those given in Table 14

being only a few selected from a catalogue to give the student a general idea of the details of the machines.

From a large amount of data the diagram shown in Fig. 15 has been con-

TABLE 14. — CAPACITY, POWER, SIZES, AND WEIGHTS OF GYRATORY BREAKERS.

Size.	Weight of Breaker in Pounds.	Size of Openings in Breaker. Inches.	Size of Combined Openings. Inches.	Capacity per Hour in Tons of 2,000 Pounds Passing 2½-Inch Ring.	Size of Driving Pulleys. Inches.	Revolutions per Minute of Driving Pulley.	Horse-power of Engine Required.	Smallest Size Product which can be made at One Break. Inches.	Size.
1 ..	7,100	5 x 20	5 x 40	5– 9	18 x 6	600	4– 6	¾	1
2 ..	10,200	6 x 25	6 x 50	7– 12	20 x 8	575	6– 10	1	2
3 ..	17,000	7 x 28	7 x 56	10– 20	22 x 10	525	10– 15	1¼	3
4 ..	23,000	8 x 34	8 x 68	20– 40	28 x 12	475	12– 20	1½	4
5 ..	36,500	10 x 40	10 x 80	35– 55	30 x 14	450	20– 25	1¾	5
6 ..	48,000	12 x 44	11 x 88	50– 75	34 x 16	425	25– 40	2	6
7½ ..	71,500	15 x 55	14 x 110	* 75–125	40 x 18	400	45– 70	2½	7½
8 ..	108,000	18 x 68	18 x 136	*125–175	44 x 20	375	65–100	3	8
9 ..	160,000	21 x 76	21 x 152	*200–500	52 x 20	350	100–140	4	9
10 ..	190,000	24 x 66	24 x 198	*300–700	52 x 24	350	125–175	5	10

* Based on product approximating 3-inch, 3½-inch, 4-inch, and 5-inch cubes, respectively.

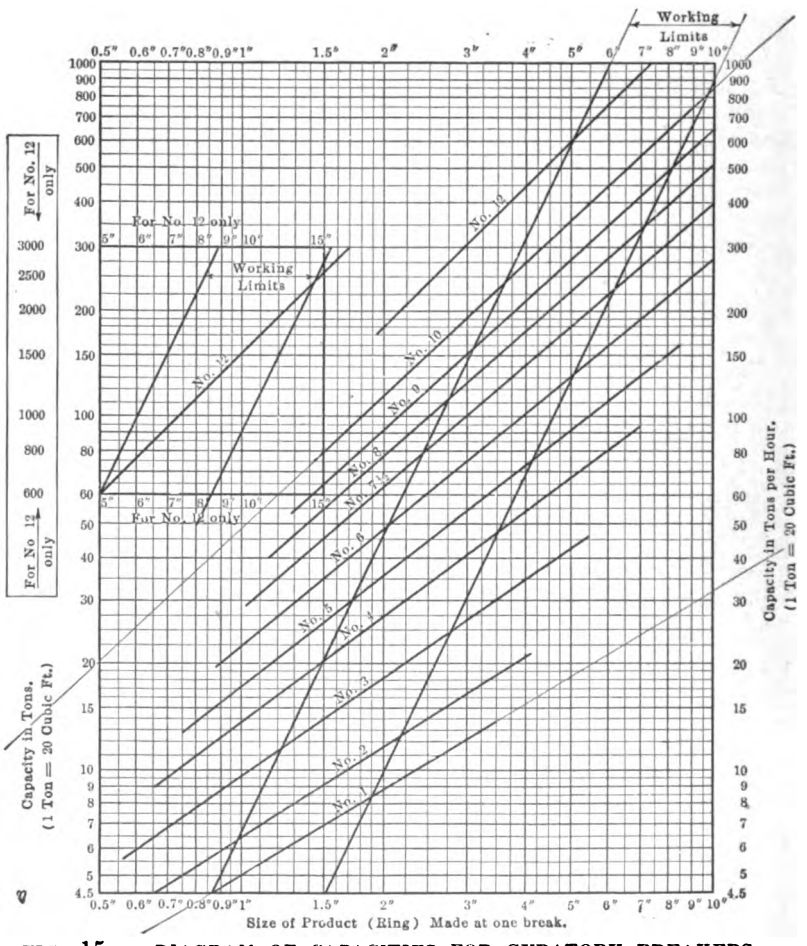

FIG. 15. — DIAGRAM OF CAPACITIES FOR GYRATORY BREAKERS.

structed for getting the approximate capacity of gyratory breakers when handling rock of average hardness. The horizontal dimensions give the size of ring through which the material is broken at one break, and the vertical dimensions give the tons per hour. If, then, we wish to find the capacity of a No. 5 machine breaking through a 2.5-inch ring, we find the vertical line passing through the abscissa 2.5, and follow down until we come to the oblique line No. 5, thence horizontally, and read in the margin 45 tons per hour, assuming 20 cubic feet = 1 ton. A No. 5 gyratory breaker handling a sulphide-bearing quartz of average hardness in a certain mill which the author has in mind breaks about 31 tons per hour through a 2.5-inch ring and requires 13 horse-power.

Taken generally the information in Table 14, together with the diagram in Fig. 15, is fairly conservative and may be relied upon in figuring on breakers to handle ores of average hardness. As a rule gyratory breakers have rather large capacities and this is especially so when they are used, as they often are, to further reduce the product of a preliminary jaw breaker.

With short breaking heads and concaves on the breaker the capacity of the machine and the power required are both less than in the standard machine. The resulting product is finer, but the size of the ore fed to the machine is limited and the utility of the breaker reduced.

(*b*) SPINDLE BREAKERS WITH EQUAL MOVEMENT ON LARGE AND SMALL LUMPS.

§ 39. Gyratory breakers of this type place the breaker head directly upon a long eccentric running its whole length. The spindle revolves and the breaker head gyrates upon the spindle. This is the parent idea from which modern gyratory breakers have been developed, but it is not found in use in the mills.

(*c*) SPINDLE BREAKERS WHICH HAVE THE GREATEST MOVEMENT UPON THE LARGEST LUMP.

§ 40. In this type of gyratory breakers the spindle rests in a ball and socket bearing or is supported on a wearing button in the base of the machine while the eccentric and driving mechanism are near the top of the spindle, thereby giving the top the greatest and the bottom the least movement.

§ 41. COMPARISON OF GYRATORY BREAKERS OF CLASS (*a*) WITH THOSE OF CLASS (*c*). — The remarks made in comparing Blake and Dodge-type jaw breakers (§ 29) apply here with equal force. The breakers of Class (*c*) have the one especial advantage over Class (*a*) in that the breaking head and concaves are located nearer the base, and, as the work takes place so near the base, there is more stability and less jar than in those of Class (*a*). These breakers have not found their way into the mills to any extent.

§ 42. QUALITY OF WORK AND SIZE OF PRODUCT. — Breaking tests have been made with gyratory breakers upon a hard, close-grained granite with a compressive strength of about 30,000 pounds per square inch and the feed ranging between 3 and 1.5 inches in diameter under the conditions shown below:

Test No.	Opening at Throat. Inches.	Rock Used. Pounds.	Time Consumed. Minutes.	Net Power Used. Amperes.
3 and 4	0.17	500	9.92	10.64
5 and 6	0.17	500	10.33	9.87
7, 8, and 9	0.17	500	13.51	8.77

Below will be found sizing tests of the products produced as above:

	Tests No. 3 and 4.		Tests No. 5 and 6.		Tests No. 7, 8, and 9.	
	Pounds.	Percent.	Pounds.	Percent.	Pounds.	Percent.
Over 1 inch	1.5	0.30	1.5	0.30	0.58	0.12
Through 1 on ¾-inch	50.5	10.15	59.5	11.94	23.50	4.69
" ¾ " ½ "	224.0	45.03	218.5	43.83	198.80	39.70
" ½ " ¼ "	99.5	20.00	99.0	19.86	126.70	25.30
" ¼ " ⅛ "	122.0	24.53	120.0	24.07	151.20	30.18
Total	497.5	100 01	498.5	100.00	500.78	99.99

Following will be found two more sizing tests on the products of gyratory breakers handling a very similar ore to the one just given only the breakers were fed with material as large as they would take.

Size of mouth opening.	4 x 33 Inches.	7 x 48 Inches.
	%	%
On 2½ inch	3.0	5.0
Through 2½ " 2 "	5.3	17.5
" 2 " 1½ "	24.2	27.0
" 1½ " 1 "	35.0	20.8
" 1 " ¾ "	9.9	6.7
" ¾ " ½ "	8.4	7.3
" ½ " ¼ "	6.3	9.0
" ¼ " ⅛ "	3.2	2.7
" ⅛	4.7	4.0
Totals	100.0	100.0

Fig. 16 shows a diagram, made up from a large number of careful tests, for determining the size of products made by gyratory breakers. The assumption is made that 15% of the broken product will be coarser than the setting of the machine. The vertical dimensions give the sizes of screen or ring, and the horizontal dimensions the percentages. If, for instance, the machine is set for a 3-inch product and we wish to find out how much 2-inch material is in the broken product, we follow the horizontal line opposite 3-inch until it intersects the vertical representing 85%. The nearest diagonal from this intersection is then followed downward. The intersections of this diagonal with the horizontals representing the size of product, if followed down vertically, give the percentages. In the example we find that out of the product 52% will be 2-inch and smaller, 23% will be 1-inch and smaller, etc. For the smaller sizes the diagram has been transferred to the upper left-hand corner and continued. For fine sizes the diagram is not absolutely reliable, for lack of data to check it; but for the sizes from 6 inches to ½ inch it has been found to agree well enough for all practical purposes with the results actually obtained in practice.

§ 43. Material, Life, and Cost of Wearing Parts for Gyratory Breakers. — The life of the wearing parts and the relative values of the various materials depend upon the same considerations as already given in § 20. It is stated that for breaking limestone and all soft rock, ordinary chilled heads and concaves made of the best quality of gray iron will last almost indefinitely, while upon highly refractory ores or quartz the same parts will wear out in a very short time. The same is true when it comes to breaking granite, trap rock, hard heads, etc. Furthermore it has been found from experience that manganese steel has the longest life on the most difficult breaking propositions. Manganese steel, however, will not withstand the wear in breaking the granite found in the vicinity of Devils Lake, Wisconsin, in and about Pipestone, Minnesota, and Sioux Falls, South Dakota. In these cases chilled-iron parts with

smooth surfaces have been found most serviceable, but the expense for renewals is very heavy.

Best white iron has been used for breaking heads and liners, but it has not found the favor nor does it wear as well as chilled iron. From data in the author's hands he finds that the probable average life of chilled-iron heads and liners is while breaking about 42,500 tons, while 12,000 and 90,000 tons are

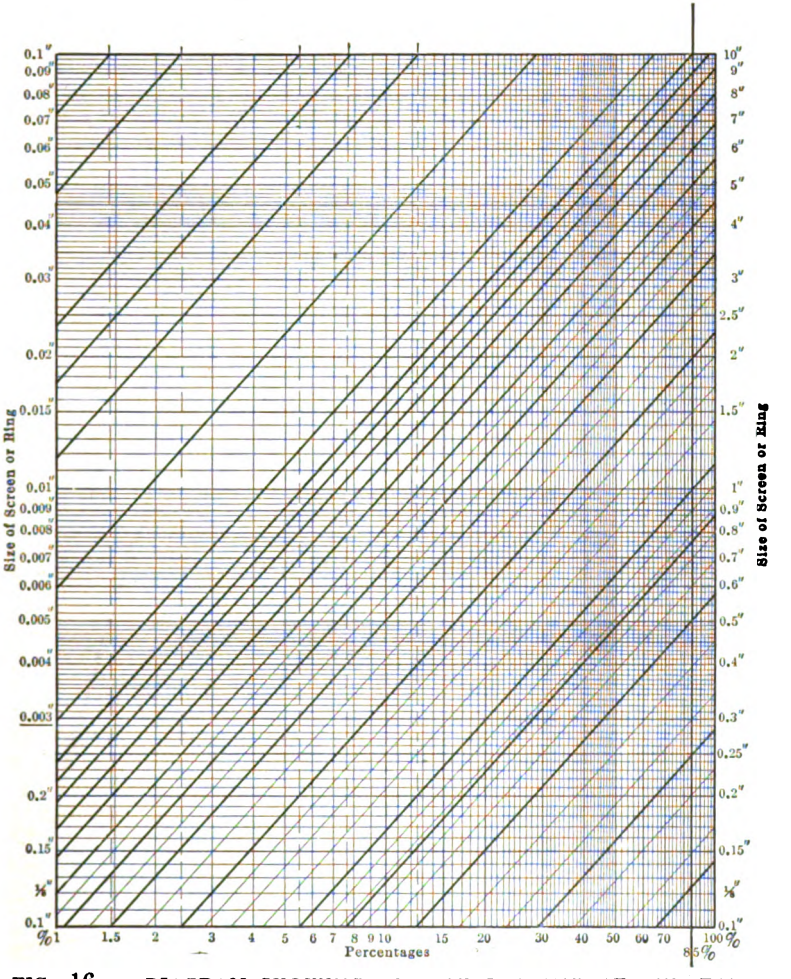

FIG. 16. — DIAGRAM SHOWING SIZE OF PRODUCT OF GYRATORY BREAKERS.

the minimum and maximum life respectively which he has on record. The average net wear per ton is 0.0172 pounds of iron, while 0.0077 and 0.0375 are the extremes in this respect. The average cost per ton, after deducting the selling price of the old metal and the cost of making the changes or repairs, is found to be 0.400 cent, while 0.217 and 0.597 cent are the minimum and maximum respectively.

§ 44. *Gunlock Manganese-Steel Mantle and Cast-iron Head Center.* — Practically all of the wear on the breaking head of a breaker takes place at the

extreme bottom of the head. A head may not be worn to any extent at the top, and although only a comparatively small portion of the bottom is worn away when using a solid manganese-steel head, nevertheless it is necessary to replace the entire head.

The mantle and cast-iron head centers shown in Figs. 17*a* and *b* and 18*a* and *b* have been designed to avoid this waste of material. With this arrangement the cast-iron head center (1) is attached to the spindle of the machine in the same manner as the regular chilled-iron head. The outside of the center is machine finished.

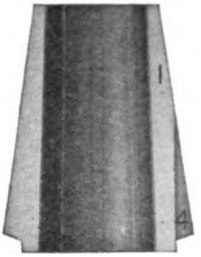

FIG. 17*a*. — SECTION OF CAST-IRON HEAD CENTER.

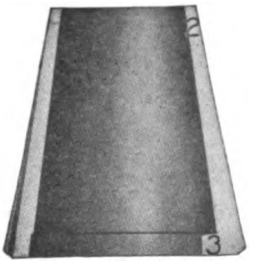

FIG. 17*b*. — SECTION OF MANTLE.

FIG. 18*a*. — MANGANESE-STEEL MANTLE SHOWING METHOD OF ATTACHMENT.

FIG. 18*b*. — BOTTOM VIEW.

The manganese steel mantle (2) is ground on the inside to fit perfectly over the head center so that it can turn upon it. At the bottom of the mantle, extending inwardly, there are two lugs (3). The center is slotted on two sides to allow the lugs to pass over it when the mantle is put on. The bottom of the head center where the lugs of the mantle come in contact with it has a double spiral surface, which forms a gunlock, so that any turning of the mantle tends to tighten it on the head center.

With this arrangement, when the breaker head is worn, it is not necessary to replace the entire head; all that is required is to remove the manganese-steel mantle from the head center and place a new mantle over the old head center, which materially lessens the cost of replacement of the head, the mantle being very much lighter than a solid head and the cost of manganese steel being very high. Moreover, the labor required to put on a new mantle over the head centers is much less than if a worn head had to be taken off the spindle and a new one keyed on.

Any looseness of the mantle which develops, due to expansion and strain of the metal, is immediately and automatically taken up by the creeping of

the mantle on the head center. The head center, once attached to the spindle, becomes a fixture and does not need to be removed every time a new mantle is put in place.

§ 45. Table 15 gives details as to life and cost of wearing parts of a gyratory breaker handling a sulphide-bearing quartz of medium hardness.

TABLE 15. — WEARING TABLE, GYRATORY BREAKER.

Wearing Part.	Material.	Weight in Pounds.		Life. Days.	Wear per Ton. Pounds.	Cost per Pound. Cents.	Sells for Cents per Pound. Old.	Net Cost per Ton. Cents.
		New.	Old.					
Head	Manganese Steel.	2,165	2,000	170	0.002365	6.95	0.68	0.1965
Head	Chilled Iron.	2,165	1,545	160	0.02115	4.30	0.68	0.2815
Set of Concaves	Manganese Steel.	2,079	1,400	345	0.00638	6.2	0.68	0.1125
Babbitt for Eccentrics	Good Quality Babbitt.	116	0	107	0.00274	45.0	0	0.120
Eccentric Wearing Rings	Phosphor-bronze.	21	10	160	0.000375	33.0	16.5	0.0181
Safety Pin	Cast Iron.	70	0	170	0.001005	11.0	0 68	0.010375

Spindles are usually made of forged steel, but preferably of wrought iron. They are turned on a taper to fit the head, which is driven to a solid conical fit. Heads made of chilled iron usually have soft iron slats cast inside them for ease of boring.

The breaking pin in gyratory breakers is usually a special pin, made of cast iron, connecting the driving pulley with the driving shaft of the machine.

§ 46. COST OF BREAKING WITH GYRATORY BREAKERS. — Estimates of the cost of breaking have been prepared for some of the various sizes of gyratory breakers. The basis for these estimates is as follows:

1. *Sizes and costs* are taken from catalogue figures.

2. *Power and capacities* are taken as the average of those given in the catalogues and calculated as with the jaw breakers.

3. *Oil* is estimated at 0.020 cent per ton, as with the jaw breakers.

4. *Interest, power, and labor* are calculated as with the jaw breakers.

5. *Wear* is estimated at 0.971 cent per ton, which is the average of the gross cost per ton at five mills using gyratory breakers.

6. *Repairs other than wearing parts.* — The maximum figure on this item in the author's possession is $175 per year on a gyratory breaker which handled during the year 28,363 tons of ore. The cost per ton is $\frac{\$175.00}{28{,}363 \times 2} = 0.308$ cent.

Then the estimated cost of breaking with gyratory breakers is as shown in Table 16.

TABLE 16. — ESTIMATED COST OF BREAKING WITH GYRATORY BREAKERS.

Number of Breaker	0	2	4	6
Size of mouth in inches	4 x 30	6 x 50	8 x 68	12 x 88
Tons broken in 24 hours	72	228	720	1,500
Horse-power required	3	8	16	32.5
Cost of breaker	$375	$760	$1,800	$3,300
Cost in cents per ton for oil	0.020	0.020	0.020	0.020
" " " " " " interest and depreciation	0.169	0.108	0.081	0.071
" " " " " " power	0.541	0.456	0.288	0.281
" " " " " " labor	5.556	1.754	0.556	0.267
" " " " " " wear	0.971	0.971	0.971	0.971
" " " " " " repairs	0.308	0.308	0.308	0.308
Total cost in cents per ton	7.565	3.617	2.224	1.918

The remarks made concerning the cost of breaking with jaw breakers in § 23, apply with equal force here but will not be repeated.

The cost of breaking with gyratory breakers in large mills is probably less than when using jaw breakers, partly because one large gyratory breaker will handle as much rock as several large jaw breakers and the cost of labor, power, and repairs becomes less, although the wear is greater with the spindle breakers.

A rough figure for getting a ton of road material through a 2.5-inch ring and sizing the product on 2, 1.5, and 1-inch screens, including cost of hauling up, dumping, and elevating, is given as from 10 to 40 cents.

COMPARISON OF JAW AND GYRATORY BREAKERS will be made along the following lines:

§ 47. (*a*) *Number Used.* — The Blake-type breaker of the pitman pattern with solid cast-iron frame, is the old standard breaker of the country and is still used more than any other type. The gyratory breakers are the result of more recent thought and, owing to prejudice against any new and untried machinery, are not so generally used as the jaw-type breakers. They are, however, growing in favor on account of their great capacity and seem to give thorough satisfaction wherever employed

§ 48. (*b*) *Principle of Action.* — The spindle breaker acts upon large elongated lumps on the principle of a beam supported at the ends and loaded in the middle (see Fig. 19), saving power thereby. This is true of the large lumps, but in regard to the small lumps that are down near the throat, the curvature of the space is too little with reference to the length of the lump for this principle to effect any appreciable result. The jaw breaker has large corrugations on its jaws which are arranged alternately, and in consequence the elongated lumps near the throat are treated on the beam principle, tending toward the formation of cubes. The spindle breaker has this action of the corrugations on the small lumps only to a slight extent since its corrugations are very small or else there are none at all.

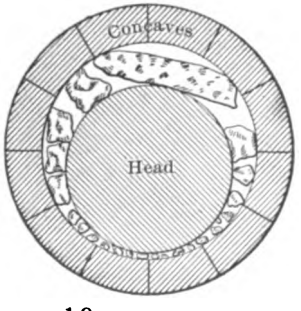

FIG. 19. — ACTION OF GYRATORY BREAKER.

§ 49. (*c*) *Taper.* — The taper or decrease of width between the shoe and die per foot of depth must be small enough to hold the rock well and prevent it from snapping out. At the same time the less the taper the deeper must be the jaw in order to effect a given reduction, and the deeper the jaw the greater the movement at the end which has the greatest movement and the greater the liability to pack. The action of the jaw breakers is such that they must have less taper than spindle breakers. The ordinary taper for gyratory breakers is 4½ inches per foot, but it is found that 5 inches on a gyratory is as good as 4½ on a jaw breaker.

§ 50. (*d*) *Power, Cost, Capacity, and Weight.* — The only complete set of figures that is available along this line is the commercial statements given in the tables under the jaw and gyratory breakers. The student can easily compile such a table, but it is obvious that too much weight should not be placed upon such a comparison.

A good rule to remember is that a breaker of either type uses on the average about 1 horse-power for every ton of rock broken per hour to 2.5 inches in size.

Results of comparative tests which have been made on gyratory and jaw-type breakers are given in Table 17.

The rock used was a hard, close-grained granite, with a compressive strength

of about 30,000 pounds per square inch. It was in lumps as large as the machines would take.

TABLE 17. — COMPARATIVE TESTS OF GYRATORY AND JAW BREAKERS.

Abbreviations.— H. P. = horse-power; In. = inches; Min. = minutes.

Kind of Machine.	Mouth Size. In.	Width of Throat. In.	Movement at Throat. In.	Revolutions of Driving Pulley per Min.*	Kind of Shoe.	Kind of Die.	Material Used. Pounds.	Time Required. Min.	Capacity per Hour. Pounds.	Net Power Used. H. P.	Relative Work Used in Breaking.
Gyratory	4 x 33	1 1/8 to 1	5/16	500	Corrugated	Smooth	1,000	3 1/4	18,000	5.2	100
Jaw	4 x 10	1 3/16 to 1/2	1/8	250	"	Corrugated	1,000	5 1/4	11,200	6.1	187
Gyratory	7 x 48	1 1/2 to 1	1/2	450	"	Smooth	2,000	2 3/4	45,000	21.7	100
Jaw	7 x 10	1 1/4 to 3/4	1/2	250	"	Corrugated	2,000	6 3/4	18,100	12.45	144

* To get the revolutions of the spindle in the gyratory machine divide by 2½.

The "Net Power" was obtained by subtracting the power used in running empty from the total power used in breaking. The "Relative Work Used in Breaking" expresses the ratio of the product of the time by the net power used. Sizing tests of the products are given in Table 18.

TABLE 18. — SIZING TESTS OF PRODUCTS OF GYRATORY AND JAW BREAKERS.

	Gyratory. (4 x 33.)	Jaw. Blake-type. (4 x 10.)	Gyratory. (7 x 48.)	Jaw. Blake-type. (7 x 10.)
On 2½-inches	3.0%	7.0%	5.0%	6.5%
Through 2½ on 2 "	5.3	10.0	17.5	23.0
" 2 " 1½ "	24.2	23.0	27.0	21.1
" 1½ " 1 "	35.0	23.2	20.8	17.8
" 1 " ¾ "	9.9	6.4	6.7	4.8
" ¾ " ½ "	8.4	9.9	7.3	7.9
" ½ " ¼ "	6.3	8.7	9.0	8.2
" ¼ " ⅛ "	3.2	4.5	2.7	4.1
" ⅛ inch	4.7	7.3	4.0	6.6
	100.0%	100.0%	100.0%	100.0%

The sizing tests show that the extra work put into the jaw breaker has made itself evident in the increased amount of fine material. The author has given these tests as the best reliable data of what the machines will do, rather than to laud the merits of any particular breaker, and in studying them for comparison, the reader should bear in mind that while they appear to favor the gyratory breaker, the jaw breaker was handicapped by its small size, low capacity, and the smaller width of throat. The author believes that for comparative tests the capacities should be more nearly equal and the tests should be continued over a greater length of time. In a test given by Bilharz, the results appear to be favorable to the jaw breaker over the gyratory.

§ 51. (*e*) *Size and Shape of Mouth.* — The gyrating spindle breaker in its annular breaking mouth has a much wider opening around the circle and, therefore, a much greater surface acting per revolution, than that of the jaw breaker with the same gape of opening, that is to say, receiving the same size of stone. The advantageous effect of this, however, is reduced by the fact that the number of gyrations per minute of the spindle breakers is less than the revolutions of the jaw breakers. On small machines the jaw breakers have a small area of mouth, while the spindle breakers, with the same gape, have a much larger area, owing to their annular form and are much heavier and cost more. This makes jaw breakers commendable for small mills.

§ 52. (*f*) *Distribution of the Breaking in the Mill.* — Where centralization

of the rock breaking at one spot is desirable, the large spindle breakers appear to have the advantage, but where the process is better carried out by having the rock breaking located at several points, this advantage may disappear.

At a Lake Superior mine there are eleven shafts each with a 24 × 36-inch jaw breaker, breaking to 12 inches and an 18 × 24-inch jaw breaker, breaking to 3 inches. These are accompanied by grizzlies and hand picking of nugget copper. One large spindle breaker would be out of the question here, because the graded breaking is needed to help the hand picking of the nuggets and two large spindle breakers instead of the two jaw breakers would probably not be so economical.

§ 53. (*g*) *Running Cost.* — The Tables 8 and 16, showing the estimated cost of breaking, bear out the commonly accepted idea that for small breakers the jaw pattern has the advantage, while for large breakers the spindle pattern has the advantage. This is, of course, mainly due to the large hoppers which can be used with the large spindle breakers and which economize labor by saving sledging.

It is interesting to note that the figure representing the average cost per ton for wearing parts of jaw breakers is considerably below that for spindle breakers. Whether this is a rule or merely a result of chance, the author is unable to decide without further tests and figures.

The advantage of the large spindle machines is illustrated by the experience at the Caledonia mill where a No. 6 gyratory breaker, tended by one man, breaks 210 tons of ore in 10 hours. Three No. 5 Blake-type jaw breakers formerly required 20 hours and 5 men to do the same work. The gyratory uses about the same horse-power as the three jaw breakers did. The saving made by the change was $27 per day.

In regard to repairs, the jaw breaker would seem to be much easier of access. The spindle breaker would probable cause fewer repairs on the building and foundation, as it runs with less vibration than a jaw breaker. It is for this reason that it can be placed higher up in the mill and on a lighter foundation.

§ 54. (*h*) *Fine Breaking.* — The claim that the spindle breaker can break finer than the jaw breaker for the same gape is logical. The creeping of the breaking head upon the dies or concaves will prevent packing by constantly opposing new surfaces to each other, while the limit to fine breaking with the jaw breaker is its packing.

§ 55. (*i*) *Friction.* — In comparing the two breakers as to the friction of the mechanism we have in the spindle breaker great journal friction on the driving pinion bearing, and upon the two gear hub journals. We also have the friction of the pair of bevel gears. On the other hand in the jaw breaker we have great journal friction divided between the two boxes of the driving shaft, great journal friction on the eccentric and the friction of the toggles. No data exist for giving values to these quantities. Tabulated for comparison they are:

	Jaw Breakers.	Gyratory Breakers.
Driving support journal friction	The two main bearings	The pinion pillow blocks.
Eccentric journal friction	The pitman eccentric	The spindle eccentric inner hub journal friction.
Driven support journal friction	Swing jaw pivot	Outer hub journal friction, step, and top journal.
Transmitting friction	Toggle sockets	Gear teeth friction.

§ 56. (*j*) *Continuous Compared with Intermittent Action.* — Spindle breakers are continuous; that is, they are working all the time. Jaw breakers are intermittent; that is to say, they are working a little less than half the time. To make this comparison complete, however, we must introduce the amount of surface being used for breaking. The complete statement will therefore be:

The jaw breaker is breaking with its whole surface for nearly half the time. The spindle breaker is breaking with nearly half its surface all the time. The word "nearly" means identically the same thing in both cases, and cuts off a little time in the former case and a little surface in the latter while the grains are coming to a bearing.

The continuous action of the spindle breaker is undoubtedly a mechanical advantage to the credit of the machine, in that uniform transmission of energy is more economical than intermittent.

The intermittent machine brings in the element of stored energy which is obtained by the heavy fly-wheels and high speed. The higher the speed, the greater the stored energy, and the less the variation in speed and consequently the less the throb which is sent back through the belts to the motive power. If a jaw breaker is slowed down while it is working, its lowest limit of speed will be passed and the machine will stop, because the accumulated energy does not add enough to the transmitted energy to break the rock. Reasoning the other way, the faster the machine revolves the greater is the ratio of the accumulated to the transmitted energy. This ratio approaches, but never reaches, equality. This would indicate that the faster a jaw breaker runs, the better and more economical it will be up to the mechanical limit that is possible. This is shown as follows: If a breaker handles 240 tons in 24 hours, this at 60 revolutions per minute would be 5.5 pounds per revolution, while at 300 revolutions it would be 1.1 pounds per revolution. That is, the variation in the power consumed from instant to instant and in the speed is less in the latter than the former case.

PART II.

FINAL CRUSHING.

Following a preliminary breaking as described in the preceding chapter it usually is necessary to further comminute the ore in order to free the grains of valuable mineral from particles of gangue and prepare it for concentration. The extent to which crushing is carried depends upon considerations that will be discussed in the following chapter. For this work the machines most generally employed are rolls, gravity and steam stamps, and various types of grinders. Many of these machines classed here as final crushers may be used as auxiliary crushers.

LIBRARY

CHAPTER III.

ROLLS.

§ 57. PRINCIPLE AND PURPOSE OF ROLLS. — Crushing rolls consist of two iron or steel cylinders *AA* (Fig. 20), revolving upon the shafts *BB* in the direction of the arrows and acting upon the lump of ore *C* on the principle of the toggle joint. The revolving rolls being held in position in their journals act radially on the lump gradually drawing it toward the narrowest space between them and finally breaking it by compression. Since rolls crush by direct pressure and since they are usually set to crush to a particular size, so allowing particles smaller than this size, to drop through without being subjected to further comminution, rolls are preeminent among machines for crushing with minimum fines. They are therefore especially suited for crushing brittle minerals such as galena, chalcopyrite, zinc blende, etc.

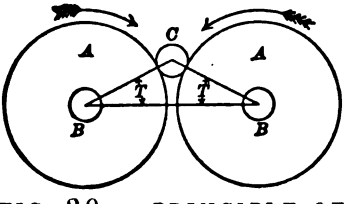

FIG. 20. — PRINCIPLE OF ROLLS.

When crushing malleable substances such as native copper, native silver, etc., or horn-silver rolls may either help or hinder subsequent treatment. The flattening of grains which are malleable, while the brittle rock is broken to a smaller size may be made a direct means of concentration by screening out the flattened grains from the finely broken rock. On the other hand in crushing native copper rock by rolls it is found that the copper is liberated from its rock in leaves, flakes, and thin arborescent forms wholly unsuited to jigging, thus causing great waste in the tailings. In crushing native gold ore by rolls the gold fails to be brightened preparatory to free amalgamation, the thin flakes fail to be broken up preparatory to concentration, and finally it is difficult to reduce the ore to a sufficiently fine state to liberate the gold. Rolls, therefore, do not find favor for crushing preparatory to amalgamation.

§ 58. GENERAL CONSTRUCTION. — (See Fig. 21.) The chief parts which enter into the construction of a pair of rolls are a pair of shafts upon which are usually mounted permanent cores of soft cast iron carrying shells of hard iron or steel, which constitute the crushing surfaces. These two shafts are of two kinds, one revolves in fixed, the other in movable boxes. The movable are held up toward the fixed boxes by powerful springs, the degree of approach being regulated by shims between the boxes or by compression bolts. All the boxes, springs, and shims rest upon a strong cast-iron frame. The springs are held up to their work by strong bolts or by the tensile strength of the frame. The shafts may be driven by gears and pulleys but are usually driven directly by pulleys. As geared rolls are very little used in the mills to-day, this description of rolls will be confined to belted rolls and the student is referred to Ore Dressing, page 75 and following, for a discussion of geared rolls.

§ 59. FRAMES. — The working parts of rolls are placed upon frames of cast

iron. These may be either two separate parts, the one carrying the two boxes at one end of the roll shafts, the other carrying the other two boxes, or the two frames may be united across the ends in which case the four parts are made into one casting. This latter construction is much to be preferred since the settling of the mill building does not disturb the alignment of the shafts and boxes.

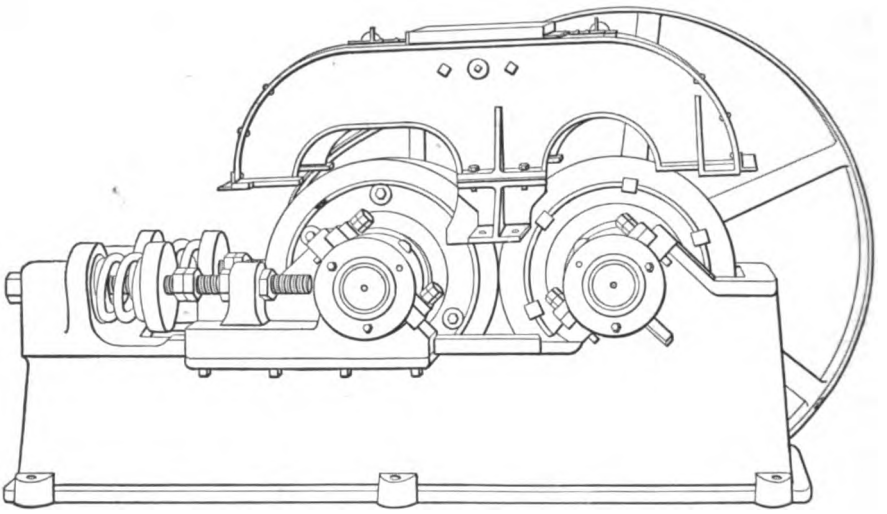

FIG. 21. — McFARLANE PARALLEL ROLLS.

§ 60. SHAFTS. — Mild steel or wrought iron is usually used for roll shafts. Two bearings are as a rule used. Sometimes in geared rolls where an overhanging gear is so heavy as to cause excessive strains in the shaft it has been found necessary to use a third bearing. This is to be avoided wherever possible since with three bearings the shaft causes greater friction if it gets out of line.

§ 61. THE CRUSHING CYLINDERS ordinarily consist of a permanent central core of soft iron which is forced upon the shafts by hydraulic pressure, and to the trued surface of which a removable shell or wearing part is fastened.

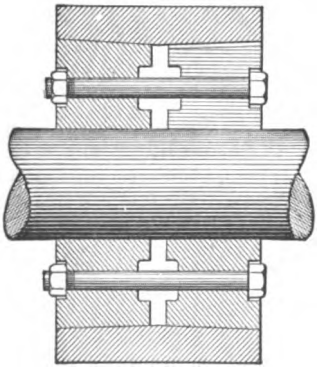

FIG. 22. — KROM'S METHOD OF ATTACHING SHELLS.

S. R. Krom makes his core and tires as follows: The core is in two parts (see Fig. 22), each a little less than half the length of the face of the roll shell; they are slightly conical, having their lesser diameters inward. One part is shrunk permanently to the shaft and fixes the position of the roll, the other is drawn into place by four powerful bolts. The inside of the tire has two corresponding conical surfaces. The movable half core is split on one side and springs enough by reason of the pressure of the tire to hug the shaft and prevent slipping. The core when made in one piece often is lightened by casting with a cored out center.

§ 62. ROLL SHELLS OR TIRES. — The thickness of roll shells varies from 2 to 5½ inches, the width and diameter being matters of design, and will be discussed later. The crushing

UNIVERSITY OF CALIFORNIA

surfaces are either those produced in the foundry or they are turned down in a lathe to true cylinders. The inside surface of the shell is generally turned slightly conical to fit the core. Roll shells of chilled cast iron are usually cast with staves of wrought iron on the inside to facilitate turning; wrought iron being more readily attacked by the cutting tool than is chilled iron. The shells are usually mounted and centered upon the cores by drawing them into place with bolts which may also act as keys, or they are wedged up into line by driving in wooden wedges. The former method is preferred, as the wooden wedges are troublesome to put in and, if the rolls are run wet, troublesome to take out. The nuts on the bolts holding the shells in place should be frequently inspected as the shells are likely to expand and work loose on the hubs.

§ 63. *Material for Roll Shells.* — A material for roll shells to be satisfactory should be as hard as possible to avoid attrition, tough enough not to chip, and not so malleable as to flow. Roll shells are made of cast iron deeply chilled on the outside; also of cast steel, rolled or hammered steel, chrome steel, and manganese steel. Ferro-aluminum and projectile steel have also been tried.

Among the mills we find that steel in some form is generally in use. Rolled-steel shells are almost invariably used to obtain the best results.

Chilled cast iron has the advantage of low first cost (2½ to 3½ cents per pound), and if a foundry is near by, the worn-out shells have a market value (¼ to ½ cent per pound). It has the disadvantage of short life and uneven wear, becoming at times deeply pitted on the surface, so much so as to seriously hinder the work of crushing, long before the shells are otherwise worn out, and consequently the weights of old shells are greater than with steel. It also chips at the edges with hard ore. Its hardness prevents it from being easily trued up, a difficulty which is not met with in the steels of mild or medium hardness.

Wrought-iron and mild steel shells have a tendency to flow or bead over at the ends too much, extending the length of the shell at both ends. On this account these metals do not find favor.

Cast steel is a medium-priced material (4 to 6 cents per pound) and has a medium life; the surface is not as reliable as that of the next three materials.

Forged steel, either rolled or hammered, is the most reliable material that exists. With reasonable attention it wears evenly. It costs 6½ to 10 cents per pound. It wears very thin before the shells are rejected, but the latter generally have no commercial value.

Chrome steel, made by the Chrome Steel Works, is forged steel containing chromium. It has all the advantages of forged steel and the manufacturers claim that it has longer life. It costs about 7 to 9 cents per pound.

Manganese steel, made by the Taylor Iron & Steel Co.,[1] has extraordinary hardness and toughness. It costs from 10 to 12 cents per pound and the manufacturers pay about 1 cent per pound for old shells delivered at the factory. At a test made in one mill manganese steel showed a remarkable life, but these results were never repeated. One of the worn-out shells in this test weighed 150 pounds and was $\frac{9}{16}$ inch thick. The other weighed 400 pounds and was 1⅛ to 1½ inches thick. The later shells gave out by cracking when but half worn out. The large size of the casting was thought to be the cause of the difficulty. Others have had the same experience due to the uneven quality of the metal. The manufacturers claim that while shells 4 inches thick crack, shells 3 inches thick do not. Their reason for this is that they cannot anneal perfectly up to 4 inches. When the material comes from the mold it is brittle and this brittleness is removed by annealing, which consists of heating to redness and plunging into cold water. On thick pieces there is apt to be a core

[1] American licensees for the Hadfield Manganese Steel of Sheffield, England.

separated in this operation which impairs the strength of the whole piece. It is also claimed that roll shells of this metal, that have become heated by work, expand and do not return to their original size when cool. They are liable, therefore, to cause trouble by working loose on their cores. This, however, might possibly be prevented in wet crushing by the use of wooden wedges between the shell and the core. Sometimes this expansion causes the roll to split longitudinally.

Chrome steel and forged steel appear to be excellent for roll shells, and if the difficulties of casting and stretching can be overcome, manganese steel will probably rank even higher. The final decision as to which will be used must be decided by the ledger. The items besides life which enter into this computation, are cost of shells at the works, the freight, the time lost in repairs, and the value of the old shells. Philip Argall reports an exception in the case of chrome steel. He has found it too brittle for roll shells. One set lasted only eight hours and one shell cracked entirely through and dropped off the core. A second set was tougher, but even these broke in a week's service, large pieces cracking off on the edges, in one case 14 inches long by 1¼ inches wide.

One mill reports that if the life of chilled-iron roll shells in tons be taken as 100 then the life of cast steel is 149; rolled steel, 158; manganese steel, 154; and ferro-aluminum, 94.

§ 64. *Truing Roll Shells.* — The greatest care is needed to make the rolls wear evenly. If the ends of the rolls are not in the same plane then each roll will lap beyond the other. This state of things, if allowed to continue, will make flanges on each of the two protruding ends. These flanges may be removed in the machine shop by turning down the roll, or buffing it down with an emery wheel. They may be removed on the spot with an emery block, a lever, and a weight. (See Fig. 23.) S. R. Krom has a slide rest and lathe tool adapted to truing up the roll shells in place. To keep the mill running and save time, it is well to have spare shafts with rolls and boxes upon them. The worn rolls can be quickly hoisted out and the new lowered into place. Each shaft should run only in its own boxes.

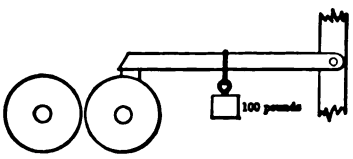

FIG. 23. — ARRANGEMENT OF EMERY ROCK.

It is far better to prevent the formation of flanges if one can, and so avoid the loss of time caused by removing them. If rolls are fed with the cheek pieces of the hopper close against the ends of the rolls, so that feed lumps 1½ inches in diameter can not be nipped by the rolls nearer than ¾ inch from the end, then it follows that the idle ends of the rolls will wear less and will presently become flanged and need to be turned. Much can be done to avoid this by putting a little horizontal grate with removable bars in the feed hopper. By leaving the center bars in place and removing the end bars the feed may be directed toward the ends of the rolls so wearing them down faster than the center.

Thin flanges at the extreme ends of the rolls are often removed by chipping with hammer and cold chisel. One of the most frequent difficulties met with is the wearing of deep grooves in the center. This may be corrected by directing the feed toward the edges for a few shifts and then gradually setting the rolls closer until the ridges in the center of the shell are in contact with those on the opposite shell. A few days of this treatment has been found to correct this trouble.

It is generally considered best to keep the ends worn slightly smaller than the middle, and so to forestall flange making, for if the edges are flanged and

the rolls are pressed tight together there is great danger that the edges will be nicked. This is particularly true with chilled iron. At one mill the rolls are fed by a trommel, the rotation of which in one direction one-half the time, delivers the ore toward one end of the rolls, while its rotation in the opposite direction the other half of the time delivers toward the other end and thus keeps the rolls true.

Another method of keeping the rolls true is to set them one day with, say ¼-inch end laps, the next morning set the laps at the opposite ends; the roll ends are said to wear more on the wearing day than they lose on the rest day. In two mills the plan has been adopted, with favorable results, of wearing the shells on the fine rolls until they have lost their surfaces too much, then handing them over to the coarse rolls where the inequalities are of much less moment. To effect this with the least loss of time, all of the rolls of a mill must be of the same diameter, face and. make, and spare shafts and boxes should be used.

A portable shell turning device is manufactured by the Sturtevant Mill Company. (See Fig. 24.) A pulley *P* drives the fly-wheel of the roll by means of a wooden roll *W*. The pressure delivered by the wooden roll is regulated by the screw *S*. The lathe tool *T* is made to fit the Sturtevant Rolls, and is attached to the roll frame directly.

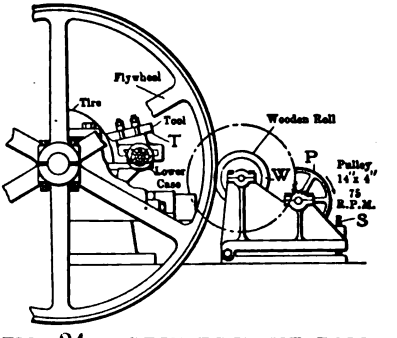

FIG. 24.—STURTEVANT ROLL-SHELL TURNING DEVICE.

§ 65. SIDE ADJUSTMENT. — To facilitate adjusting the rolls endwise, the Gates Iron Works furnishes special collars which are placed on the roll shafts on both ends of the bearing of that end of the roll shaft which is opposite to the driving pulley. They are in the form of a split clutch nut. When loosened they can, by turning them upon the shaft, give a very perfect end adjustment. When tightened they act as guiding collars. Side thrust which makes guiding collars necessary, is said by Gates to act in a direction toward the driven side. The Colorado Iron Works puts guiding collars of iron on the outer ends of each bearing. They fasten these to the shaft by taper pins and then place loose brass collars between them and the ends of the boxes. In the McFarlane rolls shown in Fig. 21, this adjustment is effected by first loosening the caps holding the journals in place and then setting over the journals either to right or left by means of adjusting screws. When the desired position is obtained the bearing caps are set down and tightened, so relieving the adjusting screws of any strain.

§ 66. FEEDERS. — A sudden rush of ore will choke the best rolls unless they are provided with an extraordinary amount of power and strength; a deficit of ore causes loss of time. A feeder furnishes the simplest corrective for both of these. This is obtained in practice either by taking the rock direct from some machine which limits output, for example, a breaker, or by using some of the feeders, such as the Tullock with feed sole shaken by cam and spring; the Vezin, with feed sole shaken by an eccentric; the Hendy, the roller feeder, the pushing-block feeder, or the Gates swing stirrup feeder. The Hendy feeder, if used, should have a feed chute in which the stream can spread to the width of the rolls. It is important that the feeder should deliver an almost continuous stream to the rolls. Rittinger's rule is that the feeder should give not less than four times as many impulses as the rolls make revolutions per minute. Vezin finds that 250 impulses per minute make a virtually continuous stream.

§ 67. Pillow Blocks and Their Alignment. — Means must be provided for regulating the distance apart of the rolls to suit the crushing and to compensate for the wear of the roll shells. The mechanism must be such that on the one hand the rolls when crushing cannot approach nearer than the distance at which they are set, and on the other that they will not recede at all with the ordinary work or crushing, but if a hard object like a drill point is fed, they will open and let it through to save breaking the machine. It is for this purpose that the boxes of one of the rolls are made movable. There are three ways of doing this and of maintaining the alignment or parallelism of the rolls.

(1) The boxes of the movable roll slide in guides independently of each other and are held up to their work by springs, the alignment of the rolls being accomplished either by putting in shims of equal thickness on each side or by using compression bolts to hold the boxes the proper distance apart.

(2) To connect the two movable boxes by a rigid frame which slides upon long guides on the two sides of the machine and gives perfect alignment. They are held up to their work by tension springs and prevented from coming too close by shims or compression bolts. The McFarlane rolls shown in Fig. 21 are an example of this form.

(3) The movable boxes are supported upon two vertical levers swinging from pivots below and are held up to their work by tension rods and springs. The distance between the rolls is maintained by lock nuts on the tension rods. The swing levers may be pivoted below independently of each other or united below in one solid U-shaped casting.

The method generally conceded to be best is to have the two movable boxes connected by a rigid frame which slides with ample bearing surface on the main frame of the machine itself. The fixed pillow-block is either bolted to the main frame or cast with it and lined up with it in the machine shop, or lastly, a pedestal is cast in the main frame into which a tubular box is dropped.

§ 68. Boxes or Bearings. — The boxes or bearings for the shafts are either divided with a cap and base, or they are made in one solid tube; in either case they are babbitted over the portion which takes the wear. The rolls shown in Fig. 21, have tubular journals of babbitt metal held in place by the cover plates of the boxes. Where a tubular box is used, it is usually aligned upon the pillow block by fitting it to the pedestal by cylinder and socket joint with vertical axis, or by ball and socket joint. The Gates Iron Works uses this design on their best rolls. The angle for the dividing plane between the cap and base varies in different makes from 45° to 50° with the horizontal. It is intended to conform to the resultant force obtained by combining the weight of the rolls, etc., with the pressure of resistance to crushing of the rock. Krom puts a water jacket on his boxes and by running water into this a hard-worked roll may be kept cool. By making the bearing surfaces of sufficient size and keeping out the grit there is no need of water cooling. Over the ends of the boxes shields are usually placed to prevent the entrance of dust and grit. A groove in the end of the box with cotton waste in it also prevents entrance of grit. For speed in rebabbitting boxes the spare set of shells, shafts, and boxes already recommended will serve. In addition to these a traveling truck overhead, with a differential hoist, will lift the old parts and carry them out, bringing back the new roll shaft, shell, and boxes. The time lost in changing may, with these precautions, be reduced to perhaps one-quarter of what it would be without them.

§ 69. Springs. — Steel springs are the standard for permanent work and the forms used are those known as spiral car springs. A sufficient number of these are put together to give the necessary compressive force. Steel springs

should be long enough so that there shall be no danger of the spirals ever closing together. The mode of applying the springs is to put them outside the movable box with the frame or bolts as the tension part, or outside the fixed pillow block with bolts to transmit the force. The latter arrangement appears to be most favorable. Springs should be given equal tension on each side to make the rolls wear evenly. The nest of springs is sometimes compressed between two plates by special nuts called compression nuts, as shown for the springs in Fig. 21. This takes the tension off from the main bolts and is to be commended. It makes the setting up of the tension bolts very easy, since the springs do not have to be relaxed as is the case where shims are used; the frame carrying the boxes of the movable roll merely being moved backward or forward and secured by means of the nuts on the main bolts.

The *average* resistance to crushing is probably less than 5,000 pounds pressure. This pressure will rise much higher and fall to nothing, according to the rate and size of feed. This pressure is sustained by the main tension bolts and by the inertia of the rolls. Pressures as high as 300,000 pounds have been used. This pressure makes the rolls practically rigid rolls. The pressure of springs, on the other hand, may be from 15,000 to 100,000 pounds. The spring pressure is usually taken up by the shims or compression bolts. The springs yield only when the resistance to crushing reaches their limit of compression. They then act as the safety valve on a boiler does, by preventing the pressure from rising greatly.

When rolls are set close it is common to remove the shims altogether. This is a costly practice, for the great spring pressure is by this means transferred from the shims, where it belongs, to the journals of the rolls which, in consequence, have to work with a constant pressure of 15,000 to 100,000 pounds upon them, instead of a variable pressure which generally averages less than 5,000 pounds. Brunton finds that not only the babbitt but also the shells wear out much faster under this treatment. Even when the whole spring pressure is required for the crushing the shims should still be used to prevent the rolls from quite coming in contact in case the feed stops.

Springs are used to enable the rolls to move for the purpose of passing hard objects such as hammer heads, pick points, etc. They may be dispensed with but when this is done a magnet must be used to remove iron from the ore before it reaches the rolls. The Denver Engineering Works Rigid Rolls are an example of this type and will be found described in Ore Dressing, Vol. III., page 1236.

Scrapers of iron are sometimes used to remove adhering fines from the face of the roll at the lowest point in its revolution. (See Fig. 25.) They are necessary in fine wet crushing with greasy ores like serpentine, which cause trouble by forming a slippery coating of slime on the surface of the roll.

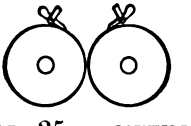

FIG. 25. — METHOD OF APPLYING SCRAPERS.

§ 70. DRIVING MECHANISM. — Rolls are called geared rolls when driven by belts and gears, or belted rolls when driven by belts alone. The former are very little used to-day and never for anything but slow-speed coarse crushing. Belted rolls are used for medium and high-speed rolls and for both coarse and fine crushing. As most of the rolls found in the mills are belted rolls, belted rolls alone will be discussed in this place. There are several methods of belting rolls. (See Ore Dressing, Vol. I., page 80.) Most of the rolls in use to-day are provided with a pulley for each roll, the pulleys being on opposite sides of the machine and driven from the same shaft one by an open and the other by a crossed belt. When one pulley is larger than the other as is usually the case the larger pulley is driven by the open belt. Pulleys

of the same size are often used to ensure that the rolls shall have absolutely the same peripheral speed.

§ 71. HOPPERS AND HOUSING. — As before stated rolls need special feeders to limit quantity, to prevent choking by overfeeding, to keep up a sufficient rate of feeding, and also to regulate wear. The ore so fed is received in a hopper placed directly over the rolls to retain flying fragments. This hopper may or may not be a part of the housing. The replaceable ends of the hopper extended downward by the ends of the rolls form the cheek plates which prevent lumps of ore passing by uncrushed. These cheek plates are made adjustable, in a direction at right angles with the shafts to keep up with the wear of the roll shells. The distance between the cheek plates and the ends of the rolls should also be adjustable, although it is not generally made so.

A housing of cast or plate iron enclosing the rolls to retain the dust, is sometimes used and may be so complete as to deliver the crushed ore in a spout below. It is made so as to be easily removable. Housings with a door for oiling are also sometimes used to protect gears.

§ 72. WIDTH OF FACE OR WIDTH OF ROLLS. — In deciding this matter several considerations are involved. Wide rolls of the same speed have more surface and hence greater capacity. But as the width and capacity increase, so also do the stresses to which the frame is subjected and which must be met by a greater first cost of the machine. With the increase in stresses and weight there is an increase in journal friction. On the other hand narrow rolls are much easier to keep true, and by running them faster, provided the speed does not exceed the limit for good work, the capacity lost by narrowing can be regained; the stresses are less and the first cost, weight, and friction are reduced. Of the rolls in use in the mills probably 70% are from 14 to 16 inches in width with by far the larger number 14 inches in width.

§ 73. DIAMETER OF ROLLS. — Rolls are used of diameters varying up to 54 inches. Rolls of large diameter apparently possess three advantages over those of small diameter: (1) The increased surface allows more rock to be crushed with a single pair of shells, but the gain is not important unless the renewals in the case of the smaller rolls are so frequent as to cause serious delay and added cost. The wear of shells per ton crushed would probably be the same in both cases. (2) The larger rolls can make a greater reduction in size of lump with one passage of ore through the rolls than the smaller, the angle of nip, which will be explained later, and the peripheral speed being the same in both cases. But since the larger rolls cost more on account of the larger parts and the greater strength required for the additional pressure, we may say in favor of small rolls that two pairs of them in series can make the same reduction as one pair of larger rolls with less first cost and much less sliming of the ore. Besides this the smaller rolls are more easily run and handled, the shells are more easily and securely centered and they wear more evenly. The journal friction and the power will probably be the same in both cases. (3) Larger rolls have a greater capacity than smaller rolls, the reduction being the same, since they can be run at a higher rate of speed on account of their more advantageous angle of nip. In case both the reduction and peripheral speed are the same for the large and small rolls, then the former will make the reduction more gradually and hence with less shock.

The diameter most used in the mills to-day is 27 inches, numerous examples are however found of 36-inch rolls, some 42-inch rolls, and several pairs of rolls 54 inches in diameter by 20 inches face are used. An argument against excessively large rolls is that in the great majority of cases they present a more favorable angle of nip than is necessary. Argall gives the following formula for diameter of rolls. $0.0476 \times D = Sn$ where D is the diameter of the roll

in inches and Sn is the diameter in inches of the maximum grain in the feed.

§ 74. PERIPHERAL SPEED. — The speed of revolution of rolls does not furnish a good criterion for comparing rolls. A roll 10 inches in diameter, making 90 revolutions per minute and a roll 30 inches in diameter, making 30 revolutions per minute, vary greatly in number of revolutions, yet the peripheral speed and hence the length of surface acting is the same in either case, *viz.*, 235.5 feet per minute. Considered from a mathematical standpoint, the same pair of rolls must run twice as fast to crush ½-inch cubes to ¼ inch as they must to crush 1-inch cubes down to ½ inch, the amount crushed being the same in both cases. Peripheral speed does therefore furnish the best basis for comparing rolls.

There is a wide variation in practice regarding the proper peripheral speed of rolls. Speeds are found ranging from 30 to 40 feet per minute of the old Cornish rolls, to 800 to 1,000 feet per minute and even higher for the modern high-speed rolls. From a study of the peripheral speeds of rolls in our American mills the writer concludes that the average speed for coarse rolls to-day is 650 feet per minute. Peripheral speeds as low as 100 feet per minute are not uncommon and one instance is given of coarse rolls running at a peripheral speed of 1,400 feet per minute. The average peripheral speed for fine rolls is about 900 feet per minute with speeds ranging from 625 to 1,400. There is undoubtedly, however, a given speed, for each different size of material, which gives the best results and where the maximum capacity is obtained with the minimum power. Argall after an extended series of experiments gives the following formulæ:

$$100 \times \frac{\text{Log } \frac{16}{S}}{\text{Log } 2} = P \text{ and } \frac{382}{D} \times \frac{\text{Log } \frac{16}{S}}{\text{Log } 2} = N.$$

Where D is the diameter of the rolls in inches; N is the number of revolutions per minute; P is the peripheral speed in feet per minute; and S is the size in inches of the maximum ore cube fed. These speeds are not necessarily correct for all ores or conditions but are the speeds at which Argall secured the best results and are safe and reliable to start any rolls with until a better speed to suit the given ore can be found. In securing the above results Mr. Argall used a crushing ratio of 4: 1; *i.e.*, the particles were broken to one-quarter size of feed, a ratio which should never be exceeded.

The curves given in Fig. 26 will enable the student to determine the proper speed for rolls of given diameter crushing feed the maximum size of which is given. It also shows the proper diameter of rolls necessary to crush a given maximum cube in accordance with Argall's formula for diameter of rolls given in § 73.

To illustrate from the diagram, we have:

For a 42-inch roll a maximum cube of 2 inches and 28 revolutions per minute.

For a 26-inch roll a maximum cube of 1.25 inches and 55 revolutions per minute.

For a 26-inch roll a maximum cube of 0.25-inch and 83 revolutions per minute.

For a 26-inch roll a maximum cube of 0.05-inch and 108 revolutions per minute.

For practical use, Table 19 has been prepared, showing the number of revolutions per minute that rolls of different diameter must have to produce different peripheral speeds.

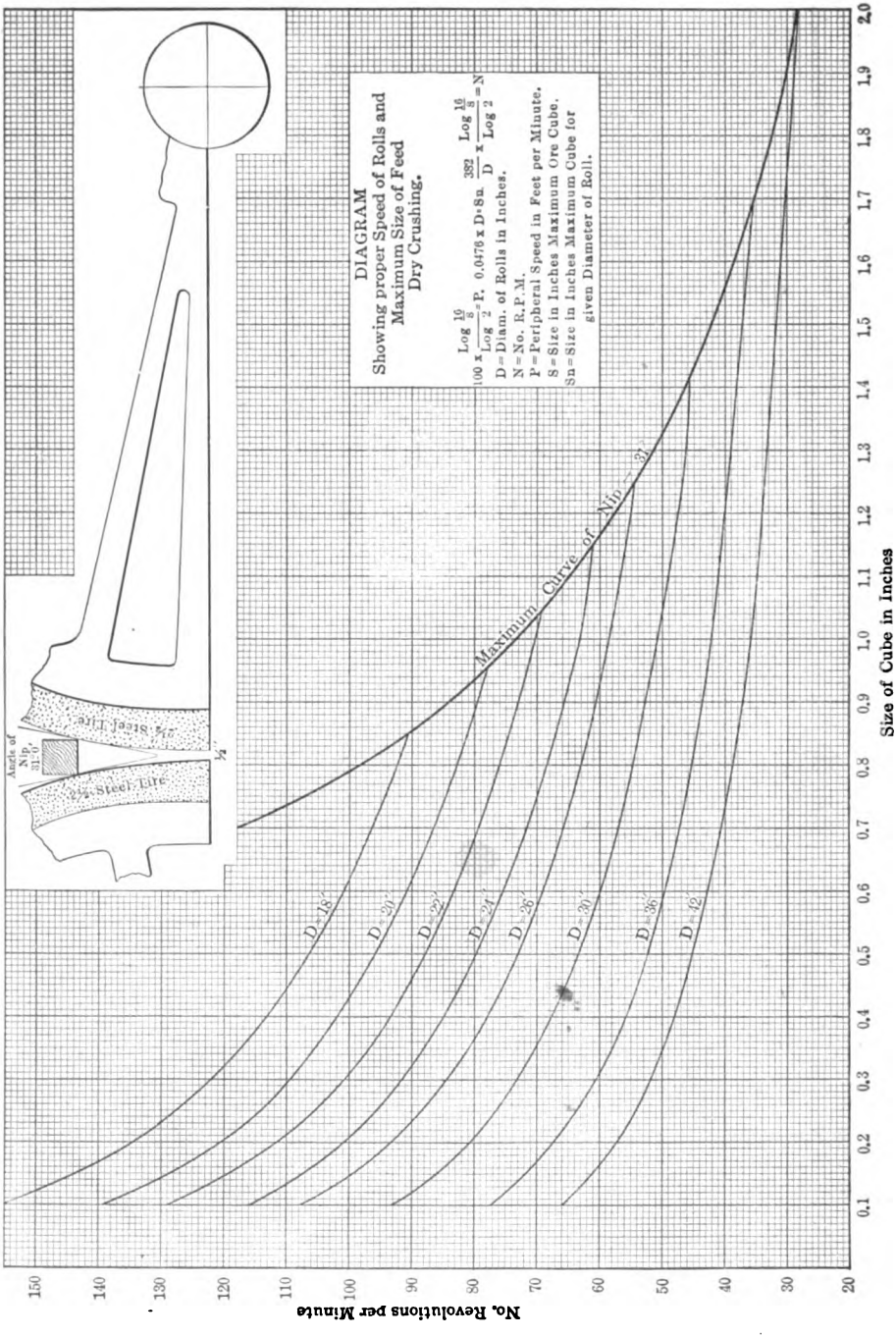
DIAGRAM
Showing proper Speed of Rolls and Maximum Size of Feed Dry Crushing.
$100 \times \frac{\text{Log } \frac{16}{8}}{\text{Log } 2} = P.\ 0.0476 \times D \cdot Sn.\ \frac{382}{D} \times \frac{\text{Log } \frac{16}{8}}{\text{Log } 2} = N$
D = Diam. of Rolls in Inches.
N = No. R.P.M.
P = Peripheral Speed in Feet per Minute.
S = Size in Inches Maximum Ore Cube.
Sn = Size in Inches Maximum Cube for given Diameter of Roll.
Maximum Curve of Nip = 31°
D = 18'
D = 20'
D = 22'
D = 24'
D = 26'
D = 30'
D = 36'
D = 42'
Angle of Nip, 31°0'
2½" Steel Tire
2½" Steel Tire
½"
Size of Cube in Inches
No. Revolutions per Minute

FIG. 26.

TABLE 19. — REVOLUTIONS REQUIRED FOR VARYING PERIPHERAL SPEEDS.

Diameter of Rolls in Inches.	Peripheral Speed in Feet per Minute.											
	50	100	150	200	300	400	500	600	700	800	900	1000
	Number of Revolutions per Minute.											
9	21	42	64	85	127	170	212	255	297	340	382	424
16	12	24	36	48	72	96	119	143	167	191	215	239
20	10	19	29	38	57	76	96	115	134	153	172	191
24	8	16	24	32	48	64	80	96	111	127	143	159
26	7	15	22	29	44	59	74	88	103	118	132	147
30	6	13	19	26	38	51	64	76	89	102	115	127
36	5	11	16	21	32	42	53	64	74	85	95	106
42	5	9	14	18	27	36	45	55	64	73	82	91

The general tendency seems to be toward high-speed rolls Another argument for this, in addition to those which have been brought out in the preceding sections, is that high-speed rolls are much smoother running, owing to their greater inertia which at the instant the lump is nipped supplies more or less force to aid in the crushing. How great this force is may be understood by considering it equivalent to the force necessary to move the mass of one roll away from another a very short distance in an extremely small fraction of a second. No data is at hand to compute this force, but under certain conditions it may become very considerable (thousands of pounds) where the speed is high and the lump yields with difficulty. This force is entirely supplementary to that exerted by the springs and varies as the square of the peripheral speed of the rolls other things being equal.

Some of the authorities advocate running one of the rolls slightly faster than the other in order to prevent the exact mating of the rolls and consequent possible unevenness of wear resulting therefrom. This is especially true with geared rolls. The E. P. Allis (Reliance) rolls are geared differentially 1 in 50, which is reported to work advantageously on gears and rolls. S. R. Krom's belted rolls drive the small pulley 1 in 100 faster than the large pulley. This is probably intended to prevent the former from lagging behind. The use of any considerable differentiation of this kind to produce grinding, with a view of increasing the crushing power, has been proved fallacious on hard brittle ores, requiring increased power without corresponding benefit. In regard to soft clayey ores, however, the case is different. S. I. Hallett, of Aspen, Colo., reports a special case of rolls used in a sampler which had run 33 months and crushed 82,000 tons. They were fed with 2-inch lumps from a breaker and crushed to 1 inch. The shells were soft steel and were never trued up. They were in fair shape at the time of reporting. One roll runs 25% faster than the other. The ore which is soft, being largely composed of limestone and clay, when crushed by ordinary rolls, forms ribbons or "pancakes" while the above differential adjustment tears the ore apart, completely overcoming the difficulty. The differentiation was found to be almost absolutely necessary, as it saved a great deal of labor afterward. The wear of the roll shells was slightly increased.

§ 75. Space Between Rolls and Angle of Nip. — Spaces vary from rolls close together or with practically no space, up to ¾ inch apart. The relation between the diameter of ore fed to rolls and the space between them, that is to say the amount of reduction, is most important if rolls are to do their best work. A common rule for coarse rolls is that the space should be one-half the diameter of the maximum lump fed. This, however, is an imperfect rule, as it does not include the consideration of the angle of nip.

§ 76. ANGLE OF NIP. — If rolls *C*, *D* (see Fig. 27) be fed with a sphere of rock *E*, the tangents to the rolls at *aa*, the points of contact with the sphere meet below, forming an angle *N*, which angle is called the angle of nip.

This angle may have values from 0°, where the space between the rolls is as large as the feed lump, increasing upward until the angle is so large that the rolls cannot nip the fragments. This angle of nip in any case will depend

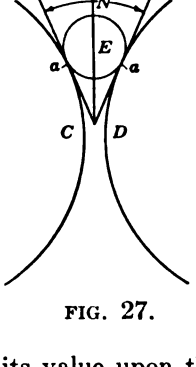

FIG. 27.

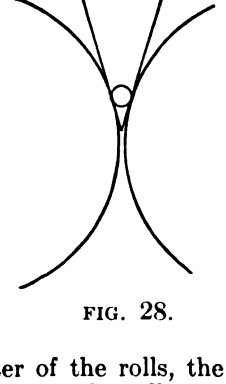

FIG. 28.

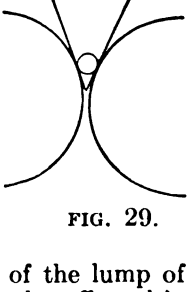

FIG. 29.

for its value upon the diameter of the rolls, the diameter of the lump of ore fed, and the distance apart to which the rolls are set. It is also affected in the following ways: It is diminished by increasing the diameter of the rolls, by increasing the space between the rolls, and by diminishing the size of the lumps fed to the rolls. Figs. 28 and 29 show that the larger rolls, acting on a given sphere, have smaller angles of nip. Figs. 28 and 30 show that larger spaces give smaller angles of nip. Figs. 28 and 31 show that smaller feed lumps give a smaller angle of nip.

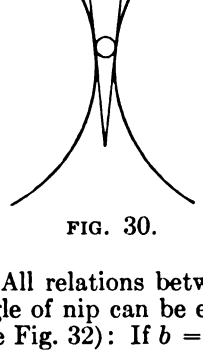

FIG. 30.

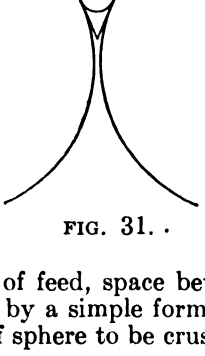

FIG. 31.

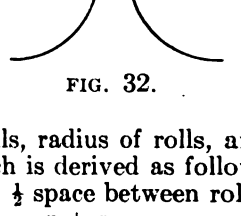

FIG. 32.

All relations between size of feed, space between rolls, radius of rolls, and angle of nip can be expressed by a simple formula, which is derived as follows (see Fig. 32): If b = radius of sphere to be crushed, a = ½ space between rolls, N = angle of nip and r = radius of roll = ½ diameter, then $\frac{r+a}{r+b}$ = Cosine $\frac{N}{2}$.

There are two values of this angle of nip which are of special interest to the ore-dresser, namely, when it equals the angle of friction and the rolls do no work; and the practical angle of nip, at which rolls will work satisfactorily. The angle N becomes the angle of friction when it is of such a value that a sphere

fed to the rolls will just slip upon the points of contact and therefore fail to be crushed.

A study of the rolls in the mills shows angles of nip varying from 8° 32′ to 48° 10′, with an average of about 27°.

The rolls having the lower values undoubtedly have more favorable angles of nip than is necessary. The rolls having the higher values are able to work probably through some favorable condition of the minerals referred to below. Between these extremes there must be some standard angle of nip which can be referred to as safe for average conditions. Practically the size fed to the first coarse rolls, that is to say, the rolls fed by the rock breaker, is pretty well settled by the practice in the mills to be 1½ inches (38.1 mm.) diameter, although this may not be theoretically the best size; there are then left the two variables, namely, the diameter of the rolls and the space between them. Throwing out the larger values of those rolls which work under very favorable conditions, we may assume that the angle of nip of rolls, 24 inches in diameter when set at ½ inch apart and crushing 1½-inch lumps, is the standard maximum safe angle. And then by making tables we can see under what conditions the different sizes of rolls can realize this angle and to what extent under other conditions they will differ from it. This angle is 32° practically (actually 32° 24′).

To exhibit the relations between the diameter of rolls, the size of feed, and the space between the rolls, when the angle of nip is 32°, Tables 20 and 21 have been constructed. Table 20 for different spaces, gives the size of feed that will give 32°. It shows, for example, that 24-inch rolls set with ½-inch space should be fed with lumps whose maximum size is not larger than 1.48 inches in diameter in order to get an angle of nip not larger than 32°.

TABLE 20. — SIZES OF FEED WHICH WILL GIVE AN ANGLE OF NIP OF 32° ON DIFFERENT ROLLS.

Diameter of Rolls in Inches.	Space Between the Rolls in Inches.						
	¾	⅝	½	⅜	¼	⅛	0
	The Size of Feed in Inches to the Rolls will be						
36	2.23	2.10	1.96	1.84	1 71	1 57	1.45
30	1 99	1.86	1.73	1.60	1.47	1.34	1.21
26	1.83	1.70	1.56	1.44	1.31	1.17	1.05
24	1.74	1.61	1.48	1.36	1.22	1 10	0.96
20	1.58	1.46	1.32	1.20	1 06	0.94	0.80
16	1.42	1.29	1.16	1.03	0.90	0 77	0 64
9	1.14	1.01	0 88	0.75	0.62	0.49	0.36

Table 21 for the different sizes of feed gives the spaces which will yield an angle of nip of 32°. It shows, for example, that 24-inch rolls, which are fed with 1½-inch lumps, should have a space as large as 0.512 inch between the rolls to get an angle of nip not over 32°.

TABLE 21. — SPACES WHICH WILL GIVE AN ANGLE OF NIP OF 32° ON DIFFERENT ROLLS.

Diameter of Rolls in Inches.	Size of Feed to Rolls in Inches.					
	1½	1¼	1	¾	½	¼
	Space between Rolls.*					
36	.046	.....	.....	.....	.....	.....
30	.280	.038	.....	.....	.....	.....
26	.432	.191	.....	.....	.....	.....
24	.512	.270	.031	.....	.....	.....
20	.666	.424	.185	.....	.....	.....
16	.822	.580	.340	.101	.....	.....
9	1.193	.851	.613	.372	.132	.....

* Where blank spaces are left the angle of nip is less than 32° with the rolls set close together.

§ 77. *The angle of nip* may be studied mathematically as follows:

Let E (see Fig. 33) be the lump of ore to be crushed. The elementary forces acting on E are R and T, which act normally and tangentially to the roll respectively. The force T will be a certain part of R depending upon the co-efficient of friction. Assuming the latter to be 0.3,[1] then $T = 0.3\ R$.

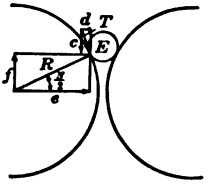

FIG. 33.

Resolving each force into vertical and horizontal components we get

$$e = R \text{ cosine } \frac{N}{2}$$

$$f = R \text{ sine } \frac{N}{2}$$

$$c = 0.3\ R \text{ cosine } \frac{N}{2}$$

$$d = 0.3\ R \text{ sine } \frac{N}{2}$$

The forces e and d simply compress the lump, being equal and opposite to the horizontal components of the forces exerted by the other roll. The force f tends to move the lump up, while c tends to force it down.

If $\frac{N}{2} = 5°$ and $R = 100$ pounds, then $f = \text{R sine } \frac{N}{2} = 8.7$ pounds, and $c = 0.3\ R \text{ cosine } \frac{N}{2} = 29.7$ pounds, and the lump will go down. The action of the other roll is to double these forces f and c, so that the total force acting upward is 17.4 pounds and the total force downward is 59.4 pounds.

[1] Kent, p. 929, gives stone on iron as 0.3 to 0.7.

If $\frac{N}{2} = 15°$ and $R = 100$ pounds, then $f = R$ sine $\frac{N}{2} = 25.8$ pounds, and $c = 0.3\ R$ cosine $\frac{N}{2} = 28.8$ pounds, and the lump will still go down.

If $\frac{N}{2} = 16°\ 30'$ and $R = 100$ pounds, then $f = R$ sine $\frac{N}{2} = 28.5$ pounds, and the lump will be almost in equilibrium.

If $\frac{N}{2} = 20°$ and $R = 100$ pounds, then $f = R$ sine $\frac{N}{2} = 34.20$ pounds, $c = 0.3$ cosine $\frac{N}{2} = 28.19$ pounds, and then the lump will fly out.

If the co-efficient of friction is larger than 0.3 then the angle at which the lump is in equilibrium will be greater. Thus, for a co-efficient of friction of 0.7 the angle becomes 35°. Practically the co-efficient would probably never even approach 0.7 in any case. The results of preceding calculations are arranged in tabular form in Table 22.

TABLE 22. — VALUE OF FORCES ACTING AT DIFFERENT ANGLES.

$\frac{N}{2}$	R.	f.	$2f$.	c.	$2c$.	$2c.-2f$.	Motion of Lump.
Degrees.	Pounds.	Pounds.	Pounds.	Pounds.	Pounds.	Pounds.	
5	100	8.7	17.4	29.7	59.4	42.0	Down.
15	100	25.8	51.6	28.8	57.6	6.0	Down.
16½	100	28.4	56.8	28.5	57.0	0.2	Down.
20	100	34.2	68.40	28.19	56.38	—12.01	Up.

The different minerals vary greatly in their co-efficient of friction, as follows: (1) Minerals that are tough and tenacious, as certain combinations of pyrite and siderite, require a narrower angle of nip than brittle minerals like calcite, barite, and quartz, since with the latter there is a crumbling of small particles which "sand the track." (2) Minerals that are slippery, as frozen ore, graphite, anthracite, and talc, have a small co-efficient of friction and therefore require a narrow angle of nip, while gritty rocks like sandstone have a high co-efficient and can use a wide angle of nip. (3) When rolls are fed wet, adhering sand may increase the co-efficient of friction and make a greater angle of nip possible than when the ore is fed dry and there is no adhering sand.

Rolls treat flat grains from a given sieve more favorably than they do the cube or sphere.

§ 78. Relation of Speed to Angle of Nip. — Theoretically, increase of speed, provided the reduction in size is little enough, can be made to almost any extent, but practically, high speed with much reduction will give trouble, owing to the refusal of the rolls to nip the lumps. The latter fly back until a dangerous amount collects and then the rolls choke.

This may be explained as follows: A lump of ore falling under the influence of gravity from heights of 6, 12, 18, and 24 inches will have final velocities of 340, 481, 589, and 681 feet per minute respectively. Now if the rolls are revolving at 900 feet per minute peripheral speed, then a certain part of the friction must be used to accelerate the lump of ore to this speed before it will be nipped. This amount will be greater or less according as the peripheral speed of the roll exceeds the velocity of the particle by much or little. This use of a part of the friction for the purpose of accelerating the particle does not in itself prevent the particle from being finally nipped but merely delays the nipping. It is this delay during the time necessary for accelerating the par-

ticle, which prevents the nipping, for until accelerated to the speed of the rolls, the particle is necessarily slipping and this slipping smooths the particle to a certain extent which causes the co-efficient of friction to be reduced and thereby prevents the particle from going through.

To further illustrate how reducing the peripheral speed raises the practical angle of nip and prevents slipping, the author cites the following experiences in one mill.

The Chicago & Aurora Smelting and Refining Co., for crushing matte, uses belted rolls 24 × 24 inches. The feed lumps are 1¼ to 1¾ inches in size and the matte comes in two forms, weathered and unweathered; the latter has probably at least four times as many of the large lumps in it as has the former. The spaces used are ¼ to ⅜ inch for weathered, ½ to ⅝ inch for unweathered. This gives extremes for angle of nip from 34° to 38° 44′. The matte will not be nipped with less spaces, showing that this maximum working angle of nip. One hundred and thirty revolutions per minute (817 feet peripheral speed) seems to give the best result. They were formerly run at 300 revolutions (1,885 feet peripheral speed), but they did not bite as well as to the present speed and gave trouble from choking.

§ 79. Ratio of the Diameter of the Hole in the Trommel to the Space Between the Rolls. — Since the wider the space the more favorable is the angle of nip, and the greater the tendency to run freely and avoid the making of fines, the mill man will naturally wish to know how wide a space he can use between his rolls and still get a large proportion of the crushed material to go through his screen. This ratio, in practice, ranges from 0.33 to 12.5. Where it is less than 1.00, the rolls are either doing choke crushing, or are not crushing finely enough to put the ore through the screen. In those cases where it is larger than 1.5, the rolls are either running with loose springs or they are sending their product to a coarser screen than the size for which they are crushing. In so great a range of values it is impossible to get an average that is worth anything. The author is inclined to the opinion that 1½ would be a safe value. For example, ½-inch space between rolls would crush finely enough for most of the product to pass through a ⅝-inch hole in the trommel, because ⅝ inch is 1¼ times ½ inch. This ratio may prove satisfactory for free crushing, but a much less ratio will serve for a choke crushing.

§ 80. Journal Friction. — By this is meant the resistance to revolving due to the pressure between the bearing and the shaft. There are several causes which contribute to increase this.

(1) The weight of the roll, shaft, and gear or pulley.

(2) The reaction from the pull of the belt or gear.

(3) The reaction from crushing the rock, which may include spring pressure.

(4) Speed. High speed increases it, low diminishes it.

(5) Lubrication. Neglect of lubrication increases it, attention diminishes it.

The resultant of the forces mentioned will cause a pressure between the journal and the bearing, and the loss of power due to friction will increase as this force increases.

In this connection there are three considerations of importance to the mill man. (1) The lubrication is under his control and should receive his careful attention. (2) The spring pressure should never be allowed on the roll journal in coarse crushing rolls under free crushing conditions, except when necessary to do the crushing at the moment of choke feed or when a drill point or other hard object is passing through the rolls; this he can control by judicious use of shims between the boxes or by compression bolts. In fine crushing with choke feed it is necessary to have the full pressure of the springs to do the

work, except, of course, when no feed is coming to the rolls. (3) The area of the journal bearing surface is fixed by the original design of the rolls. A large journal surface may not save anything on the loss due to friction, but it certainly will save on wear, and the life of the babbitt may be lengthened greatly by using large journals.

To demonstrate the importance of duly considering the size of the journals, the following computation has been made: In a certain mill the roll, shaft, core, and shell weigh about 5,000 pounds, and we may assume that the average normal pressure due to crushing is not over 5,000 pounds. The resultant of 5,000 pounds weight and 5,000 pounds crushing pressure on the two journals is 7,071 pounds. If each journal is 8×10 inches or 80 square inches of projected area, the pressure on one of the journals will then be $\frac{7,071}{80 \times 2} = 44$ pounds per square inch. But when a sudden rush of ore or a drill point comes and the rolls are sprung suddenly apart, we have momentarily acting upon the two journals a resultant amounting to 50,249 pounds, due to the whole spring pressure of say 50,000 pounds, and the weight of 50,000 pounds. This yields $\frac{50,249}{80 \times 2} = 314$ pounds per square inch. A 4×8-inch journal, the size used on some of the rolls, if doing the same work as above, would have pressure of 110 pounds and 785 pounds per square inch respectively. Going to the other extreme, a 9×16-inch journal would, if doing the same work, have pressures of 24 pounds and 174 pounds per square inch respectively. When we consider that with rolls set close and with shims left out, the larger pressure is acting all the time upon the journals, we see the importance of always using shims or compression bolts.

Kent [1] says that it is almost impossible to have over 200 pounds constant pressure per square inch as the box heats and the oil squeezes out. This shows the importance of using large-sized journals. Vezin designs his rolls for a maximum pressure when the whole spring force is on, as when a hammer head is passing through, of 264 to 533 pounds per square inch of projected area. He does not expect a pair of 27×14-inch rolls to have more than 300 or 350 pounds even when doing choke crushing on very hard rock. This amounts to a pressure of 60 tons between the rolls. Argall uses only 20 tons pressure on rolls of the same size. There is a decided tendency toward the use of larger journals.

The Gates Iron Works has succeeded, by lengthening the journals of rolls, in prolonging the life of the babbitt from 30 days to 9 months. Their tubular self-lining boxes makes this possible. The ordinary rigid boxes, however, if lengthened, would be liable to heat more and have their babbitt cut faster, owing to the flexure of the shaft, unless the diameter of the shaft is increased at the same time.

It is hardly necessary to add further that it is important to have the journals well protected from dust and to keep them well oiled.

§ 81. POWER. — Power used by rolls may be divided into two parts, that used in crushing and that used up in friction. The former depends upon the hardness of the rock, the amount of ore fed, the specific gravity, and the amount of reduction. The latter includes journal friction and friction of the gears when used.

The Hendrie & Bolthoff Manufacturing and Supply Company gives, for the McFarlane Parallel Rolls of the several sizes and running at the speeds specified, the power as is shown in Table 23.

[1] Kent, "Mech. Eng. Pocketbook," p. 936.

TABLE 23. — POWER FOR ROLLS.

Size. Inches.	Approximate Peripheral Speed. Feet per Minute.	Approximate Horse-power Required.
6 x 9	650	4
9 x 12	785	6
10 x 14	775	7
12 x 20	800	8
14 x 27	850	12
16 x 36	925	22

These figures probably represent the practice of the day on average ores with usual spring pressures. Tests made in the mills seem to indicate that they are conservative.

In regard to the belts and pulleys, however, rolls are furnished with sizes which, according to Nagle's formula,[1] can safely transmit two or four times the power named. This excessive width of belt and pulley are to provide for the increase of power demanded by a moment of choke feed, a drill point or other hard object. With two pairs of rolls, one of which is doing coarse crushing, and the other fine, the former running at one-half the speed of the latter, the leverage of the belt over the resistance to crushing must be twice as great in the former as in the latter, the power used being the same for both. This may be obtained by doubling the width of the belt, by doubling the diameter of the pulley, or by putting in gears.

§ 82. Quality of Crushing by Rolls. — This depends to a considerable extent upon the way that rolls are run. Rolls, when run slowly on a given quantity of ore, may be so crowded that the fine particles cannot tumble away from the coarse as soon as sufficiently broken. In consequence, such fine particles may be subjected to still another crushing due to the action of the particles one upon the other. This condition will be called "choke" crushing. If now the speed of the rolls be gradually increased, the percentage of fines will gradually decrease until a speed is reached at which the particles are treated individually, and there is plenty of room for the crushed fine ore to drop away from the coarser part under the acceleration of gravity and so escape further fine crushing. This condition will be called "free" crushing, and it is the condition under which the maximum coarse and minimum fine material will be made. Further increase of speed beyond this point gains nothing. In fact, it may cause the percentage of fines to rise again, since a given lump is crushed in a shorter period of time and hence shattered more.

The speed at which "free" crushing begins depends mainly on two things: (1) The rate at which the ore is fed to the rolls; for example, the faster it is fed the higher the speed at which "free" crushing begins. (2) The amount of reduction in diameter of the grains by one passage through the rolls; for example, to do "free" crushing, rolls will have to run faster when crushing 1½-inch lumps to ¼ inch than when crushing the same to ¾ inch with like rate of feed.

Rolls acting under "free" crushing conditions stand pre-eminently at the head of the list among crushers for producing a large proportion of coarser sizes with a small proportion of fines. "Free" crushing, when practicable, is the more advantageous of the two methods. It cannot be used, however, for crushing very fine, on account of the impracticability of maintaining space small and the surfaces true. For fine work the feed must, therefore, be increased so as to produce "choke" crushing, and even this will not give a high efficiency. For example, the author cites the finest pair of rolls in a cyanide

[1] Kent, "Mech. Eng. Pocketbook," p. 878.

plant crushing to 40 mesh. These rolls are set up so that they do not quite touch and when crushing they stand from ¼ to ⅜ inch apart under the full pressure of the springs. The amount that is returned to them, that is, the oversize of a 40-mesh trommel, amounts to at least 66% of what comes to the trommel.

Crushing with rolls set close and springs at moderate tension is a method often adopted for crushing a little coarser than the space between the rolls would indicate. The product, however, will be uncertain, for if the rolls are fed faster it increases wear of boxes in guides. Crushing with moderate reduction tends toward maximum coarse grains, and minimum fines, and this seems to be the line which deserves most attention. Crushing with great reduction tends to pulverize and to increase the proportion of fines.

The conditions under which rolls work does therefore have a powerful effect upon the quality of work performed. We may have rolls crushing with:

(1) Small reduction or large reduction of size.
(2) Loose springs or tight springs.
(3) Shims or no shims.
(4) Space or no space.
(5) Favorable or unfavorable angle of nip.

Gradations on all the above five lines effect the percentages of coarse and fine grains.

Table 24 gives a sizing assay test on the product of the coarse rolls at one of the large Montana copper concentrators. These rolls receive material through 38.1 mm. to 22.2 mm. in size and make a comparatively small reduction. The rolls are 15 × 28 inches and make 190 revolutions per minute.

TABLE 24. — SIZING ASSAY TEST ON PRODUCT OF COARSE ROLLS AT MONTANA CONCENTRATOR.

Size mm.		Percent. of Total Weight.	Cumulative Percent.	Assay. Percent. Copper.
Through.	On.			
.....	38.1	3.29	3.29	7.55
38.1	32.0	5.56	8.85	2.00
32.0	26.9	21.64	30.49	2.80
26.9	22.6	20.10	50.59	2.05
22.6	19.0	20.50	71.09	2.60
19.0	16.0	8.58	79.67	2.60
16.0	13.5	5.45	85.12	3.60
13.5	11.3	2.05	87.17	3.70
11.3	9.51	1.48	88.65	3.10
9.51	8.00	1.14	89.79	3.70
8.00	6.78	1.08	90.87	4.40
6.78	5.66	0.60	91.47	3.90
5.66	4.76	0.68	92.15	3.50
4.76	4.00	0.56	92.71	3.00
4.00	3.36	0.36	93.07	3.00
3.36	2.83	0.48	93.55	3.20
2.83	2.38	0.34	93.89	2.90
2.38	2.00	0.22	94.31	3.00
2.00	1.68	0.56	94.67	3.20
1.68	1.41	0.39	95.06	3.10
1 41	1.19	0.37	95.43	3.30
1.19	1.00	0.17	95.60	3.15
1.00	0.841	0.49	96.09	3.40
0.841	0 707	0.02	96.11	3.45
0.707	0.595	0.49	96.60	3.50
0.595	0.500	0.29	96.89	3.70
0.500	60 mesh	0.49	97.38	4.05
60 mesh	80 "	0.54	97.82	4.20
80 "	100 "	0.28	98.20	4.55
100 "	120 "	0.10	98.30	4.60
120 "	150 "	0.27	98.57	5.15
150 "	200 "	0.13	98 70	5.50
200 "	.....	0.90	99.60	5.70
Loss	.....	0.40	100.00	
Total.....	.....	100.00		

Table 25 gives a similar set of figures for the fine rolls at the same mill. These rolls receive feed 22.2 to 8 mm. in size, and make a greater reduction than do the coarse rolls. They are 5 × 28 inches and make 180 revolutions per minute.

TABLE 25. — SIZING ASSAY TEST ON PRODUCT OF FINE ROLLS AT MONTANA COPPER CONCENTRATOR.

Size mm.		Percent. of Total Weight	Cumulative Percent.	Assay. Percent. Copper.
Through	On			
19.0	16 0	0.90	0.90	4.20
16.0	13.5	1.85	2.75	2.55
13.5	11.3	3.45	6.20	1.90
11.3	9.51	6.28	12.48	2.25
9.51	8.00	11.93	24.41	2.00
8.00	6.78	16.72	41.13	2.00
6.78	5.66	7.62	48.75	2.00
5.66	4.76	8.19	56.94	2.00
4.76	4.00	6.32	63.26	2.20
4.00	3.36	3.74	67.00	2.10
3.36	2.83	4.54	71.54	2.05
2.83	2.38	2.87	74.41	1.95
2.38	2.00	1.53	75.94	2.15
2.00	1.68	3.82	79.76	2.15
1.68	1.41	2.17	81.93	2.10
1.41	1.19	1.89	83.82	2.20
1.19	1.00	0.70	84.52	2.20
1.00	0.841	2.01	86.53	2.35
0.841	0.707	0.05	86.58	2.30
0.707	0.595	1.97	88.55	2.50
0.595	0.500	1.08	89.63	2.70
0.500	60 mesh	1.84	91.47	3.00
60 mesh	80 "	1.55	93.02	3.10
80 "	100 "	1.08	94.10	3.55
100 "	120 "	0.37	94.41	3.80
120 "	150 "	0.87	95.28	4.40
150 "	200 "	0.17	95.45	4.30
200 "	.....	3.50	98.95	4.60
Loss	.....	1.05	100.00	.....
Total.....	.....	100.00		

These two examples should serve to show the quality of the work done by rolls. In the first case the rolls are making a small reduction and we note the extremely low percentages of fine sizes. In the second case the rolls are making a considerably greater reduction and we note a corresponding increase in the percentages of fine sizes. More will be said concerning the quality of work accomplished by rolls when we come to discuss the laws governing crushing, in a later chapter.

§ 83. CAPACITY OR QUANTITY CRUSHED BY ROLLS. — The capacity or the quantity crushed by rolls is the number of tons that can be crushed from a given size to pass through a certain size of hole in a given time, or as it is sometimes stated the number of cubic feet that can be crushed from a given size to pass through a certain size hole in a given time. The latter method is the more logical one as it furnishes the only correct basis for comparison between ores having different specific gravities. In free crushing, provided the spring is sufficiently stiff to hold the rolls to their work, provided also that the angle of nip is favorable, the capacity is dependent upon the speed, the width of face, and the space or distance the rolls are set apart; also perhaps to a slight extent in slow-moving rolls upon whether or not water is fed to aid the discharge of the crushed material; where the capacity is given in tons the specific gravity of the ore will also affect it. In choke crushing the capacity depends upon the measures given above and upon the pressure. The greater the pressure, the greater will be the reduction in size.

To illustrate the capacity of rolls, let the reader imagine that the rolls are rolling out dough in the form of a long ribbon. It is clear that if the rolls are speeded to twice the rate, the ribbon delivered per minute will be twice as long;

again, if the faces of the rolls are twice as wide, the ribbon will also be twice as wide; and, finally, if the rolls are set twice as far apart, the ribbon will be twice as thick. Either of the changes will have increased the quantity of dough put through to twice the amount. In dealing with ore, however, we have a non-plastic material, the volume of mixed coarse and fine broken ore being about one and three-fourths times the volume of the same weight of solid ore. In other words, a given volume of broken ore weighs only about 57% of what it would if it were solid. From this it follows that the maximum which can be obtained in practice is only about 57% of the theoretical solid ribbon which would be obtained if the ore were plastic. The compression of the ore by the rolls would tend to raise this figure somewhat, but on the other hand the impossibility of obtaining an exactly uniform rate of feed which would correspond to the maximum ribbon would tend to lower it.

The rule for computing the theoretical capacity of space rolls is $\frac{60\,PWS}{1728} = C$, where P represents the peripheral speed in inches per minute; W represents the width of the roll faces in inches; S represents the space between the rolls in inches; and C represents the capacity in cubic feet per hour. The actual capacity is much less than the theoretical. Argall has shown that there is a very close relation between the percentage of reduction and the amount of finished product for any given ore. By percentage of reduction is meant that 1-inch cube reduced to 0.75 inch is 25% reduction; to 0.5 inch is 50% reduction, etc. Argall has deduced, from a long series of experiments, a diagram, (see Fig. 34), from which, knowing the percentage of reduction, we can obtain the percentage of finished product or the percentage of the theoretical capacity delivered by the rolls as finished product. Applying this diagram to a specific case in which a reduction is being made from 1-inch cube to 0.25 inch; we start with 1 inch on the left and follow the diagonal line downward toward the right until it intersects the horizontal line marked on the left 0.25 inch. This intersection is found to be on the ordinate marked 75% reduction. Now taking 75% reduction we pass to the right-hand side of the diagram and follow the horizontal line there marked 75% to the left, until it intersects the line marked "Percentage of Finished Product for given Percentage of Reduction." This intersection is found to be on the ordinate marked 30%.

Therefore to compute the approximate actual capacity of a given set of space rolls we first compute the theoretical capacity by applying the formula and then from the diagram ascertain what percentage of the theoretical capacity is likely to be realized. The figures given by the diagram agree closely with those given by other authorities who give an average figure as 33%.

Argall gives another diagram (Fig. 35) which shows the capacity in cubic feet per hour of rolls of various sizes, running at the speed best suited for the size of feed they are assumed to receive.

In rolls crushing to fine sizes the principle of choke feed can be used to advantage as regards capacity.

This fact is illustrated by Table 26.

TABLE 26. — COMPARISON BETWEEN FREE AND CHOKE-FED ROLLS.

Diameter in Inches.	Face in Inches.	Revolutions per Minute.	Crushing from Inch.	Crushing to Inch.	Theoretical Capacity in Cubic Feet per Hour.	Actual Capacity in Cubic Feet per Hour.
26	15	110	0.1	0.02	86	30
26*	15	110	0.1	0.02	86	75

* Choke Fed.

§ 84. GRADED CRUSHING. — In crushing rock by rolls we may either reduce it by one passage through rolls set close, making the whole reduction at this one time, or the rock may be put through two or more pairs of rolls in series with spaces graded to suit the work, the space in the second finer than that in the first, the third finer than the second, and so on, the fines being sifted out between each crushing. The former method is called single-stage crushing. the latter is called graded crushing or crushing by stages. The effect upon the rock crushed is that the greater the number of stages the less fines to be lost in the concentration and greater saving of values, also capacity and economy of power.

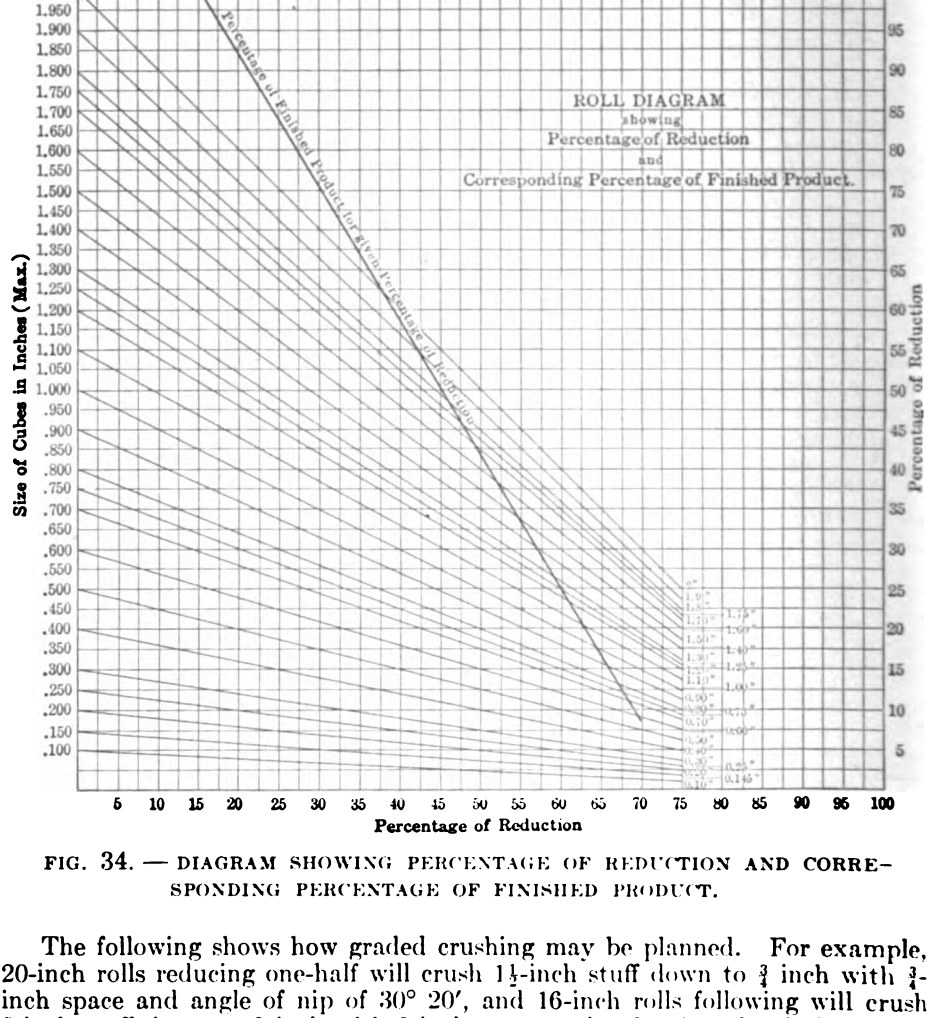

FIG. 34. — DIAGRAM SHOWING PERCENTAGE OF REDUCTION AND CORRESPONDING PERCENTAGE OF FINISHED PRODUCT.

The following shows how graded crushing may be planned. For example, 20-inch rolls reducing one-half will crush 1½-inch stuff down to ¾ inch with ¾-inch space and angle of nip of 30° 20′, and 16-inch rolls following will crush ¾-inch stuff down to ⅜ inch with ⅜-inch space and 24° 18′ angle of nip; while 30-inch rolls would be required to bring 1½ inch down to ⅜ inch at one passage with ⅜-inch space and 30° 42′ angle of nip. Of these two arrangements the former will keep the roll shells in better condition continuously, will have less

wear and tear, and the two machines, each making a reduction of one-half, will make much less fines than one machine crushing to one-fourth the diameter. The first cost will not be materially lessened by using the two small machines to replace the one large one, but the power will be less for equal capacity.

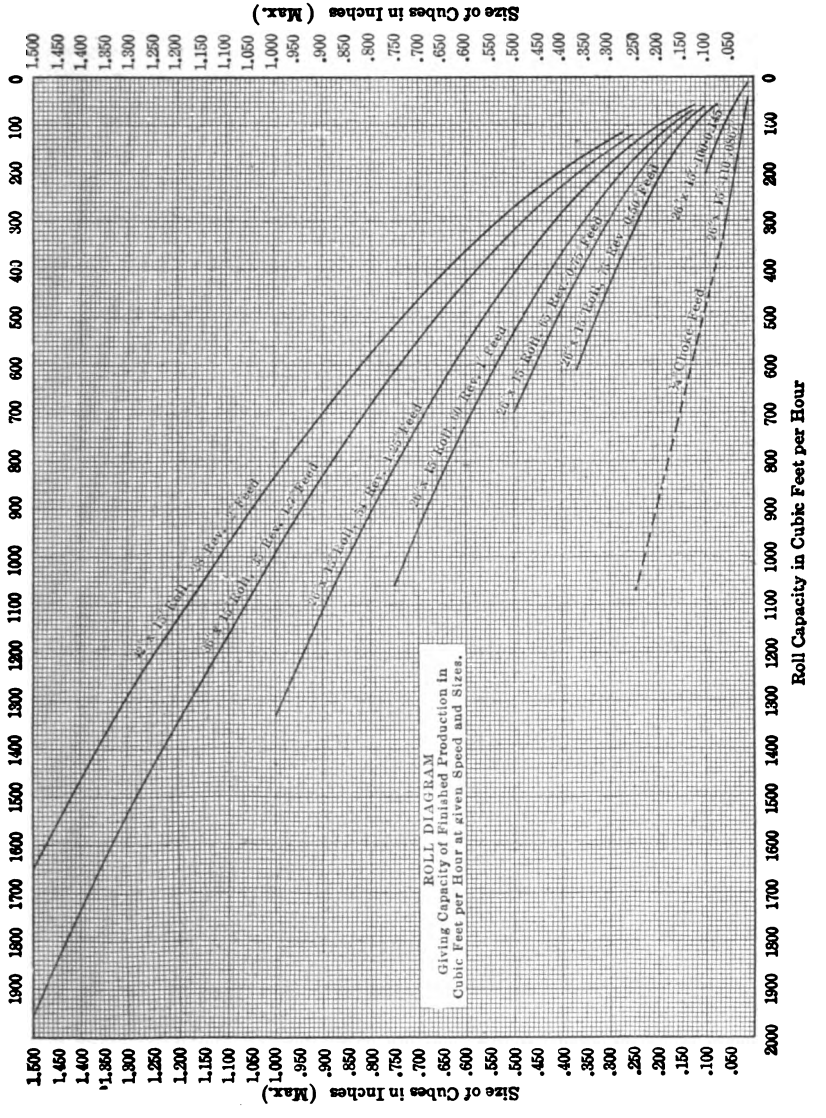
Size of Cubes in Inches (Max.)
Roll Capacity in Cubic Feet per Hour
ROLL DIAGRAM
Giving Capacity of Finished Production in Cubic Feet per Hour at given Speed and Sizes.
Close Feed

FIG. 35.

§ 85. COST OF CRUSHING BY ROLLS. — It seems to the author that 100 tons per 24 hours is a good average of the work done by rolls. This would require about 10 horse-power. The various items of cost for these rolls are as follows:

Power, 1.30 cents per ton; [1] attendance, 1.50 cents per ton; [2] wear of roll

[1] Assuming the cost of a horse-power to be $40 per year of 308 days, of 24 hours each. (Kent's "Mech. Eng. Pocketbook," p. 790.)

[2] Assuming that labor costs $3 per man per shift of 12 hours, and that one-quarter man is required per shift.

shells, 0.02 to 4.00 cents per ton; repairs, oil, babbitt, etc., 0.37 to 0.60 cent per ton; total, 3.19 to 7.40 cents per ton.

These figures do not include the cost of truing roll shells, as the author has no data on this. Moreover, this item is believed to be unnecessary where proper material is used for shells and the rolls are properly run. These figures are very general and are given more to indicate the separate items to be considered than to give accurate figures on cost. Thus in a mill it takes no more men to look after eight pairs of rolls than after four pairs. Again, the specific gravity and hardness of the ore treated will make a great difference in the power and capacity, and consequently in the cost.

C. W. Goodale gives the cost of crushing tailings at the Colorado Concentrator as 4.6 cents per ton, which includes the expenses for screens and elevators as well as rolls, but does not include power.

R. Hunt gives the cost of crushing by Cornish rolls in Cornwall. The rolls are 21 inches diameter and 19 inches face, make 8 revolutions per minute, and crush 40 to 60 mm. stuff down to 0 to 6 mm. at the rate of 60 tons per 24 hours. The two weigh 2,700 pounds when new, 1,600 pounds when discarded, and last 2,000 tons. The items per ton were as follows: Roll shells, 1¼ pence; labor, 2¼ pence; steam power (5 horse-power), 5 pence; wear and oil, 1 penny; total cost per ton crushed, 9½ pence = 19 cents.

CHAPTER IV.

STEAM STAMPS.

§ 86. STAMPS. THEIR PRINCIPLE, PURPOSE, AND CLASSIFICATION. — Stamps are probably the oldest devices for fine crushing preparatory to concentration. They are used both with and without water, but chiefly with water when crushing preparatory to concentration. While the earlier forms were very crude and inefficient, the later types show great perfection. They occupy in the scheme of mill work the position either of final crushers or of auxiliary crushers.

In all forms of stamps the crushing is done by the blow struck by a pestle or stamp upon the rock which is resting in a mortar. The stamp invariably comes down with accelerated motion, reaching its maximum velocity at the moment it strikes the blow. The momentum of the stamp is then spent in crushing the rock. It follows that the main wear will come upon the end of the stamp and upon the bottom of the mortar; these parts are made replaceable and are called shoe and die respectively.

Stamps are best fed with a product which has a uniform maximum size of lumps, such as will be received from a breaker. Automatic feeders are therefore not only practicable but advantageous.

The product of stamps passes usually through a screen and the larger fragments are retained in the mortar until they are crushed small enough to pass through. Stamps are especially applicable to crushing ores of gold and silver preparatory to amalgamation and concentration, native copper rock preparatory to concentration, and a variety of ores, such as cassiterite, chromite, graphite, etc., preparatory to concentration. Stamps are particularly useful where fine crushing in one operation is desired. They are not suitable for crushing ores in which the valuable mineral is coarsely disseminated and friable.

The two chief types of stamps which find application in the mills are steam stamps and gravity stamps. Beside these we have similar machines actuated by air, water, or springs. These, however, will not be discussed in this place.

STEAM STAMPS.

§ 87. PURPOSE AND PRINCIPLES OF ACTION. — Large steam stamps are to-day used exclusively in the Lake Superior district for the crushing of native copper rock. These machines consist of a vertical stamp shaft which is forced down to strike its blow, and lifted up preparatory to striking the next, by a steam piston. The stamping is done in a mortar provided with a screen to prevent the particles from issuing until they are reduced to standard size. The blow is received upon a die placed in the bottom of the mortar. The ore, being on the die, is broken small by the blow. Water is fed with the rock. The large machines are of enormous capacity, and with these the limiting screen has holes $\frac{3}{16}$ inch (4.76 mm.) in diameter or larger.

§ 88. FOUNDATIONS, ANVIL BLOCKS, MORTAR, SCREEN, AND FRAME. — The stamp rests on a solid concrete foundation averaging 18 feet long, 18 feet

wide, and 16 feet deep. The mortar bed or anvil block is shown in Fig. 36 and is composed of four parts. The base is rectangular and measures 9 feet by 11 feet 8 inches. The body which is cylindrical is made up of three horizontal sections whose outside diameter is 7 feet. These four pieces weigh about 80 tons and rest directly upon the foundations.

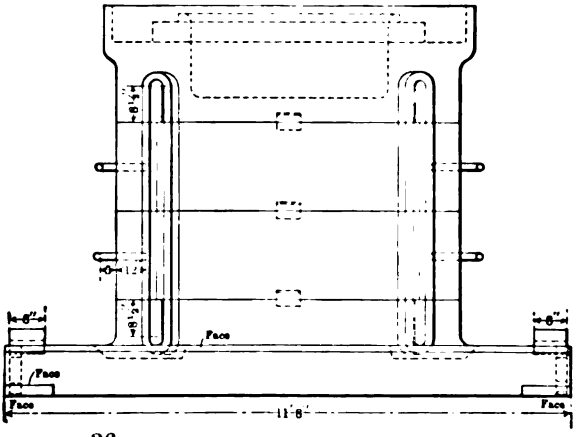

FIG. 36. — ANVIL BLOCK OF STEAM STAMP.

The mortar is a circular cup-shaped casting, 7 feet in outside diameter and 2½ feet high, in which the cavity is 4 feet in diameter and 2 feet deep. This mortar is provided with suitable lugs for fastening on the screen frame above by bolts and the mortar block below by links. The screen frame consists of four distance pieces 2½ feet high, on which rests the top plate attached by bolts.

This screen (1), which is cylindrical (see Figs. 37*a* and *b*), is held between the mortar and the top plate (2). It is surrounded by a cylindrical splash guard (3) which has discharge openings at the bottom. The stamped stuff discharges through the screen and these openings into the trough (4), which is cast in the mortar block proper. This trough has replaceable liners, and discharges on opposite sides of the stamp into launders. The top plate is provided with openings for the stamp stem and for feeding the copper rock.

The frame is independent of the anvil block and rests on two sills and two girders, which in turn rest on the foundation. The sills are of a hollow-box section; the main sills are 14 feet 2 inches long and the girders are 14 feet 9 inches long.

The frame (see Figs. 38*a* and *b*) consists of four heavy round columns held together at the top by a rectangular casting which also serves as a support for the steam cylinder. The lower ends of the columns are bolted at the ends of the girders and sills. These four columns support the guides by distance pieces and tie rods. These are placed about two-thirds of the way up the column and in addition to holding the guides in place, serve to stiffen the whole structure.

§ 89. DIE, RING, STAVES, AND SHOES. — In the mortar (see Figs. 37*a* and *b*) is placed a die which is a flat disc in the form of a truncated cone with smaller diameter uppermost. This receives the blow and bottom wear. Around the die is placed a ring, which serves to fill the space and to support the staves which are wedge-shaped in section. The staves take the side wear. The last stave put in, called the key stave, or king piece, is a reversed wedge, and is

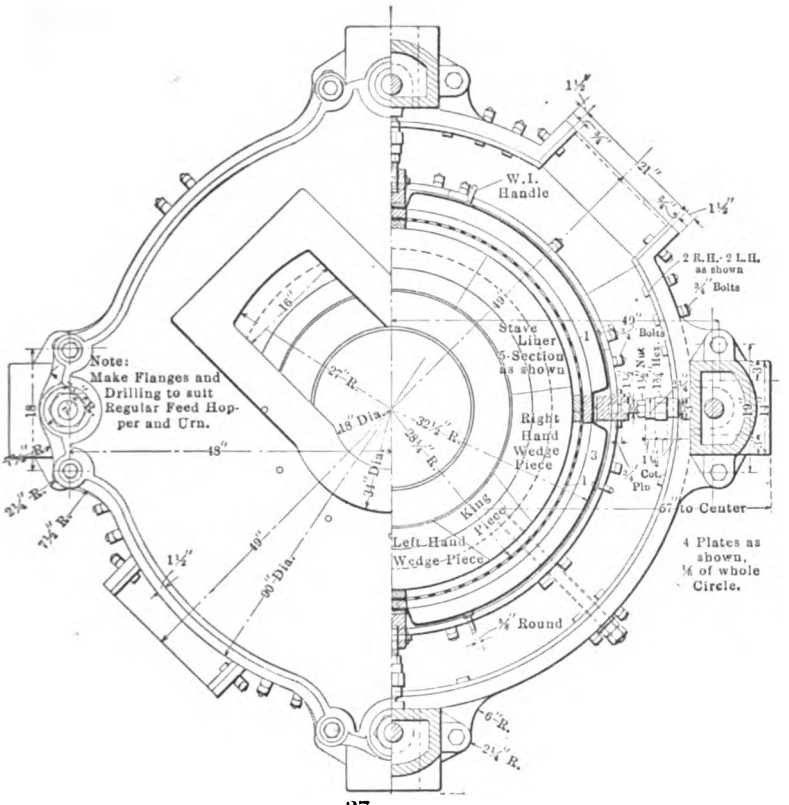
W.I. Handle
2 R.H. 2 L.H. as shown
¾" Bolts
Stave Liner 5-Section as shown
Right Hand Wedge Piece
Left Hand Wedge Piece
King Piece
Note: Make Flanges and Drilling to suit Regular Feed Hopper and Crn.
⅛" Round
67" to Center
4 Plates as shown, ⅛ of whole Circle.

FIG. 37*a*. — PLAN.

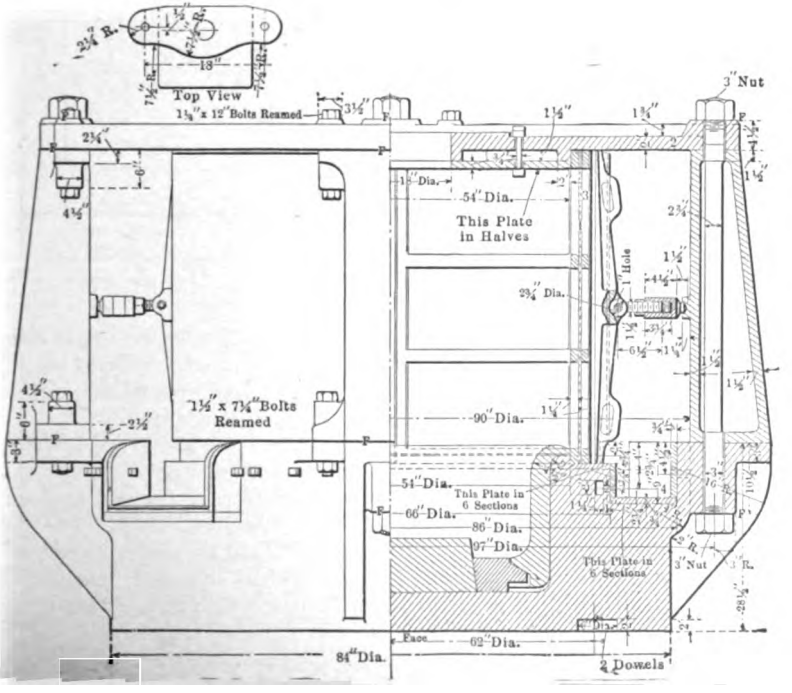
Top View
1⅛" x 12" Bolts Reamed
3" Nut
.54" Dia.
This Plate in Halves
1" Hole
1½" x 7¾" Bolts Reamed
90" Dia.
54" Dia.
This Plate in 6 Sections
66" Dia.
86" Dia.
97" Dia.
This Plate in 6 Sections
84" Dia.
62" Dia.
2 Dowels

held in place by a bolt through the sides of the mortar. The two adjacent staves have special forms to conform to this key.

The shoes (see Figs. 38*a* and *b*) are cylindrical discs from which two opposite segments have been removed; this makes a long and narrow shoe along the sides of which rock can settle to be crushed later as the stamp rotates to new positions. Since the outside margin of the shoe does the main work of crushing and in consequence wears faster than the center, it is common to make a slight depression in the center of the shoe to equalize the conditions. Upon the top of the shoe is a dovetail which is straight on one side and curved on the other. This finds its counterpart in the stamp shaft. The spare space is taken up by driving in a key with shims along the straight face.

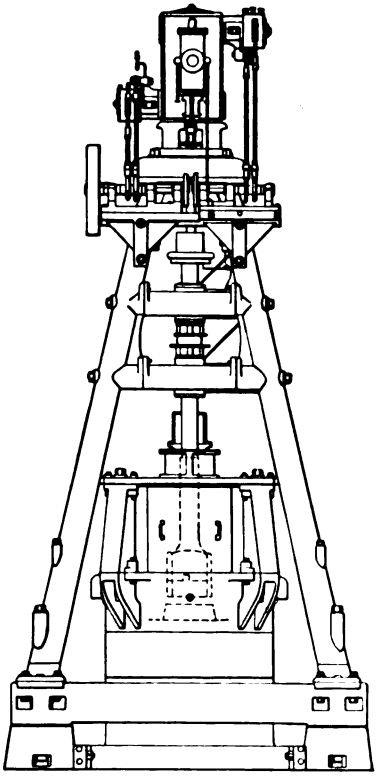

FIG. 38*a*. — STEAM STAMP.

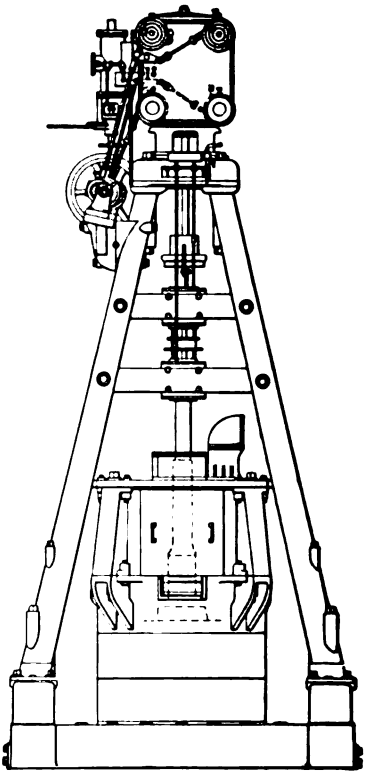

FIG. 38*b*. — SIDE ELEVATION.

The die, ring, staves, and shoes are all made of a fine chilled cast iron, cast from mottled and white charcoal pig, capable of taking a very deep chill. This material costs something like 4 cents a pound and has proved far better than any other material to withstand the wear of heavy stamps.

The dies wear down to half their thickness but the wear is comparatively slow as the die is always protected with 4 to 6 inches of rock. As the shoe and die wears down the capacity of the stamp is reduced toward the last as the mortar must be filled fuller with rock in order to reach the shoe.

§ 90. STEAM CYLINDER, VALVES, AND VALVE GEARS. — In single cylinder steam stamps the cylinder is generally 20 inches in diameter with a 24-inch stroke. It is fitted with four valves of the Corliss type, each driven by its own

eccentric. The valve arm instead of being keyed to the valve stem, is held in place by an adjustable connection. In this way all the valves are independent of each other, and each one can be set and adjusted so as to give the best results. This is a very simple operation, as the lap can be changed by turning two set screws in the adjustable connections between the valve stem and the valve arm, and the angular advance can be changed by turning the eccentric on the shaft to which it is clamped.

In order to show clearly the valve setting at all times, there is a brass dial representing a cross-section of the valve seat and port, fastened on the end of the valve bonnet. Inside of this dial is a second dial representing a cross-section of the valve; the inner dial being carried by the valve stem. The relative positions of those dials show the valve positions at all times. The graduations which are provided also indicate the amount of lap. The exhaust valves are driven through wrist plates; the inlet valves are driven direct from the eccentrics. The eccentrics for the bottom of the cylinder are mounted on a shaft driven at a uniform speed by a belt from an independent engine. The eccentrics for the top of the cylinder are mounted on a second shaft driven from the first shaft by a drag link. The center of this second shaft is offset, thus causing it to move at a non-uniform speed. This gives the top valves very quick opening and closing motions.

§ 91. The Stamp Shaft, Pulley, and Guides. — Fig. 39 shows the shaft of a steam stamp. In all designs of stamps the shaft is about 8 inches in diameter, serving to give weight to the blow. In every instance it has a dash pot or bonnet connection with the piston rod above, and is widened to a foot or hub below, which is of the same cross-section as the shoe. The shoe itself is keyed on as previously described. The shaft has two keyways in which slide the feathers of a rotating pulley. This pulley is belt-driven by the mill engine and turns the shaft through one complete revolution once in every four blows of the stamp. The guides are simply babbitted boxes in which the stamp makes its journey up and down. They are supported on heavy cross bars on the main frame.

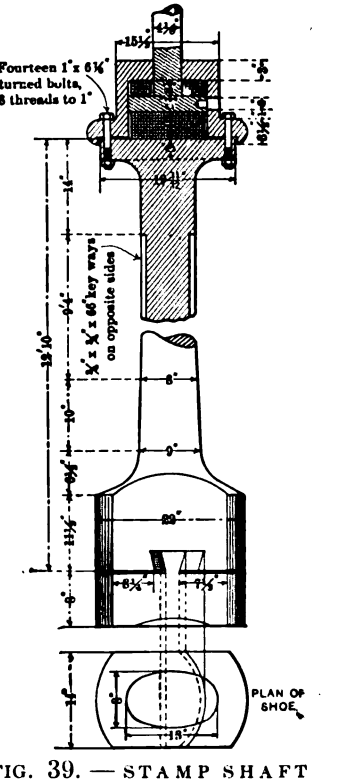

FIG. 39. — STAMP SHAFT AND SHOE.

§ 92. Safety Devices. — As these machines have no crank and connecting rod to stop the motion at the two ends of the stroke, other means besides the steam cushions already mentioned must be provided to prevent the piston from going too far. The most common method employed to prevent breakage in this way is to have a bonnet on the flange at the upper end of the stamp shaft. In this the flange on the piston rod plays between rubber cushions above and below. (See Fig. 39.) Some of the stamps are arranged with the lower portion of the steam cylinder counterbored to about 0.32 inch larger diameter than the remainder and there is an extension below the port opening which acts as a dash pot. Still others are provided with dash pots at the coupling between the piston rod and the stamp stem. A steam cushion is also largely relied upon to stop the stamp at both ends of the stroke.

§ 93. FLOORS, BINS, AND FEEDING ARRANGEMENTS. — There are usually four floors for operating these stamps, *i.e.*, the stamp passes up through four floors of the mill. Upon the upper floor access may be had to the cylinder and valve mechanisms, the third floor is for the dash pot or bonnet. The second is the feeding floor for water and rock, also for the guides and rotating pulley and the first or lower floor is for tending the screens and conveying launders.

To the rear of the stamp is placed a bin which at Lake Superior holds rock sufficient for 14 hours' feeding. It is supplied from a track above and the bottom slopes three ways toward the discharge gate.

A chute is provided to convey the rock from the gate to the stamp. This chute slopes at such an angle that the ore will either just slide or just not slide. The man who feeds the stamp simply allows the ore to slide down this chute as the stamp needs it or pushes it forward with little exertion. The chute also gives opportunity for picking out high-grade ore for direct smelting and the removal of chips, bits of rope, etc., which would be likely to clog the screens and interfere in other ways.

An indicator bell is struck by the flange of the stamp stem when the rock gets to its low limit and it is time to feed more. This indicator is kept at the same height throughout the life of a shoe and die.

§ 94. DISCHARGE. — The flow of the sand and water through the screens is increased by the swash and splash of the stamps. Steam stamps give a greater splash than gravity stamps, not only because they are wider, heavier, and swifter, but they are lifted above the level of the water at every stroke. A stone dropping *in* water stirs the mud when it reaches the bottom. A stone dropping *into* water makes a great splash and wave on the surface in addition to stirring the mud below.

The height of discharge, so important in the gravity stamp mill, is also of interest here. As the die wears down the height of discharge is increased and the capacity of the stamp accordingly reduced.

For discharging nugget copper from the mortars of steam stamps while the stamps are in operation, two kinds of discharges are used: the Krause mortar discharge and the mortar jig discharge.

The Krause mortar discharge consists of a 4-inch pipe entering the side of the mortar 12 inches above the die and half way up the staves. The pipe slopes down outwardly at an angle of about 45° and has a side pipe entering through a tee and admitting a steady flow of water; in fact it is a hydraulic classifier. The splash and turmoil in the mortar continually bring nuggets of copper and pieces of rock into the entrance of the pipe at the upper end. The copper nuggets can find their way down to the lower end of the pipe against the rising current while the rock fragments cannot do so. At the lower end there is a device something like a molasses spigot. The nuggets are drawn off periodically by opening this. In one of the amygdaloid mills of the Lake Superior district 12.83% of the total copper in the rock fed to the steam stamps is saved by the Krause discharge in a product assaying 96% copper.

The mortar jig has within the mortar four jigging sieve boxes, two on each side of the mortar. The jigging sieves are about 4 inches by 12 inches with 1-inch holes and a depth of about 6 inches. The top of the sieve boxes is about 15 inches above the die. The four plungers, 6 × 12 inches in size, are outside the mortar and are operated by eccentrics much as in an ordinary jig. A plug opens above the screen for removing large nuggets and a gate opens below for removing small nuggets from the hutch. The amount for copper saved by this device is far beyond what was formerly obtained when the nuggets were only removed at the time of changing a shoe.

§ 95. WATER USED. — About 5½ tons of water are required per ton of

ore. An increase of the quantity of water will increase to some extent the capacity of the stamps, by removing at an earlier moment the grains ready to depart from the mortar. The increase, however, is liable to give great embarrassment in the mill below, where the washing machinery will be called upon to handle the resulting increased quantity of water. The argument for much water, provided the washing machinery could handle it satisfactorily would be exactly opposite in the case of the brittle sulphides of copper from what it would be with the native copper rock, for in the former a particle of soft sulphide, left to receive another blow, may be made wholly into slimes, while with native copper the thin leaves, flakes, and arborescent forms need a little more stamping to break them up to a state in which gravity will act properly, even at the expense of some sliming.

§ 96. CAPACITY OF STEAM STAMPS. — The capacities of steam stamps in use to-day vary greatly. The capacity is greater in those mills which crush soft amygdaloid rock than in those which crush hard conglomerate. The variation is between about 400 tons on conglomerate to 500 or 700 tons for amgydaloid and even 1,000 tons in the case of unusually soft rock. Present practice in the Lake Superior district is to stamp through $\frac{5}{8}$-inch screen 0.625-inch round hole. Former practice was to crush through $\frac{3}{16}$-inch (4.76 mm.) round hole, but tests demonstrated that coarser crushing not only resulted in greatly increased capacity but gave lower mill tailings.

§ 97. POWER. — Figs. 40*a* and *b* show the indicator cards taken from the top and bottom of the cylinder of the Nordberg single-cylinder stamp. These cards show 198 indicated horse-power. The capacity was 550.4 tons per 24 hours or 0.1164 tons per horse-power hour. The tandem-compound stamps show an indicated horse-power of 246.7 and have a capacity of 0.1195 tons per horse-power hour.

§ 98. COST OF CRUSHING BY STEAM STAMPS. — Table 27 shows the estimated cost of crushing by steam stamps first on the softer amygdaloid rock and second on conglomerate.

TABLE 27. — ESTIMATED COST OF CRUSHING BY STEAM STAMPS.

	Average Cost per Ton Crushed.	
	On Amygdaloid Rock. Cents.	On Conglomerate. Cents.
Labor	1.600	1.846
Power	12.152	12.152
Screens	0.139	0.258
Shoes	0.475	2.350
Dies	0.054	0.112
Rings	0.041	0.028
Staves	0.071	0.102
Repairs	0.385	0.385
Water	1.639	1.639
Total	16.556	18.872

§ 99. USES FOR WHICH STEAM STAMPS ARE ADAPTED, AND QUALITY OF THEIR WORK. — These machines are the most powerful crushers known. For rock carrying native copper they seem indispensable, even though they may slime a great deal of copper. For crushing brittle ores preparatory to jigging, engineers are generally of the opinion that they slime the ore too much. They have not proved successful for stamping gold ores. They have been tried in the Black Hills and given up. Many, however, are still of the opinion that with suitable modifications they might prove successful.

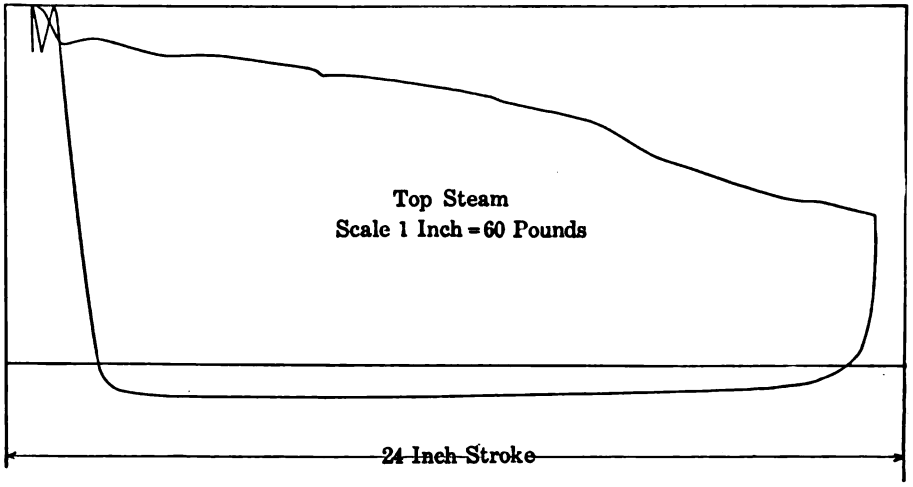

FIG. 40*a*. — INDICATOR DIAGRAM. TOP STEAM NORDBERG 20 BY 24-INCH STAMP.

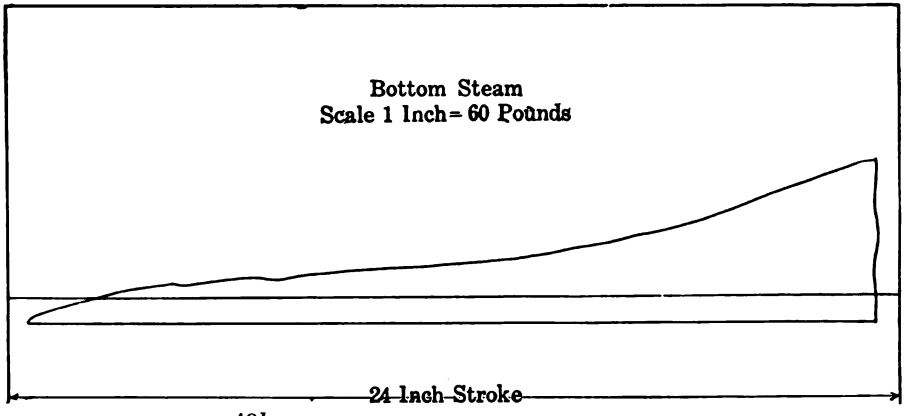

FIG. 40*b*. — BOTTOM STEAM. NORDBERG STAMP.

Table 28 gives a sizing test showing the quality of work done by steam stamps when crushing through $\frac{5}{8}$-inch (0.625 inch) round hole. This test is not altogether satisfactory as the exact size of screen opening is not given, but it is the best test that the author has been able to obtain showing recent practice. The capacity of the stamp in this case was 653 tons per 24 hours.

TABLE 28. — SIZING TEST OF PULP FROM STEAM STAMP.

Through	½	inch	on	5	mesh	44.5	percent.
"	5	mesh	on	10	mesh	11.1	"
"	10	"	"	20	"	7.0	"
"	20	"	"	40	"	6.2	"
"	40	"	"	60	"	4.8	"
"	60	"	"	100	"	3.8	"
"	100	"				22.2	"
Loss						1.2	"
Total						100.0	"

§ 100. CROSS-COMPOUND STAMPS. — Some stamps operating on the above principles have been built cross-compounded. These are not used at present

partly because the clearance under the pistons is large, but mainly because the two cylinders are on separate stamps. There are frequently periods in which one stamp must be out of commission in order to change a shoe, and when this happens both stamps must be stopped, causing great waste of time.

§ 101. TANDEM OR STEEPLE-COMPOUND STAMPS. — The most recent steam stamps are of the steeple-compound type. (See Figs 41*a* and *b*.) The sill, mortar, frame, etc., are the same in this type as for the single-cylinder type. The high-pressure cylinder is placed on the top of the frame and the low-pressure cylinder on the top of high-pressure cylinder. The high-pressure cylinder takes steam on both sides of the piston, while the low-pressure takes steam only on the down stroke. Steam from the high-pressure cylinder is exhausted into a receiver from which it passes to the low-pressure cylinder. The piston clearance in the lower end of the cylinder of a steam stamp is, as a rule, very large, as it must be made to suit a worn-down shoe and die. When new shoes and dies are put in, the clearance is of course increased. In addition to this, the depth of rock on the die adds to the clearance. It is therefore evident that the making of the low-pressure cylinder single-acting, is better policy than trying to run it double-acting, with the consequent large clearance space. The above stamp has therefore a greater efficiency than either a single-acting or cross-compound stamp.

The high-pressure valve gear is the same as for the single-cylinder machine. The low-pressure valves are driven from the first-motion shaft through wrist plates, and the inlet valve is fitted with releases, gear, and dash pots.

Diagrams taken from a stamp of this type are shown in Figs. 42*a*, *b*, and *c*. In the case of the stamp tested, the total striking weight was 7,480 pounds, the area of the shoe was 285.63 square inches, and the weight of the stamp per square inch of area was 27.5 pounds. The steam pressure was 150 pounds, and the stamp was making 103 drops per minute.

§ 102. COMPARATIVE PERFORMANCE OF SINGLE AND COMPOUND CYLINDER STAMPS. — The following test, the results of which are given in Table 29, was made with stamps crushing Kearsage amygdaloid and each test covered a period of 24 working days.

TABLE 29. — COMPARATIVE TEST ON SINGLE AND COMPOUND-CYLINDER STAMPS.

	Single.	Compound.	Difference.	
			Units.	Percent.
Tons rock per ton of coal	62.8	88.3	25.5	40.6
Tons rock per 24 hours	554.5	709.3	154.9	28
Steam pressure, pounds per square inch	118	148		
Steam cylinders, diameter and stroke in inches	20 x 24	15½ x 24 32 x 24		

The tests were made with great care in order to compare the stamps working under exactly similar conditions.

In the latest designs of steam stamps a removable bushing is introduced in the cylinders. This makes a very convenient arrangement as the bushing can be replaced quickly when worn, doing away with the necessity of re-boring the cylinders. This plan is used both in the single and compound-cylinder stamps.

An efficient indicator is absolutely necessary on a stamp in order that its efficiency may be determined and the valves properly adjusted. It is also necessary that the indicator motion be such that it shows the clearance on every

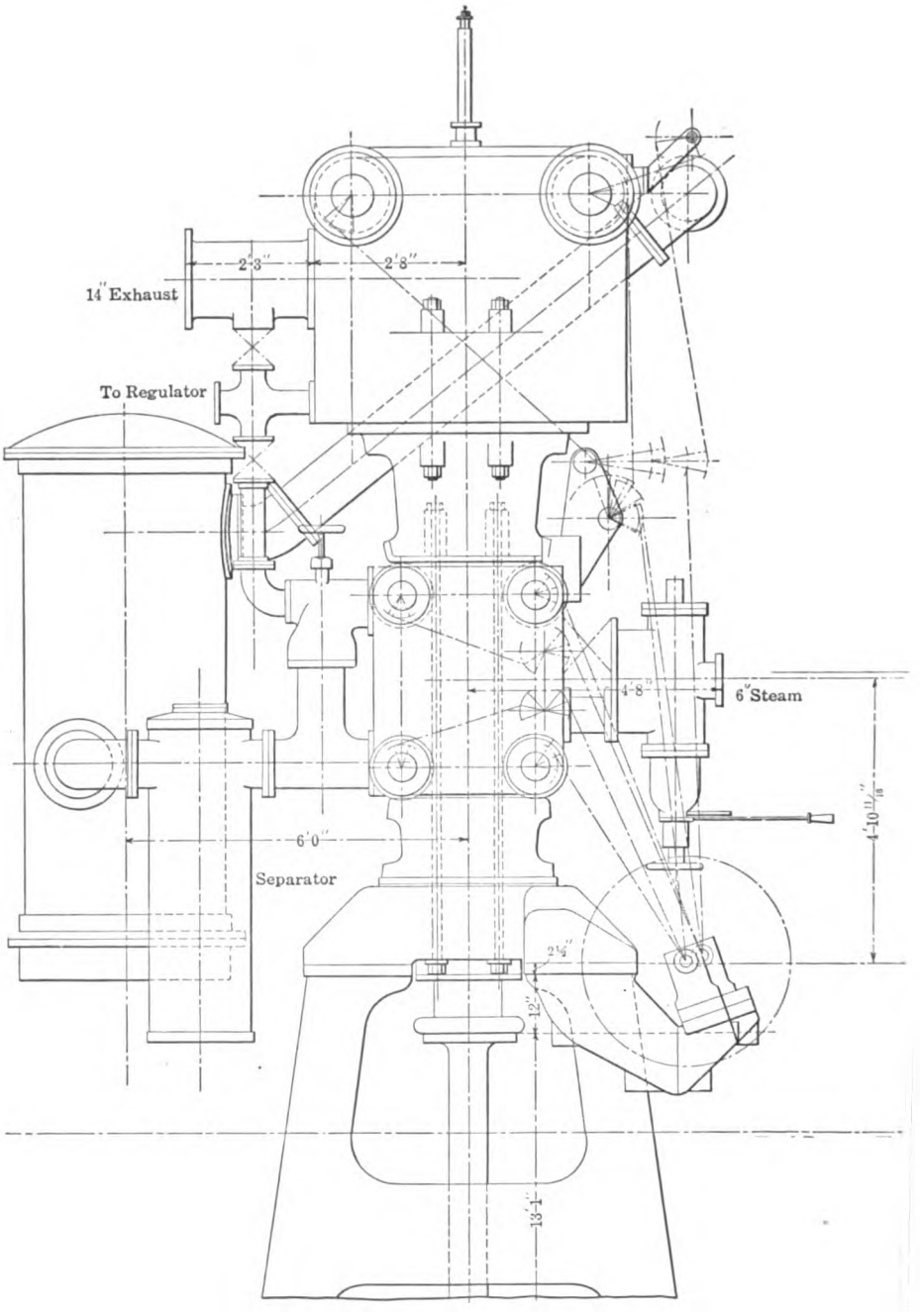

FIG. 41*a*. — NORDBERG STEEPLE-COMPOUND STAMP.

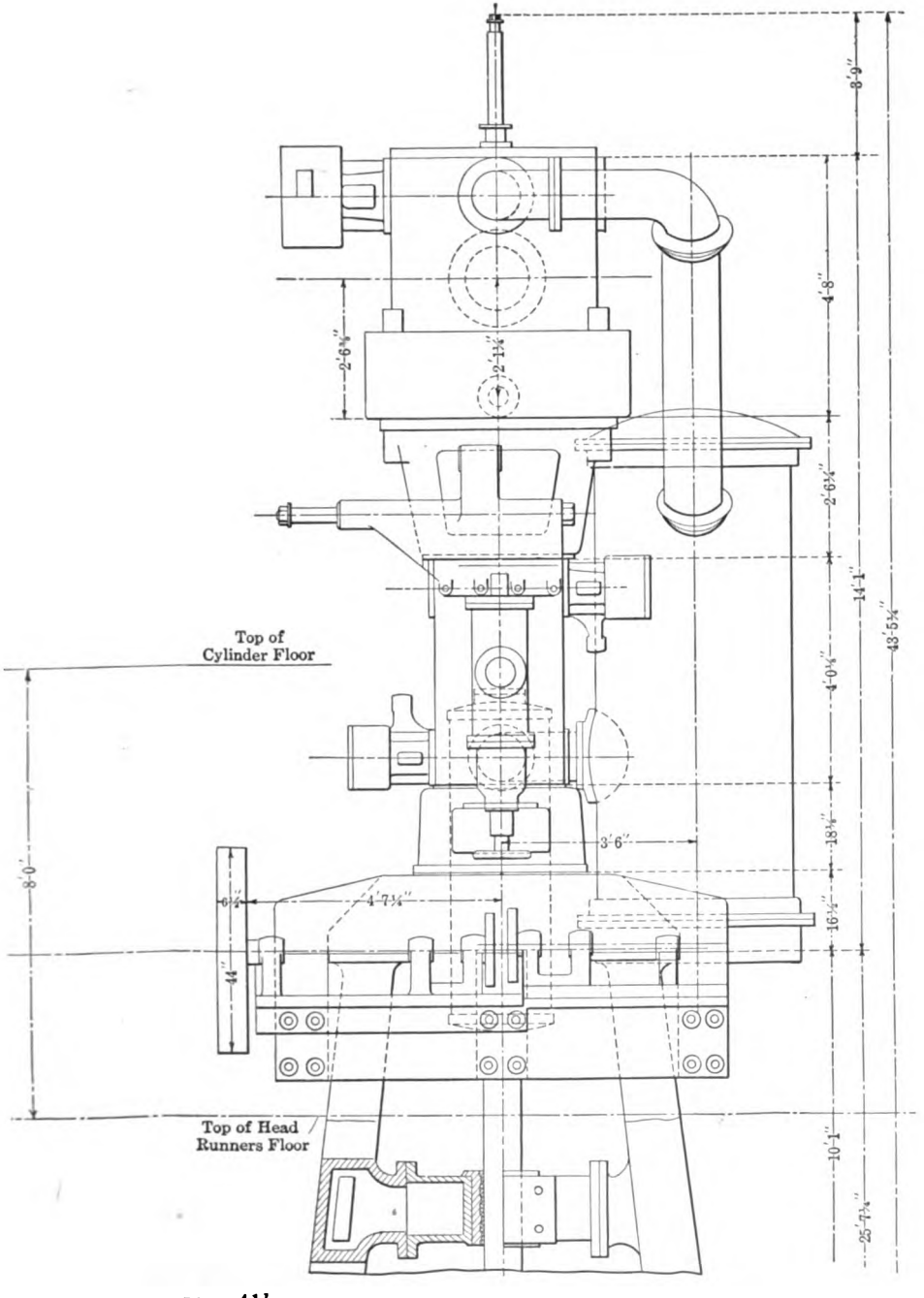

FIG. 41*b*. — NORDBERG STEEPLE–COMPOUND STAMP.

card. For this purpose an indicator is used very much like the original Watt design, which has, instead of the revolving drum, a sliding table operated by a rod positively connected to the stamp shaft. There are stationary marks

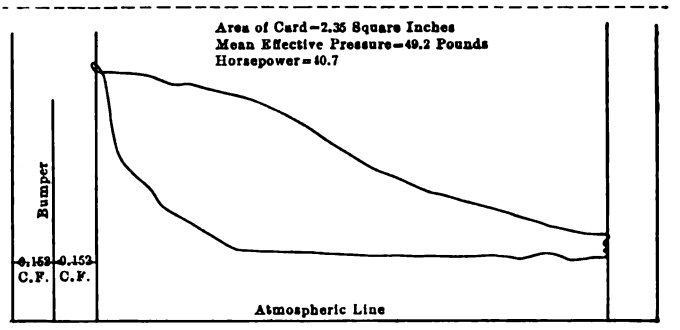

FIG. 42*a*. — HIGH-PRESSURE BLOW CARD.

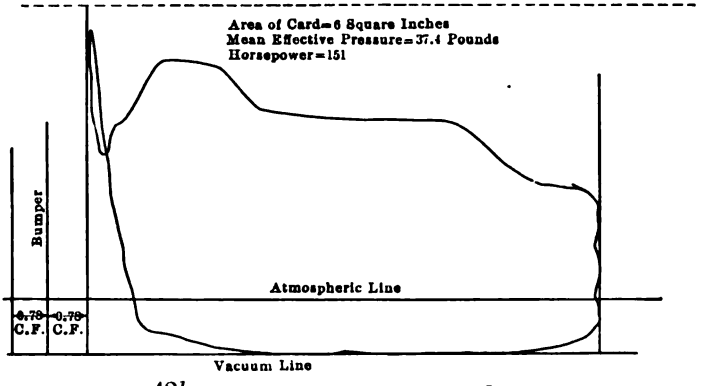

FIG. 42*b*. — HIGH-PRESSURE LIFTING CARD.

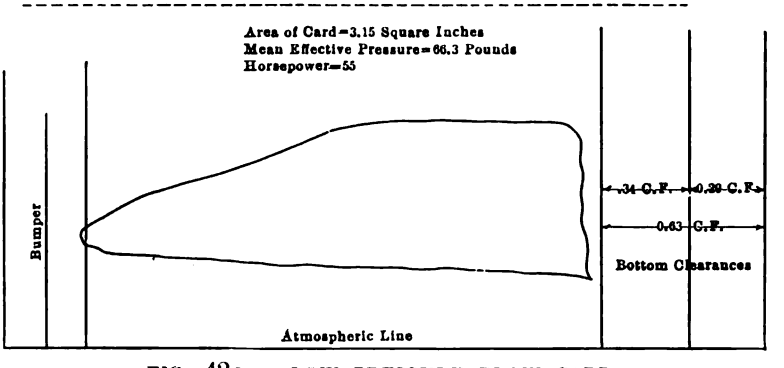

FIG. 42*c*. — LOW-PRESSURE BLOW CARD.

on the guides of this table, the relation of which to marks on the table itself, indicates the clearance in the cylinder, the two sets of marks corresponding when the piston touches the head.

The efficiency of the compound stamps depends very greatly upon the

perfect vacuum that can be maintained on the under side of the low-pressure piston. In this space is maintained, by means of a device known as a regulator, practically the same vacuum as in the condenser. By examining indicator cards from older types of stamps, it is seen that an absolute back pressure, averaging from 5 to 8 pounds, exists, and experiments show that by carrying a better vacuum, a correspondingly lower back pressure is not obtained. This is largely due to the high velocity of the stamp shaft when it goes down, causing correspondingly high speeds in the exhaust ports. If this back pressure could be removed in a single-cylinder stamp there would be a very material increase in the efficiency. On the lower side of the low-pressure piston of the compound stamp, there is no exhaust, and consequently it is easy to maintain therein a vacuum nearly as high as that in the condenser. This, of course, produces a much stronger blow.

CHAPTER V.

GRAVITY STAMPS AND AMALGAMATION.

§ 103. PRINCIPLE OF ACTION. — Gravity stamps are lifted by cams and drop by their own weight. The most highly developed mill of this class is

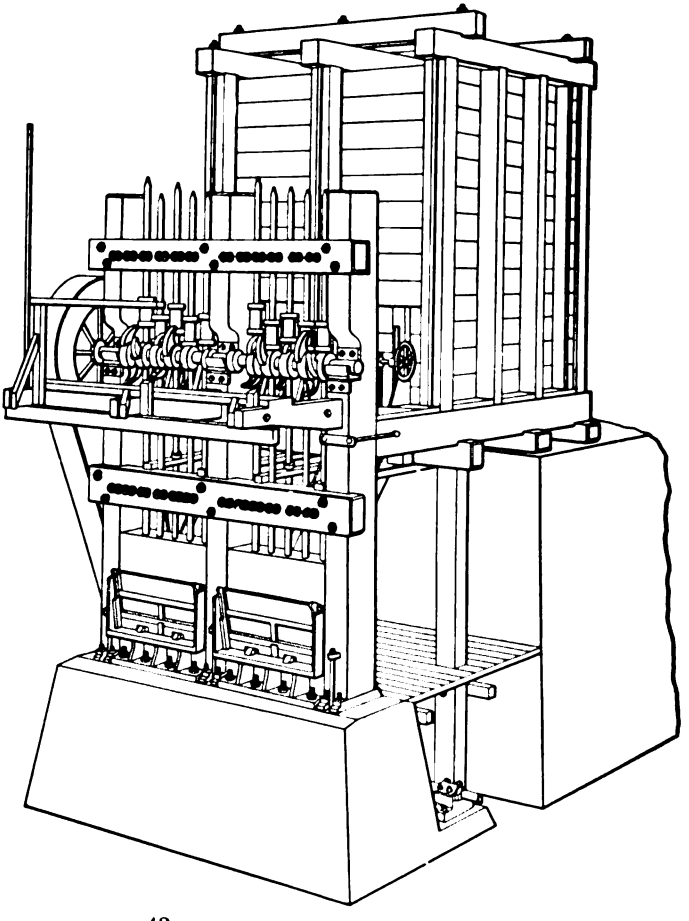

FIG. 43*a*. — MODERN TEN-STAMP BATTERY.

called the California Stamp Mill. (See Figs. 43*a* and *b*.) This stamp mill consists of a mortar standing upon a concrete mortar block. The stamps are lifted by cams keyed to a cam shaft and drop in the mortar. A strong frame

supports the cam shaft and driving gear. A single mortar has from one to six stamps dropping in it. Five is almost universal in this country. One mortar with the accompanying stamps, cams, frames, etc., is called a stamp battery. This machine may be described in detail as follows:

§ 104. FOUNDATION. — The foundation of a battery is of prime importance. If the battery foundation is not good the battery will soon shake itself to pieces. When a wooden block is used, which practice was formerly almost universal, a trench is usually dug in gravel or blasted in rock to receive the mortar block. This trench is usually the length of the mortar block plus two feet at each end, and may be the width plus two feet at each side more or less. This trench is sometimes walled in with masonry. The bottom is generally leveled with a layer of concrete or sand well tamped in. If concrete is used it should not be less than 30 inches thick as otherwise it may crumble and give trouble. Its use saves the more accurate leveling of the rock which is necessary when sand is used. The use of the sand is simply to level up with a thin layer the last irregularities of the rock. On the sand or concrete may be placed two layers of 2-inch plank spiked together.

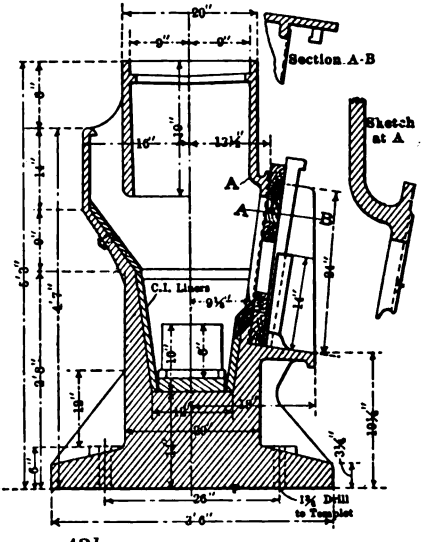

FIG. 43*b*. — MODERN HOMESTAKE-TYPE MORTAR.

These planks also save time in construction by avoiding the necessity of smoothing the rock.

§ 105. THE MORTAR BLOCK. — The mortar block was formerly almost invariably constructed of plank or timber on end. (See Figs. 44*a* and *b*.) These planks, laid together breaking joints and held together by bolts or buckstaves and bolts, rest on the sand tamping, the plank, or the concrete in the foundation. Planks are better than timber because sounder wood can be chosen, their ends can be more easily carved to fit the rock and they are easier to take down. The timber which is used in mortar blocks is exposed to hard usage as to vibrations, stresses, and decay. Great care must be taken, moreover, that the top of the mortar block shall be perfectly flat so as to avoid a concave bearing which might crack the mortar. It is not considered good construction to connect the mortar blocks rigidly to the frame on account of the additional jar produced. For all these reasons in practically all of the more recent installations of any considerable importance concrete mortar blocks have been employed. These are cheaper and much more durable than wood. It has, moreover, been demonstrated that the more solid the foundation, the greater will be the capacity, without causing increased breakage. Where this type of mortar block is used it is carried down to bed rock. One of the earlier mortar blocks of this type is shown in Fig. 45. The increase in capacity due to concrete over wood in this case is said to have been at least ½ ton per stamp per 24 hours. Except for an intervening sheet of pure gum rubber ¼ inch thick, the mortar rested directly on the concrete. The stamps weighed 1,065 pounds and dropped 4 inches 110 times per minute. In one of the most recent installations the holding down bolts instead of being cast in the concrete, as has been customary, are carried in two-inch iron pipes cast in the mortar block in

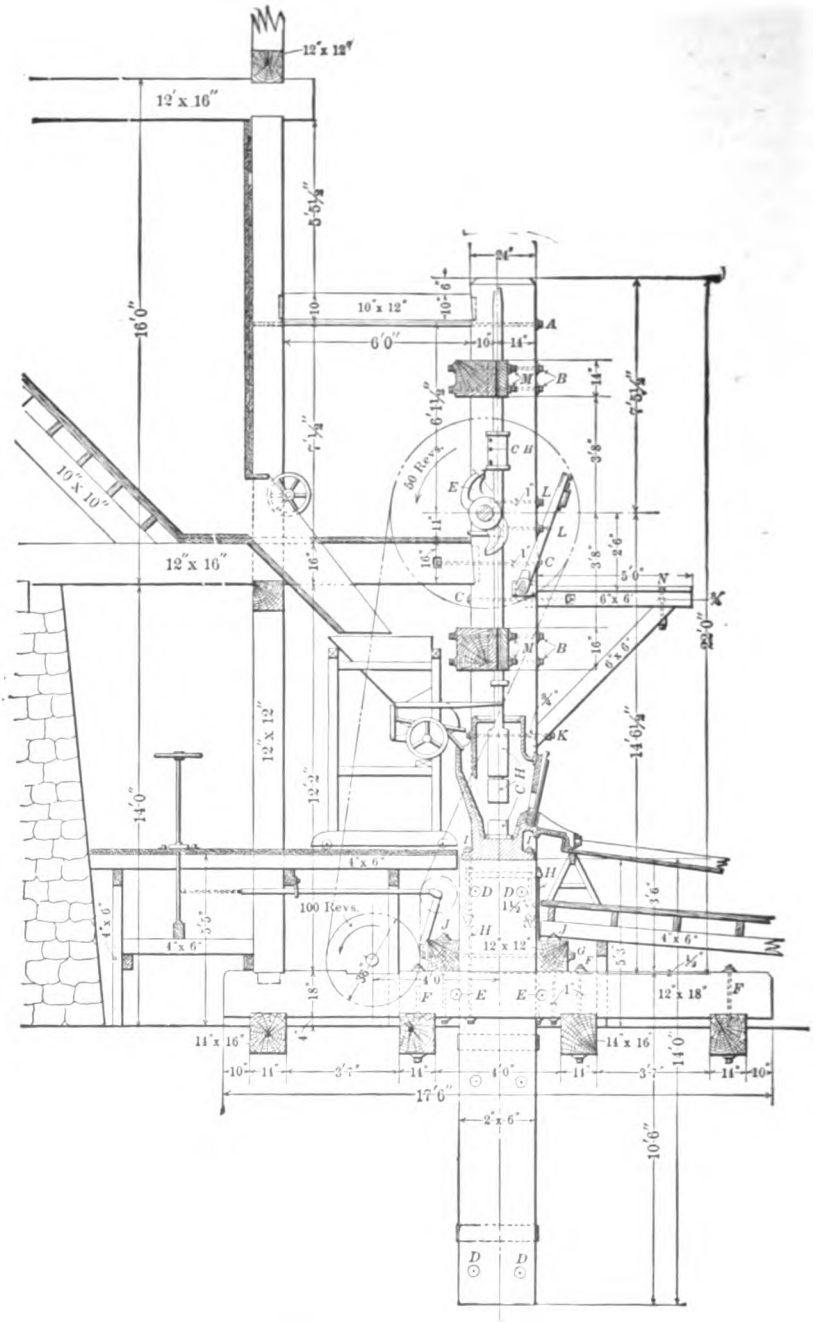

FIG. 44*a*. — SIDE ELEVATION OF STAMP MILL.

reinforced webs at the sides. The proportions of concrete, sand, and crushed rock are as 1:3.14:3.14.

§ 106. PLACING THE MORTAR. — Upon the mortar block three thicknesses of common house blankets coated with tar upon both sides are placed, or blankets

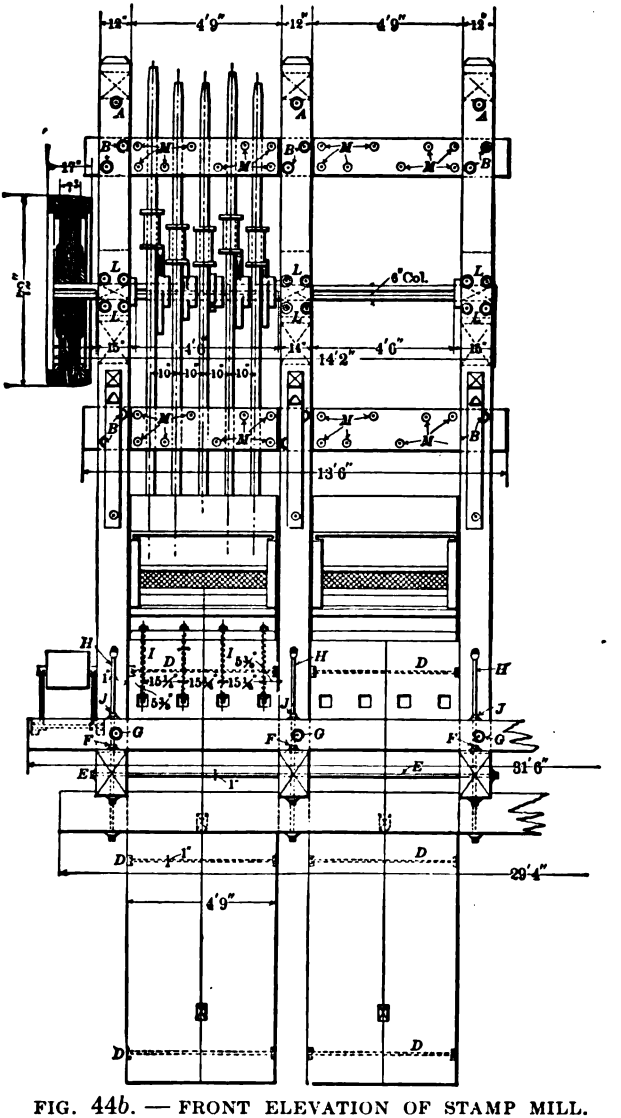

FIG. 44*b*. — FRONT ELEVATION OF STAMP MILL.

may be used without tar. Sheet rubber ¼ to ⅜ inch thick may also be used. This packing gives an even bearing, reduces the jar to a minimum, and prevents dirt from working its way under the mortar and destroying its level. Vertical bolts 1⅝ to 1¼ inches in diameter and 3 to 4 feet long, are set in the mortar block to secure the mortar in place. These may have nuts and washers, or keys and washers below, for which recesses have been cut in the side of the

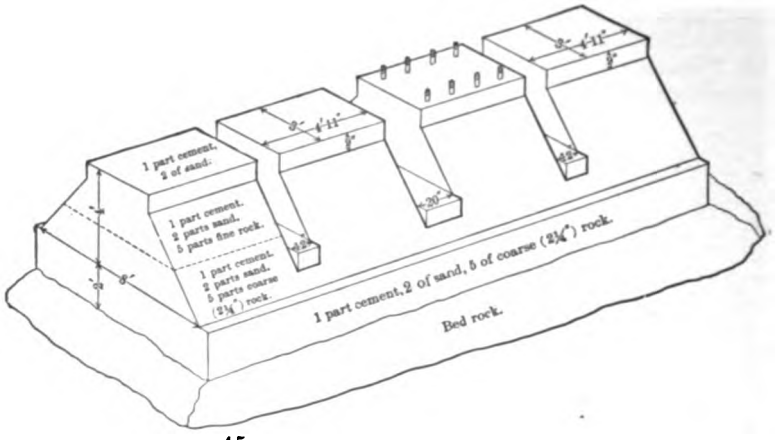
1 part cement, 2 of sand.
1 part cement, 2 parts sand, 5 parts fine rock.
1 part cement, 2 parts sand, 5 parts coarse (2½") rock.
1 part cement, 2 of sand, 5 of coarse (2½") rock.
Bed rock.

FIG. 45. — CONCRETE MORTAR BLOCK.

mortar block (see Figs. 44*a* and *b*), or they may be eye bolts which have been let into the side of the mortar block, and which are held by horizontal 2-inch bolts passing through the eyes and through the mortar block. With the latter the mortar is more securely and evenly fastened to the block and the block is more easily replaced.

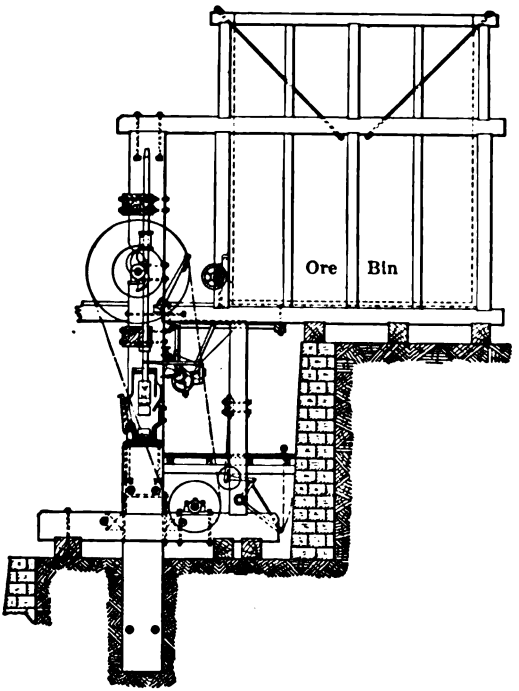

FIG. 46. — BACK KNEE OR SINGLE POST FRAME WITH CAMS IN FRONT.

§ 107. STAMP FRAMES. — These structures are made to support the cam shaft and also to guide the stamps. They are made of wood, cast iron, steel, or wrought iron. There are a great number of forms of battery frames only two of which need to be described. The battery frame shown in Fig. 46 is of the form known as back knee or single-post frame and is connected with the ore bin. This form of frame or some modification of it is in quite general use for heavy stamps. It possesses the distinct advantage of easy access to the front of the mortar and an unobstructed view of all the plates in the mill. The only disadvantage is that the driving shaft has to rest on the sills which is a rather inconvenient place. The frame is made up of the three mudsills which rest on the ground and are parallel to the cam shaft. At right angles to these are the cross sills to which they are notched and bolted and on which rest the upright posts. When as in Fig. 43*a*, a solid concrete mortar block is used, the posts rest directly on the solid concrete mortar block to which they are securely bolted. Where a wooden mortar

block is used buckstaves are placed over the cross sills on each side of the mortar block (see Fig. 44*a*), and are bolted horizontally through the posts from front to rear. They may rest on the cross sills and be bolted vertically to them. From 12 to 16 feet above the top of the cross sill the posts are notched in nearly to the center to receive the cam-shaft boxes. These notches may be cut either in the front or the rear sides of the posts, according as front cams or rear cams are used.

Two guide timbers (see Figs. 44*a* and *b*), which are about 14 inches square, are notched and bolted to the posts upon the same side as the cam-shaft boxes, and are in the clear, about 3 feet distant above and below from the center of the cam shaft. They extend the length of two or four batteries, according to the frame used. These guide timbers must be far enough apart to allow for the sweep of the cam, plus the height of the tappet, with sufficient clearance. On the inner side of the guide timbers are the guides. The ordinary guide (see Fig. 47), is of two planks, each 3 to 8 inches thick and 12 to 19 inches wide, yielding a bearing of that length. Half the bearing for the stamp stem is cut from each plank with the grain horizontal. The guides are held to the guide timbers by bolts. At the start they are shimmed apart and as they wear the shims are thinned until they are taken out altogether, and as they wear further, the inner surfaces are planed off to restore the diameter of the holes. During this period they are lined up by putting in shims between the rear guide and the guide timbers. The woods are preferred in this order: Oak, hickory, heart of maple, and pine. This form of guides is in use in by far the majority of mills. The guides are sparingly lubricated and that with solid grease. Fluid animal and vegetable oils are avoided as these are liable to interfere with amalgamation by fouling the mercury. Platforms are usually provided to stand upon while lubricating the guides and cams and tending the tappets and stamps generally.

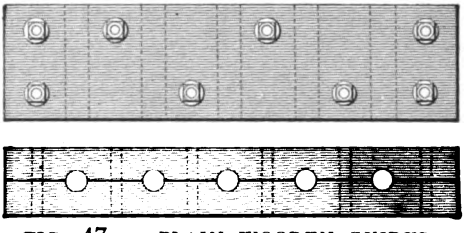

FIG. 47. — PLAIN WOODEN GUIDES.

Fig. 48 shows a very excellent form of steel frame of cantilever pattern. This frame is a part of the ore bin and from it gets its rigidity. Two concrete walls, 30 inches thick, are the foundations for a series of 24-inch I-beams having 5.5-foot centers. These beams extend out so as to take the bearings for the cam shaft. The skeleton of the bin is of 10-inch I-beams, and the 10-inch cap channels are a support for a hanging strap which catches the base beams near the cam-shaft bearing, giving that bearing an extra support. This construction leaves a clear passage around the 2 five-stamp batteries which are of double discharge and low type.

§ 108. MORTARS are boxes of cast iron or wood and cast iron, in which the operation of stamping takes place. They have the following functions: (1) to receive the ore from the feeder; (2) to place it under the stamp; (3) to give the stamps freedom to strike their blows; (4) to discharge the water and pulverized ore or pulp, and often to amalgamate gold. Fig. 43*b* shows a mortar of the type most used to-day. A mortar should be narrow, as the object is to get the ore out of the battery as fast as it is crushed. The back should be curved from the throat or so shaped as to throw the ore directly upon the center of the die. In general, we may say, that a narrow, somewhat deep mortar is the best combination to obtain rapid stamping, and good battery amalgamation.

The mortar proper is made of cast iron. The best material to withstand the continual vibration is a tough, uniformly fine-grained gray iron. The bottom

should be planed to give it a true bearing on the mortar block. The weight of the mortar should be proportional to the weight of the stamp. For stamps weighing from 750 to 1,000 pounds the mortar is usually made from 6 to 6.75 times as heavy as the stamps. The heavier the stamp is the heavier the mortar must be made to withstand the constant vibration to which it is subjected. The space behind or in front of the shoe must be larger than the maximum size of ore fed, to prevent the stamp from becoming wedged against the side. In the case of ores which requires extremely fine pulverization, as for example, the Gilpin County ores of Colorado, the slow stamping, deep, wide mortar still finds favor.

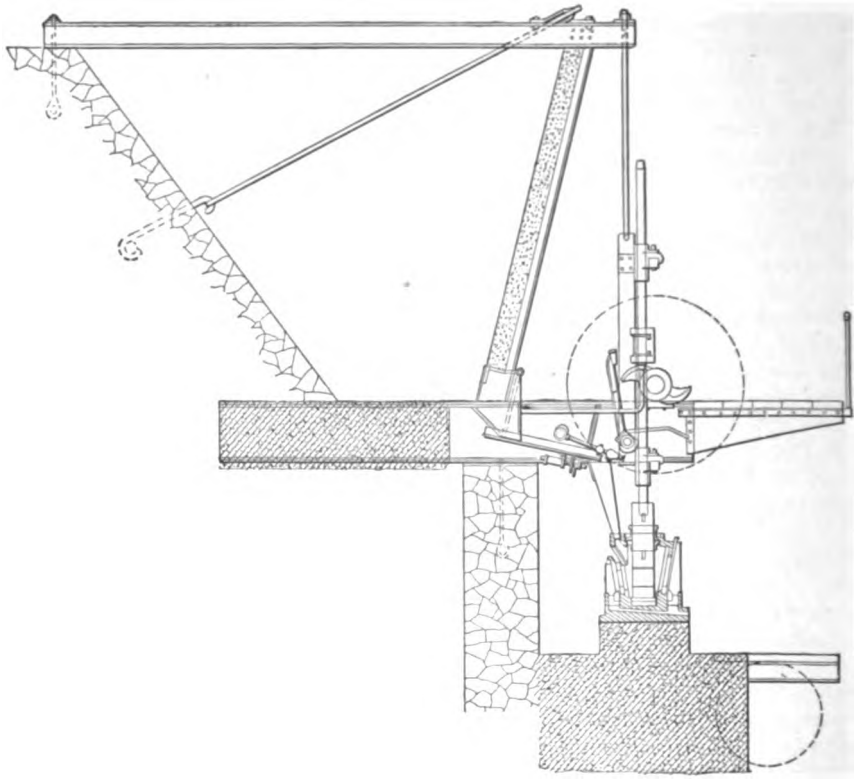

FIG. 48. — STAMP BATTERY WITH CANTILEVER FRAME.

§ 109. MORTAR LININGS. — These are replaceable parts which save the mortar from wearing out. They are generally made of chilled iron and may be put on one or all sides of the mortar. If the mill is far from a foundry there should be five lining plates, four around the bottom and one in the mouth. The corners should be mitered with 45° angle to hold them in place.

§ 110. MOUTH OR FEED OPENINGS. — In the mortar shown in Fig. 43b, the mouth begins 8 inches below the top of the mortar and is 4½ inches wide and 14 inches deep before entering the mortar. It is provided with a chilled iron wearing plate and is so pitched as to project the ore directly upon the center of the die.

§ 111. MORTAR COVERS. — Two planks 2 to 3 inches thick, with half the hole for each stamp stem cut from each plank, are used to cover in the open top

of the mortar. Holes are also cut for feeding water. The planks rest on a ledge around the inside of the mortar top.

§ 112. SCREEN OPENINGS. — These are provided in front or both back and front of the mortar. The former is called single issue (see Fig. 43*b*), and is commonly used where battery amalgamation is practiced. The latter (see Fig. 48), is called double issue, and is used chiefly for dry crushing or in wet crushing where maximum crushing capacity or minimum sliming of ore is the object sought. The front face of all four sides of this opening are planed to give the screen a flat bearing and a tight joint. The majority of the mills use single issue mortars.

§ 113. THE SCREEN is mounted in a wooden frame. Screens are made either of punched plate or wire cloth. The holes in plate are either round or slotted, while those in cloth are square or nearly so. The efficiency of stamp screens depends upon (1) the size of hole, (2) the percentage of opening, that is, the ratio of open space to the net screen area.

§ 114. PLATE SCREENS. — The method of punching is not without influence. Round holes used for coarse stamping, namely 0.04 inch (1 mm.) in diameter and above, and for medium stamping, about 0.03 inch (0.75 mm.) in diameter, are always clear punched, likewise slots for similar work (see Fig. 49); but for fine stamping 0.02 inch (0.5 mm.) in diameter and less, the latter are generally buhr punched (see Fig. 50), because a thicker plate can be used. A clear punched hole is made by a tool which has a square, sharp edge and which cuts out a wad of exactly the size and shape of the hole. The buhr-punched hole is made by a thicker tool which makes an indentation in the plate when laying on a socket in the die, just deep enough to tear the metal asunder.

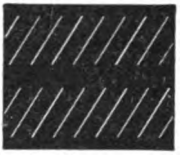

FIG. 49. — CLEAR PUNCHED HOLES.

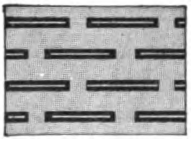

FIG. 50. — BUHR PUNCHED HOLES.

The smallest practicable clear-punched hole would seem to be about 0.014 inch (0.35 mm.) in width. The limit is governed by the fact that the punching tool is more liable to break, thereby increasing the cost of the screen, when it is attempted to punch a hole of much less diameter than the thickness of the plate. Holes less than 0.014 inch wide require plate so thin that it has not sufficient strength. The size of holes in buhr-punched screens is limited by the ability to regulate the space torn.

§ 115. *Arrangement of Holes.* — Slots are punched either vertical, diagonal, or horizontal, and either in line or staggered. When the slots are staggered, the strains due to punching are distributed. For discharging the particles with diagonal slots or horizontal slots, staggered, every grain which slides down the screen plate passes over the slots; with the vertical slots a limited number of grains only will be in line with the slots. This apparent advantage of the former two classes of screen may be partly or wholly neutralized by the wash of the stamps.

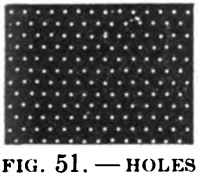

FIG. 51. — HOLES ARRANGED IN 60° ROWS.

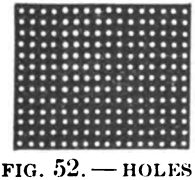

FIG. 52. — HOLES ARRANGED IN 90° ROWS.

Round holes are arranged in rows making either 60° or 90° with each other. (See Figs. 51 and 52.) The former gives 1.154 times as much percentage of opening as the latter when the diameters of the holes and the spaces between them are the same. In order to strengthen battery screens, A. D. Foote, at Grass Valley, California, leaves portions of the

screen plate blank. (See Fig. 53.) He uses a round-punched hole $\frac{3}{8}$ inch in diameter, $\frac{3}{4}$ inch apart on centers. Lines $\frac{1}{8}$ inch wide, one inch apart intersecting at right angles are left blank. This arrangement has been found very efficient in strengthening the screen while reducing the screening area but slightly. The screen shown in the cut has seen over 25 days continuous usage, whereas ordinary punched plate has been found, under the same conditions, to last but 7 or 8 days.

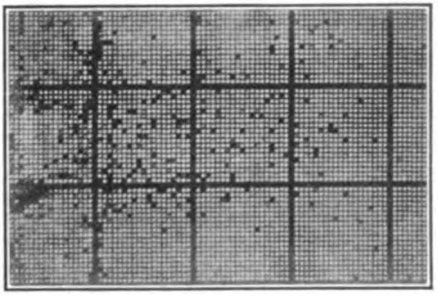

FIG. 53. — FOOTE BATTERY SCREEN.

§ 116. *Comparison of Round Holes with Slotted Holes.* — For fine stamping the percentage of opening is about the same in either case; for medium stamping the round hole has much larger percentage of opening; but for coarse stamping, that is, larger than 0.04 inch (1 mm.), it is probable that the slot will be at least as favorable, and may be more so than the round hole. For both shapes the percentage of opening decreases toward the fine end. For very fine stamping, where buhr slot is used, the percentage of opening is very low.

Slots should be less inclined to blind up than round holes, for in the former a particle will usually have but two points of bearing, while in the latter it will have three.

Round holes strain the plate more in the punching than the slotted, owing to the method of punching. For this reason it follows that for a given width of hole, while round holes may have a greater percentage of opening than slotted holes when the plate is thin, on the other hand, when the plate is thick. slotted holes which do not have to increase the spaces, will have a much greater percentage of opening than round holes, which do require an increased space between the holes. For example, to give an extreme case, Fraser & Chalmers state that to punch round holes 0.07878 inch (2 mm.) in No. 12 steel (0.109 inch thick), the spaces between the holes would have to be quite large, say $\frac{1}{2}$ inch.

Slots will pass larger flat or elongated particles than round holes, in fact a more uneven product. This may make a slotted screen advantageous when stamping graphite, mica, or any laminated mineral.

§ 117. PLACING THE SCREEN. — All holes, whether clear punched or buhr punched, have more or less of a buhr, and this buhr is always placed toward the stamps to prevent blinding up the hole. This is true because the hole is slightly wedge-shaped and a particle which can enter the small end will free itself at the large, while the movement in the opposite direction might blind the holes.

§ 118. CLOTH SCREENS. — These are woven of wire. They are single crimp or double crimp. In double crimp cloth the woof is crimped nearly as much as the warp, in single crimp the woof is nearly straight. Double crimping prevents spreading of the wires.

TABLE 30. — TYLER DOUBLE-CRIMPED OR IRON BATTERY CLOTH.

Abbreviations.—W & M = Washburn & Moen.

Meshes per Linear Inch.	Diameter of Wire.	Diameter of Wire.	Diameter of Hole.	Diameter of Hole.	Ratio of Wire to Hole.	Percentage of Opening.
	W&M Gauge No.	Inches.	Inches.	Mm.		%
12	19	0.041	0.0423	1.07	0.969	25.80
14	20	0.035	0.0364	0.925	0.961	26.01
16	22	0.028	0.0345	0.876	0.812	30.47
18	23	0.025	0.0306	0.777	0.818	30.24
20	24	0.023	0.0270	0.686	0.852	29.16
22	25	0.020	0.0255	0.648	0.786	31.35
24	26	0.018	0.0237	0.602	0.760	32.27
26	27	0.017	0.0215	0.546	0.792	31.13
28	27	0.017	0.0187	0.475	0.908	27.47
30	28	0.016	0.0173	0.439	0.923	27.03
35	30	0.014	0.0146	0.371	0.961	26.00
40	31	0.0135	0.0115	0.292	1.174	21.15
45	33	0.011	0.0112	0.284	0.980	25.49
50	34	0.010	0.0100	0.254	1.000	25.00
55	35	0.0095	0.0087	0.221	1.045	22.79
60	35	0.0095	0.0072	0.183	1.327	18.45
70	37	0.0085	0.0058	0.147	1.468	16.42
80	40	0.007	0.0055	0.140	1.273	19.36

TABLE 31. — TYLER DOUBLE-CRIMPED BRASS BATTERY CLOTH.

Abbreviations.—O. E. = Old English.

Meshes per Linear Inch.	Diameter of Wire.	Diameter of Wire.	Diameter of Hole.	Diameter of Hole.	Ratio of Wire to Hole.	Percentage of Opening.
	O. E. Gauge No.	Inches.	Inches.	Mm.		%
12	19	0.040	0.0433	1.10	0.923	27.03
14	20	0.035	0.0364	0.925	0.961	26.01
16	21	0.0315	0.0310	0.787	1.016	24.60
18	22	0.0295	0.0261	0.663	1.132	21.99
20	23	0.027	0.0230	0.584	1.174	21.16
22	24	0.025	0.0205	0.521	1.222	20.24
24	25	0.023	0.0187	0.475	1.232	20.08
30	27	0.01875	0.0146	0.371	1.286	19.13
35	29	0.0155	0.0131	0.333	1.186	20.93
40	30	0.01375	0.0113	0.287	1.222	20.24
50	32	0.01125	0.0088	0.224	1.286	19.14
60	35	0.009	0.0077	0.196	1.175	21.12
70	37	0.0065	0.0078	0.198	0.834	29.73
80	38	0.00575	0.0068	0.173	0.852	29.16

Tables 30 and 31 give the sizes of steel and brass cloth offered by one of the standard makers, and show that the ratio of the thickness of the wire to the diameter of the hole is less where the steel or iron is used than with brass, and consequently the steel or iron screens have a little higher percentage of opening.

§ 119. COMPARISON OF CLOTH AND PUNCHED PLATE SCREENS. — The most noteworthy point from the mills is that the wire-cloth screens have a larger percentage of opening than the plate screens. The percentage of opening in fine wire screens is about as large as in coarse, while in fine plate screens it is greatly reduced. In using the former, one saves percentage of opening and sacrifices strength. In the latter, vice versa.

Cloth screens have holes that are approximately square and therefore discharge slightly larger grains than circular holes of the same diameter. The plate screens avoid the tendency to spread seen in wire cloth. Wire screens, owing to their larger percentage of opening, cause less sliming of the ore than the plate screens, because the particles can leave the battery earlier. Again, wire screens are shorter lived and there is, therefore, less discrepancy between the diameters of the holes in the new and the discarded screens and the pulp will be more uniform than with plate screens.

§ 120. DESIGNATION OF THE SIZES OF HOLES IN STAMP SCREENS. — For

plate screens there are four methods, as follows: (*a*) By giving the actual size of the holes in decimals of an inch or in millimeters. This is to be preferred, because it tells the mill men the size of grain the screen will pass.

(*b*) By numbering the screens according to the diameters of sewing needles to which the holes purport to correspond. This is indefinite, because the needle sizes of one firm differ from those of another. The majority of manufacturers, however, have agreed upon the sizes shown in Table 32. In the case of a slotted screen the width of the hole is the dimension which designates the size of the hole.

TABLE 32. — SIZES OF NEEDLES FOR SCREENS.

Needle No.	Thickness of Plate. *	Diameter of Hole.	Diameter of Hole.	Needle No.	Thickness of Plate.	Diameter of Hole.	Diameter of Hole.
	Inches.	Inches.	Mm.		Inches.	Inches.	Mm.
1	0.0243	0.058	1.47	7	0.0191	0.024	0.61
2	0.0243	0.049	1.25	8	0.0179	0.022	0.56
3	0.0243	0.042	1.07	9	0.01594	0.020	0.51
4	0.0243	0.035	0.89	10	0.01419	0.018	0.46
5	0.0219	0.029	0.74	11	0.01264	0.0165	0.42
6	0.0201	0.027	0.69	12	0.01264	0.015	0.38

* The thickness of the plate is taken from Fraser & Chalmer's catalogue.

(*c*) By the meshes of sieves which purport to correspond to the sizes of the holes. This method is misleading and should be abandoned, since sieves with the same mesh but with different diameters of wire have different diameters of hole. (See (*a*) under designation of cloth screens below.) This method is all the more confusing, since some manufacturers use the term mesh to express the fractional size of the hole. Thus 40-mesh means a hole $\frac{1}{40}$ inch in diameter.

(*d*) By various trade numbers. For example, screens made in Central City, Colo., are labeled 0, 1, 1½, etc., the size 1½ being about equivalent to 50-mesh brass screen. In the same way tin screens are sold under three numbers, No. 0, No. 1, No. 2. Samples of these measured by the author gave the diameter of the holes as 0.026 inch (0.658 mm.), 0.032 inch (0.814 mm.), and 0.040 inch (1.018 mm.) respectively, and there were 20, 18, and 15 holes per linear inch laid out in 90° rows. The plate was 0.016 inch thick in all three cases.

The designation of sizes for cloth screens is made in three ways:

(*a*) By the number of holes to the linear inch. This, if the size of wire is given in decimals of an inch, defines the actual size of hole, otherwise it is misleading. There is another objection that in many cases an actual count of the holes per linear inch will give a different number from that designated.

(*b*) The method commonly adopted abroad is to designate the number of holes in a square centimeter. This is more unsatisfactory than the use of the number of meshes to the linear centimeter; first, because one must extract the square root in order to get the number of holes per linear centimeter; secondly, because after obtaining the number of holes to a linear centimeter, one does not then know the diameter of the hole.

(*c*) In South Africa the number of holes per square inch is given. This is open to the same objections as (*b*).

In conclusion, there seem to be three facts that are all important for the ore dresser to know in deciding upon the kind of screen to use: (*a*) The exact diameter of the hole, controlling the size of his pulp; (*b*) the percentage of opening, showing the freedom of discharge and the strength of the screen; (*c*) the thickness of the plate or wire indicating the strength of the screen.

§ 121. GAUGES. — For wire cloth screen the Washburn and Moen gauge is standard for iron and steel wire and the old English for brass and copper. For steel plate the decimal micrometer gauge is usually used.

§ 122. MATERIAL AND COST OF SCREENS. — Plate screens are made of Russia sheet iron, steel plate, burned tin plate, and unburned tin plate. Besides these, tin bronze, phosphor bronze, aluminum bronze (95% copper and 5% aluminum), and copper, have all been tried. Cloth screens are made of steel wire or brass wire. In addition to these phosphor bronze and aluminum bronze wire have been tried.

(*a*) Iron and steel plate or cloth have advantage of strength and cheapness of first cost, but they are liable to be attacked by acid water.

A very effective way to neutralize the acid would be to run lime water from a tank which was charged with a little fresh slaked lime once or twice a day, into the flume which brings water to the mill, at a point far enough back to thoroughly mix the two liquids. Surface ores often give more trouble from acid water than those that are undecomposed.

(*b*) Tin plate screens rank as low first cost screens. The iron used for making tin plate is of a very high grade. They seem to be preferred over the ordinary untinned or "black" plate which is of equally good quality and would save the cost of tinning. The reason of this may be that the tin acts as a rust preventative until the screen is to be used. It is common to burn the tin coating in a forge, mainly to oxide, to prevent amalgamation of its surface. Some mill men consider this difficulty insignificant, and do not burn the tin.

(*c*) Brass cloth has moderate first cost and resists action of acids, but it has not the strength of iron and steel and, therefore, must be made with larger wire. It is said that brass wire screens have less tendency to spread than steel.

Copper plate $\frac{1}{8}$ inch thick is used in one Australian mill. It has long life.

(*d*) Tin bronze, phosphor bronze, and aluminum bronze plate and cloth have all been tried. They have long life but very high first cost.

The cost of mill screens varies widely. It is sometimes as low as 0.2 cents per ton and sometimes as high as 6.8 cents a ton. The average seems to be about 0.35 cents per ton.

§ 123. CHOICE OF SCREENS. — In regard to choice of screens, each mill man must study his own problem for himself. In general, he will consider four things: (*a*) High capacity in tonnage; (*b*) high percentage of extraction of free gold on amalgamated plates; (*c*) high percentage of extraction of sulphurets on vanner; (*d*) low cost of running.

The slope at which the screens are set varies from vertical to 20° from the vertical; 10° is by far the most common. The vertical screen has hydraulic pressure alone acting to discharge the particles of crushed ore, while a sloping screen adds the force of gravity which increases with the slope. A sloping screen tends to retard the falling grains, thereby hastening discharge. The greater the slope, however, the greater will be the tendency to blind the screen.

§ 124. SCREEN FRAMES. — They are made of wood, rarely of iron. The wood, from $1\frac{1}{4}$ to 2 inches square, is framed and pinned together at the corners. They may be shod with iron plate $\frac{3}{8}$ inch thick at the three or four parts where the keys bear. The frame is often divided by vertical bars $\frac{3}{4}$ to $2\frac{1}{2}$ inches thick, into panels which range from 2 to 8 in number. These support the screen but lessen the area of discharge, and should be avoided wherever possible.

It is customary to leave a space above the screen frame for the removal of chips, rope, grass, etc. This is closed with a board which comes to the frame, or a canvas curtain which laps inside. The chips collected in this way should be burned and the gold extracted from the ashes. By burning all the waste wood from around the stamp mill and grinding the ashes in the clean-up barrel, a considerable amount of lost amalgam is frequently recovered.

§ 125. SPLASH BOARD. — A canvas shield is often suspended in front of the screen to stop the spatter caused by the stamping. A splash board of wood is

frequently used. This should be provided with an amalgamating plate 12 inches wide and sufficient to fill the space between the shoulders of the mortar. It should stand in front of the screen at an angle of not less than 45° and better 50° from the horizontal. The bottom of the plate should be at least an inch below the bottom of the screen and not more than ¾ of an inch away from the same. The use of a splash board with its amalgamating plate is absolutely essential to the saving of fine gold. Fine gold will adhere to an amalgamated surface if brought into actual contact with it, and this the splash board does in two ways. First, a part of the pulp is thrown against the plate, aiding adhesion by the force of the impact, and second, the pulp and water run down over the splash plate and drip off its lower edge, forming eddies in which the other half of the pulp precipitates its fine amalgam.

§ 126. CHUCK BLOCK. — The chuck block (see Fig. 43*b*) serves to regulate the height of discharge of the stamps. It is commonly made of two pieces of plank and is placed under the screen frame, and extending within the mortar, serves as a support for a small amalgamating plate called the chuck plate. The chuck block is generally made in two or three heights, interchangeable. As the die wears down a lower chuck block is inserted and the height of discharge is thus maintained. The chuck block should be entirely separate from the screen frame and the chuck plate should touch the bottom of the screen itself at as slight an angle as possible. The chuck block must not extend within the mortar more than is shown in Fig. 43*b*.

§ 127. LIP APRON. — This is a cast-iron extension of the lip which may be flanged, faced, and bolted to the mortar, or may be cast directly on the mortar. It conveys the pulp from the screen to the amalgamated plates below. The ordinary lip is about 6 inches wide while the lip apron may extend it to a total of 20 inches and at the outer end it may be supplied with a distributing box the full width of the mortar, with holes evenly lined and spaced. It serves for distributing pulp evenly to the plates that are to follow, and also for a holder for the battery cleanings at the clean-up. The usual practice in this country is to dispense with the wide lip apron and distributor.

§ 128. COLLARS AND BEARINGS. — Two collars (see Fig. 44*b*), attached by set screws are used to guide the shafts inside the end bearings.

Three bearings for a 10-cam shaft are used. (See Fig. 43*a*.) In dry crushing mills these are generally not babbitted. In wet crushing mills the author found only three out of thirteen not babbitted.

The only lubricant required is an occasional drop of light machine oil. This is preferred to babbitted boxes because: (1) there is no babbitt to crack and fall into the mortar and make sludge of the amalgam; (2) the alignment of the shaft is more constant, the wear is more even and there is no delay from babbitting boxes every 4 to 6 months; (3) steel running on cast iron requires much less lubrication than iron on babbitt, making less oil to be guarded against and less oil for the mill.

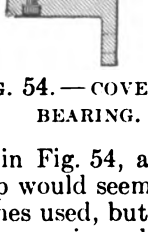

FIG. 54. — COVERED BEARING.

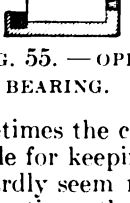

FIG. 55. — OPEN BEARING.

Boxes of soft graphitic iron in connection with a mild steel-cam shaft have been found to give good results.

These boxes are sometimes covered, as in Fig. 54, and sometimes the cap is omitted, as in Fig. 55. The use of the cap would seem desirable for keeping out the dust. Diagonal boxes are sometimes used, but they hardly seem necessary as the vertical component of the pressure is probably four times the horizontal, even where a horizontal driving

belt is used. The bearings need oil grooves and drip pans to prevent oil from getting to the plates.

§ 129. CAM SHAFT. — (See Figs. 56*a* and *b*.) It is generally long enough for two batteries with the overhang for one pulley. The reason for this lies

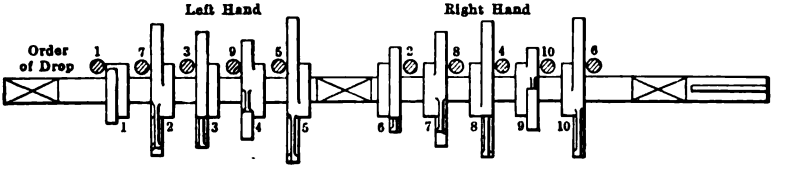

FIG. 56*a*. — CAMS AND CAM-SHAFT FOR TEN-STAMP BATTERY.

in the fact that a break in any battery causes a stop of ten stamps at most, and of five stamps only as soon as the stamps of the disabled battery can be hung up. The batteries are usually driven by pairs, because driving single batteries multiplies expense of belts and pulleys too much.

The cam shaft is of wrought iron or steel turned true, having a continuous longitudinal slot or key seat for each battery a little longer than the space to be occupied by the cams. The cam shaft is so heavily loaded both from the weights of the stamps and from the blows which the cams strike upon the tappets, that it must be made very strong. The diameters obtained by the author range from 4½ inches for light stamps to 6 inches for heavy stamps. The life of mild steel cam shafts at the Homestake mill is 5 years for diameters from 4½ inches to 4¾ inches, and 10 years for diameters of 5½ inches. It is well to have a spare cam shaft with cams and pulley all fitted on it in readiness, and when a break occurs it may be rolled into position in 3 hours while the turning and fitting of a new shaft would take at least 48 hours.

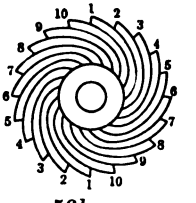

FIG. 56*b*. — END VIEW.

§ 130. CAMS. — (See Figs. 57*a* and 57*b*.) These serve to lift and rotate the stamps. They consist of one or more (generally two) arms cast on hubs which are held to the shaft usually by keys. The lifting surfaces of the arms are made spiral to suit the conditions of lifting. They are backed by strengthening ribs. The double-armed cam gives less journal friction than the single-armed, because it revolves half as fast. Sectional cams made with split hubs b lted together can be changed without stripping the whole shaft, but unless watched they are liable to work loose and are therefore not favored.

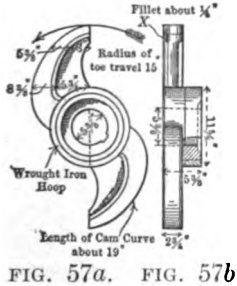

FIG. 57*a*. SIDE VIEW OF CAM.

FIG. 57*b*. FRONT VIEW.

When cast iron is used for cams a close-grained, strong grade of metal is chosen, and the bearing or lifting surfaces are chilled. The author finds that out of 17 mills, 9 use steel cams, 7 use iron, and one uses both. Open-hearth cast steel with 0.4% carbon, or chrome steel, is the best material for cams. On account of their superior strength they need not be made as heavy as cast iron. The natural life of these steel cams is indefinitely long unless the mill is very dusty, when they gradually wear down. They generally go by some accident, as a stamp dropping on the cam. They generally go at the hub; sometimes the tip breaks off.

Cams are keyed to the shaft by one or two keys. When two keys are used, they are 120° apart, furnishing three lines of bearing, while one key gives only

two lines of bearing. The former gives the greater stability but the latter is almost universally used in this country. The key should always be driven toward the stamp stem. Hardman finds that by using a key 6 inches long, 1¾ inches wide and ½ inch thick, with a taper in its whole length of slightly less than ⅛ inch, the cams never get loose and it answers much more satisfactory than when the taper is greater and the key smaller.

It is customary to have one long key seat in the shaft for each of the two batteries (see Fig. 58), and to cut key seats in the cams so as to give equal

FIG. 58. — CAM SHAFT FOR TEN STAMPS.

intervals of time between the drops. It follows that where two-armed cams are used, the key seats will be advanced 36° on the hubs of consecutive cams for a 5-stamp battery, or 18° for ten stamps. In the latter case the even numbers will be in one battery and the odd in the other.

§ 131. DESIGN OF CAMS. — The lifting surfaces are in the form of an involute of a circle, the radius of which is equal to the distance between the stamp stem and the cam shaft center to center. Practically this curve is laid out by unwinding a string with a marking point at its end, from a circular disc of wood turned with the above distance as its radius. (See Fig. 59.) The length of string as BC, unwound from any given point, as C, represents the height to which the stamp will be lifted by the corresponding point B of the involute surface, provided the whole of the surface from A to B had been used during the lift. The radius of the inscribing circle is therefore equal to the radius of the cam shaft plus that of the stem plus a small amount which is called clearance, which prevents the stem from rubbing upon the cam shaft.

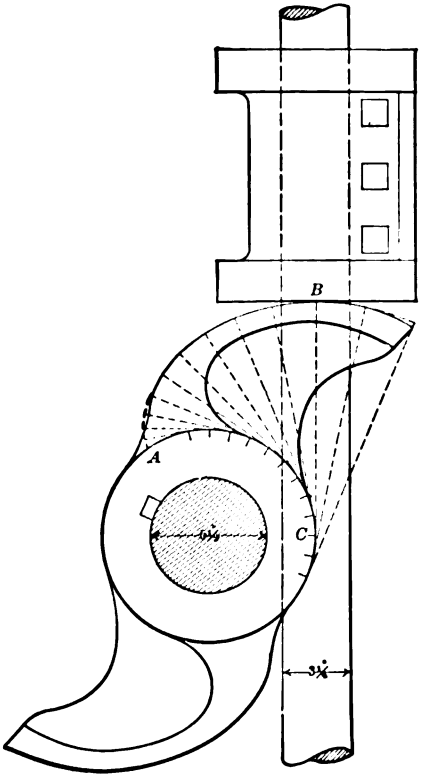

FIG. 59. — CAM CURVE.

It is essential that the distance between the centers of the cam shaft and the stamp stem should exactly equal the radius of the inscribing circle; otherwise the cam will not strike fair against the face of the tappet and there will be increased jar, noise, and breakage. Hardman reports that a Nova Scotia mill had fifteen cams break in a week, owing to the distance between cam shaft and stamp stem being ⅛ inch too much. Even chrome steel cams and tappets were pulverized by being out of center.

In practice there is a dividing point at about 7-inch drop. As we go above this point, the diameter of the inscribing circle is increased to suit the height and speed of drop, to do which, as the drop increases, the clearance can be increased

by any desired amount. Below this point the works use an inscribing circle the diameter of which is nearly constant for all the lesser drops; the figures given are from 11½ to 9 inches.

In designing cams it is common to give them a little larger inscribing circle and therefore a little longer curve than that intended to be used, so that a slight increase of drop can be had if desired, while on the other hand, a decrease of drop can be obtained as an expedient by raising the tappet and thus using only a part of the cam curve.

On the last 2 to 4 inches at the point of the cam, the curve becomes sharper, departing from the involute and approaching the arc of a circle, as shown in Fig. 59, thereby much lessening the pressure of the cam upon the tappet. The cam is cut away on the delivery side in such a manner that the tappet will leave the cam from an arc of contact between 1 and 2 inches in length, instead of from a point of contact. These two provisions are planned to save both the tappet and the cam from cutting and breaking at the moment of parting company.

The face of the cam is 1½ to 3 inches wide and is much thicker near the hub than at the point. It is backed by a web about 1¼ inches thick which gives the requisite support. This web for the California stamp is 3 inches wide at the point and widens to 9 inches at the hub. Regarding the hub, the rule of the E. P. Allis Co., is to make its diameter equal to the diameter of the inscribing circle and its length equal to half the distance between stems center to center. Fraser & Chalmers' Standard cam has a hub 11 inches diameter and 5½ inches long.

§ 132. Friction and Lubrication of Cams. — The rotation of the stamp which is accomplished by the friction of the tappet on the cam, is employed to even up the wear on the shoe and die by causing the shoe to drop in a different position each time. With rapid stamps, too much rotation indicates too little lubrication. This rotation is greater on the slow dropping stamps than on the quick, owing to the inertia of rotation of the stamps. The slow dropping stamps have longer cams, and this also causes more rotation. Although the stamps are rotating when they leave the cams, the speed of drop is so great that they are practically dropping vertically on the ore and probably no grinding action takes place even with the slowest dropping stamps.

The lubricants used are axle grease or other hard compounds, oil, tallow, molasses and water, molasses and flour, molasses without admixture, and soft soap with graphite. The last is best. Axle grease is made from the grease skimmed off in the manufacture of glue from animal matter. Grease is to be avoided, or applied very carefully, when amalgamated plates are used, because it sickens the mercury.

The lubricant is usually applied periodically by cotton waste nailed to a stick. A strip of canvas nailed under the guides and extending beyond them laterally, or a wooden shield fastened to the battery posts, is used in most of the mills to prevent the lubricant from getting into the mortar and onto the plates.

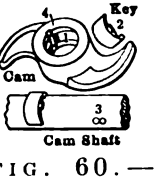

FIG. 60.— CANDA CAM.

Fig. 60 shows a form of self-tightening cam which is finding an extended use in this country. The cam has an eccentric groove (1) within the hub and occupying only a portion of the width of the same. The wedge key, which fits within the groove of the cam hub, is provided with a slot or recess (2) on its concave side which enables the studs (3) on the cam shaft to engage it and hold it in position. The slot (4) in the cam hub allows the cam to slip over the studs on the cam shaft. By reason of the positions of the studs on the cam shaft, the cams are interchangeable; that is, each of the series

of cams will take any one of the angular positions as determined by the position of the studs. The cams are loosened by striking them in a direction opposite to the load. They do not loosen under load as to the ordinary types of cams. There are numerous other types of self-tightening cams.

§ 133. THE STAMPS. — (See Fig. 44*a*.) Each consists of a stem or rod, a tappet by which it is lifted through the cam, a shoe which strikes the blow on the ore on the die, and a boss or stamp head which connects the shoe to the stem and gives added weight.

§ 134. STAMP STEM. — (See Fig. 61.) This is made solid of wrought iron or mild steel. It is turned to a true cylinder or it is cold rolled and has a taper at both ends, so that it can be reversed. Its duty is to connect the tappet with the boss and transmit rectilinear oscillating motion from the cam to the shoe.

FIG. 61. STAMP STEM.

§ 135. THE TAPPET is made of either cast iron or cast steel, bored to fit the stem loosely. It serves to transmit the lifting power of the cam to the stamp. According to Louis, good, close-grained, tough cast iron is better than any other material, but the tendency in this country seems to be toward the use of steel. It is reversible, having a flange above and below; the lower flange receives the lifting force from the cam. The gib tappet (see Fig. 62), invented by Zenas Wheeler, is attached to the stem *A* by a wrought iron or steel forged gib *B* and two or three keys *K*. The latter number should be used for heavy stamps. There is a rib cast upon the side of the tappet to give the requisite backing for the keys. The gib is flat on the back, concave cylindrical in front to fit the stem, and is set in a recess in the tappet. The keys are of steel, slightly wedge-shaped, and force the gib against the stem sufficiently to lock the tappet at any desired height.

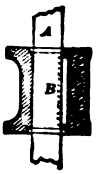

FIG. 62. — SECTION OF TAPPET.

The ends of the tappet are counter-bored about 1 inch wide and 1 inch deep, to prevent it from wearing conical and giving a lateral thrust to the stamp. The wearing surface is from 2 to 3 inches wide.

§ 136. THE BOSS OR STAMP HEAD (see Fig. 63) is cylindrical, of the diameter of the shoe and of varying lengths (18 inches is common). The most frequent cause of breakage in stamp stems is the side thrust introduced when the shoe hits a piece of ore on one edge. To avoid this boss heads are sometimes used as long as 42 inches. This brings the center of gravity down very low and is said to result favorably. (See Fig. 48.) It serves to connect the stem or stamp rod with the shoes and also to bring up the weight to the total called for. It has a socket below to suit the shank of the shoe, and above, for the taper of the stem. These sockets are sometimes connected by a small hole through the center of the boss. There are two horizontal keyways, generally at right angles, into which wedges may be driven for removing the shoe and stem.

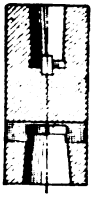

FIG 63. — SECTION OF BOSS.

The boss is made of a tough cast iron, or less frequently of steel. The upper socket is bored, the lower is left rough. The joint between the boss and the shoe is made by tying on a set of staves around the shank of the shoe. (See Fig. 64.) These are ⅜ to ¾ inch thick, and are shaped to cover the slope surface of the shank. They are made of sawed,

dry pine, which swells much with water. A plan for saving time at the clean-up is to wrap a strip of canvas around a shoe shank and tack the staves to this. The points of the tacks, striking the shoe shank, turn up, clinch, and hold canvas and staves together. These so-called bracelets or collars are readily slipped off the shank of the shoe and kept in stock. In dry crushing, staves of wrought iron are often used instead of wood. Bosses wear around the bottom, due to the scour of the sand and water, especially when the shoe is nearly worn out. The sockets may also gradually become enlarged. In this weakened condition the boss breaks or splits. The final break may be hastened by an accident, such as a shoe falling off, a shoe pounding on a naked die, or a shoe breaking, and its neck being driven up into the head.

FIG. 64. — STAVES ON SHOE SHANK.

§ 137. THE SHOE (see Fig. 65), as now universally adopted, consists of a cylinder or butt, surmounted by a truncated cone or shank. The diameter of the butt is generally the same as that of the die, and ranges from 8 to 9½ inches.

FIG. 65. — SHOE.

The rounding of the junction between the shank and the butt is to prevent fracture at that point and also to prevent contact between the butt and the boss. Some manufacturers consider the rounding unnecessary and omit it.

In regard to the taper or the angle of the shank, the more acute this angle the stronger will be the joint between the boss and the shoe, but the greater is the tendency to split the boss and bottom the hole, and if it bottoms, it fails to get the full benefit of the wooden wedges.

If of chilled cast iron, the butt should be cast in heavy chills, the shank cast in sand. This gives hardness to the butt and toughness to the shanks.

The shoe should not be allowed to wear so thin as to permit undue wear on the boss.

Both shoes and dies are to-day almost invariably made from some form of forged steel. Chilled iron was formerly used but is to-day used only in the case of large mills when a foundry is available for re-casting the parts taken out.

§ 138. DIES. — These are the wearing parts upon which the rock is crushed by the falling stamp. They lie in the bottom of the mortar and relieve it from the wear due to crushing.

Dies are made cylindrical with axes vertical. They are held in place either by a cylindrical socket in the bottom of the mortar, by lugs cast upon the dies (see Fig. 66), which, when turned 90° under flanges on the sides of the mortar, lock the dies in place (used more particularly in dry crushing), or most commonly of all, by having square flanges or foot plates as in Fig. 67, cast upon the bottom of cylinders which are large enough to fill practically the whole space of the bottom of the mortar, and, therefore, line up the dies.

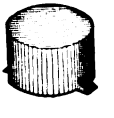

FIG. 66. — DIE WITH LUGS.

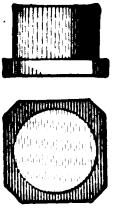

FIG. 67. — DIE WITH FOOT PLATE.

§ 139. LIFE OF SHOES AND DIES. — These parts diminish by the cutting action of hard rock and by the breaking off of their edges. The hardness of the metal resists the first, toughness resists the second. Uniformity of structure is desirable for resistance to either loss. It follows that the metal must be hard, tough, and of uniform structure.

The shoes wear faster than the dies; with California short drop 1.2 to 1.8 times as fast, using the same material for both; with Colorado high drop 2.5

times as fast. The reason of this probably is that in transmitting the force of the blow from the shoe to the die through the rock energy is absorbed in fracturing the rock, which is shattered before it can transmit the force, and to a certain extent it cushions the blow. This action is emphasized by the fact that the die is usually protected with a layer of rock slightly thicker than that for maximum capacity, in order to prevent the dies from breaking. The life of shoes and dies is increased by mechanical feeders and by preliminary reduction with rock breakers.

The shoes and dies wear to uneven surfaces, but, owing to the revolution of the stamp, the unevenness generally has a certain regularity around the circle as if the two surfaces were turned in a lathe. Sometimes the shoe wears convex hemispherical and the die concave to fit it, but perhaps the most common wear is for the shoe to be concave in the center and convex annular around the edges, while the die is the reverse. (See Fig. 68.)

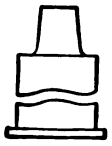

FIG. 68. — WORN SHOE AND DIE.

Without giving a series of figures showing the exact life of shoes and dies it may be stated that forged steel shows under ordinary conditions the longest life. One set of forged chrome steel shoes and dies should crush not less than 300 tons of very hard ore. In South Africa the average wear is 340 grains per ton of ore crushed. This is on hard gold ore.

§ 140. PROPORTIONS BETWEEN WEIGHTS OF PARTS OF A STAMP. — In regard to the weights of the parts, it would seem wise to concentrate the weight at the bottom so that the pull upon the tappet may be as direct as possible and consequently, the wear on the guides at a minimum. This weight should be put in the head rather than in the shoe to prevent too great variation in weight due to wear of shoes. Added weight is sometimes obtained by putting on extra tappets at the top of the stems. This is not to be commended, as it makes the stamps top-heavy. The place for the weight is in the boss. The stem must be thick enough to prevent bending.

§ 141. DRIVING MECHANISM. — The cam shaft is generally driven by belt and pulley. With belts the usual method is to operate two batteries of ten stamps with one cam shaft. This is driven by belt from the main shaft. Rubber belts are preferred as they are not injured by moisture.

The pulley for belt transmission in all the mills visited, is built up of wood upon a hub of flanges and cast iron, as in Fig. 44*b*. This is to avoid cracking, due to vibration.

The tightener (see Fig. 44*a*) is a pulley mounted upon a frame which swings or slides in a guide in such a manner as to press inward upon the belt and take up its slack when it is desired to start the stamps.

§ 142. LATERAL THRUST, RIGHT AND LEFT-HAND CAMS. — The tendency of the tappet is to push the cam away from the stamp during the act of being lifted. (See Fig. 69.) This is greatest at the moment of leaving the cam. If the cams on one battery are all right-hand cams, while those on the other are all left-hand, then the one set of thrusts will balance the other. In this way the thrust upon the collars is brought to a minimum. This thrust is greater the greater the eccentricity of the support. For this reason hubs are put only on one side of the cam. The stems are put on the opposite side and as close to the cams as is safe, *i.e.*, from ⅛ to ¼ inch.

FIG. 69. — LATERAL THRUST.

A right-hand cam (see Fig. 70), is one which is to the right of the stem when the top of it is moving from the observer; the hub also is to the right of the cam. A left-hand cam (see Fig. 71) is just the opposite.

§ 143. WATER PIPES. — Water is fed into the battery in wet stamping to flush out the pulp and carry it over the plates to the vanner. The pipes deliver at the rear. Round way plug cocks with a removable wrench or dial clocks are preferred to other forms.

§ 144. FEEDERS. — From the bins the ore comes by chutes to the automatic feeders. (See Fig. 44*a*.) It is customary to feed the battery by the fall of one of the stamps. The thickness of the layer of ore upon the die determines the lowest position the stamp can take. When too thin, either the tappet, or a collar on the main stamp stem, strikes a buffer which feeds the ore. The position of this buffer can be graduated by a hand screw.

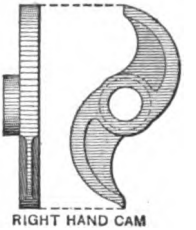

FIG. 70.

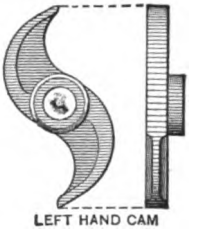

FIG. 71.

§ 145. FINGER BARS, CAM STICKS, AND OVERHEAD CRAB. — Finger bars are used for hanging up the stamps. (See Fig. 44*a*.) They are props which are pivoted upon a jack shaft resting in brackets bolted to the posts, and can be swung under the tappets to support them on the sides opposite to the cams. The five stand upon one jack shaft which must be strong enough to hold up five stamps together. The jack shafts are 3 inches in diameter and long enough to reach between the posts. The finger bars are shod on the end to prevent wear and are provided with handles. The stamp is lifted above its usual height by placing a skid or cam stick upon the cam, and at the instant the stamp reaches the top of this lift the finger bar is swung under and so supports the stamp at a point higher than that reached by the cam.

The cam stick is either a square stick of wood, greased on the under side and shod on the top side with rubber or leather to prevent slipping on the tappet, or it is sometimes made of strips of belting riveted together.

AMALGAMATION AS APPLIED TO GRAVITY STAMPS.

§ 146. AMALGAMATION. — The properties of mercury which enable it to form alloys with gold and silver are made use of in milling for the extraction of those metals from their ores.

§ 147. PROPERTIES OF MERCURY. — Mercury freezes at 39° F. below zero. It vaporizes to a very slight extent at ordinary temperatures, more rapidly at 100° F. and at 212° F., sufficiently to salivate an incautious workman. Its capillarity is negative except to those metals with which it easily amalgamates. To these, when their surfaces and that of the mercury are clean it is positive, that is, it wets them. It is not affected when pure, by air, but, when impure, oxidation of the metals forming impurities takes place on the surface, and the oxides formed are absorbed by the mercury. Mercury and all its salts are violent poisons. Raw white of egg or potassium iodide is the best antidote. Strong nitric or sulphuric acids attack mercury; hydrochloric acid, dilute sulphuric, or pure dilute nitric acid attack it little or not at all; dilute nitric acid containing nitrous acid readily attacks it however.

§ 148. AMALGAMS. — If a grain of clean metal, for example, gold, comes in contact with clean mercury, according to its thickness, the particle becomes either entirely combined or superficially coated with mercury, and if two such particles come in contact with each other they are loosely cemented or soldered together. Such aggregations, which are alloys of the metals with mercury, are called amalgams.

Certain metallic compounds such as cerargyrite (chloride of silver) or argentite (sulphide of silver), under conditions favorable to the reaction, are decom-

posed by mercury forming chloride or sulphide of mercury and silver amalgam.

Mercury also unites readily with copper, lead, tin, cadmium, zinc, bismuth, sodium, potassium, and some of the rare metals. The affinity of mercury for the metals increases with the temperature. In the case of arsenic and antimony heat is necessary for amalgams to form and in the case of antimony the amalgam is broken up upon cooling. By using a voltaic couple with a dilute acid and mercury as the negative electrode, it unites with nickel, cobalt, manganese, iron, chromium, aluminum, and platinum. Mercury forms an amalgam with the above metals when their salts are treated by electrolysis with mercury as the negative electrode. Sodium amalgam will decompose most of the salts of the metals yielding amalgams of mercury and the metal derived from the salt.

In milling three amalgams of gold may be considered. The first is liquid. This appears like mercury and may be considered a saturated solution of solid gold amalgam in mercury. When filtered through chamois skin it contains about 0.1% of gold at 60° F. The quantity contained increases with an increase in temperature and decreases with the separation of solid amalgam when the temperature falls below 60° F. After standing several months, at about 68° F., crystals of amalgam will separate out from this, leaving a solution with only 0.0683% gold. Even this, when filtered through boxwood, is reduced to 0.0601%, which probably represents the amount of gold held in permanent solution at 68° F. The second is solid. The gold here is combined in some definite chemical proportion with mercury, and the amalgam has a definite crystalline form. Native amalgam occurring in California ranges from 39.02 to 41.63% gold, corresponding to the symbol Au_3Hg_2. This is probably the amalgam formed in the mills. The third form of amalgam consists of nuggets of gold superficially coated and cemented together by the first and second types of amalgam. By straining mill amalgam through chamois skin, one gets No. 1 amalgam in the liquid which goes through, and a residue, which approximates No. 2 amalgam, according as No. 1 and No. 3 are absent from it. If No. 1 is present in excess it will soften the amalgam and diminish the percent. of gold; if No. 3 is present it may greatly increase the percent. of gold. Silver amalgams may be divided into three classes similarly to gold amalgams.

§ 149. Apparatus Used for Amalgamation. — For amalgamation or separation of precious metals from their ores by mercury the following devices are used:

Stamp mill.

Arrastra, Huntington.

Amalgamating Pan.

Inside plates, that is, amalgamated plates inside the stamp or other crushing mill.

Outside plates.

Mercury wells and traps.

Mechanical amalgamators which do not combine crushing with amalgamation.

Clean-up devices.

At this place we shall discuss amalgamation only as it refers to stamp-mill practice.

§ 150. Amalgamating Plates. — Amalgamating plates are primarily of two kinds, inside plates, that is, plates within the mortar and outside plates. There are several varieties of outside plates all or only a part of which may be found in any given mill. With a few exceptions they all come under one of the following heads:

(*a*) Splash plates or plates on the splash board.
(*b*) Lip plates or plates on the mortar lip or mortar aprons.
(*c*) Apron plates or the wide plates that are disconnected with the mortar.
(*d*) Sluice plates which are narrow plates usually following the apron plates.
(*e*) Shaking plates including plates on the vanner distributor.

§ 151. INSIDE AMALGAMATED PLATES. — These are generally of soft annealed copper plate ⅛ inch thick, simply coated with quicksilver, sometimes also silver plated. Amalgam accumulates so rapidly on them, however, that silver plating is not really necessary. They are used to catch gold in the battery, utilizing the impact of the gold particles derived from the wash of the stamp, as a means of obtaining contact of the gold with the plate. If placed too near the stamp, the amalgam is scoured off. Custom favors a single plate in the front of the mortar between *A* and *B*, Fig. 72. A few mills use front and back plates.

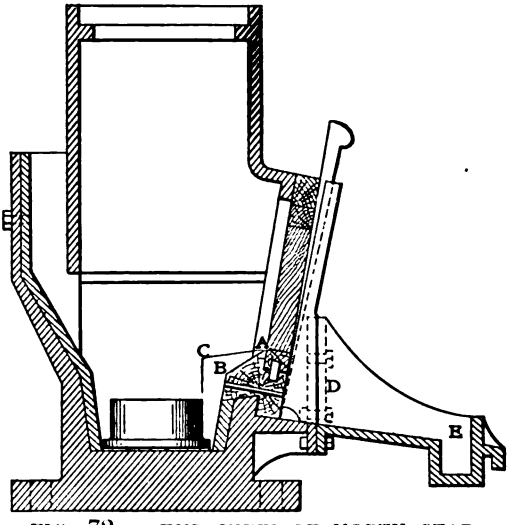

FIG. 72. — END VIEW OF NORTH STAR MORTAR.

The objections to the use of back plates are: (1) They widen the mortar, and diminish thereby the speed of stamping; (2) they cannot be adjusted easily to suit the height of the die, and (3) they are ordinarily out of sight in the dark, and difficult to care for properly.

The position of the front plates on the chuck block has already been described.

§ 152. OUTSIDE PLATES. — These plates include all the plates outside the mortar itself.

Splash Plates. — The purpose and position of these plates have been described under a previous heading. (See § 125.)

Lip Plate. — The lip plate is a short copper plate, 3 to 18 inches long and extending the width of the mortar resting on the lip of the latter. This plate should be heavily silvered, at least three ounces of silver to the square inch being put on it. It should extend about one-half inch beyond the iron lip of the mortar and the wooden strip on which the screen rests is placed on top of the plate and holds it firmly in place. The pulp coming through the screen passes first over this lip plate and then drops upon the apron plate below. A large part of the fine gold that is not caught by the splash plate is caught on the lip plate.

Apron Plates. — The term apron plates as used by the author includes those plates which come next to the mortar and are of a width about equal to the length of the mortar; also all subsequent plates that are no narrower than the first apron plate. The length of these plates in the mills varies from 10 inches to 16 feet. At their lower ends they are sometimes narrowed to the width of the sluice plate.

Sluice Plates. — Sluice plates are the plates narrower than the length of the mortar or the plates preceding. According to some authorities it is best to have all the plates from beginning to end of the same width, which width

should be slightly greater than the length of the screen discharge. If much wider it is difficult to get good distribution, if narrower the current becomes deeper and swifter, more eddies are formed, and the wave effect is somewhat broken.

Shaking Plates. — The old scheme of using plates mounted on a shaking table is not much used to-day. What are in effect shaking plates are made by putting plates on the distributors of the vanner or shaking tables. Experience shows that shaking plates will save some gold and amalgam which has passed the stationary plates, the amount depending upon the ore and the manner in which it is treated. This is not only due to the settling of the gold directly by the shaking motion, but also to the diminished slope which is used.

§ 153. PRINCIPLE OF ACTION. — These are generally copper plates coated with an amalgam. They are set at an angle so that the pulp fed at the upper end flows down over them by gravity. During its passage the constantly recurring waves and the drops which the pulp makes upon the head of the plates, bring the free gold into contact with the surface so that it becomes amalgamated and adheres firmly to the plate while the sulphides are carried forward by the water. Mercury has to be supplied from time to time to keep the amalgam on the surface of the right degree of hardness and it is scraped off and the gold saved at intervals.

§ 154. TABLES FOR SUPPORTING PLATES. — These should be so constructed that the slope may be readily adjusted and at the same time be firm and rigid enough to remain constant in any position. This is to prevent any unevenness in the flow of the pulp and thereby avoid danger of loss which occurs when portions of a plate are alternately wet and dry.

Two tables, standing upon independent sets of legs and with independent adjusting wedges, are sometimes used which have two long plates side by side, each 2 feet wide. Before putting on the plates, the tables are dressed down $\frac{1}{16}$ inch in the center for the full length, causing a slight depression in the center of the plate, and, in consequence, the center of the wave to be in advance of its ends. If the tables are not dressed as described but are left flat, the pulp will not run so evenly but will tend to one side or the other.

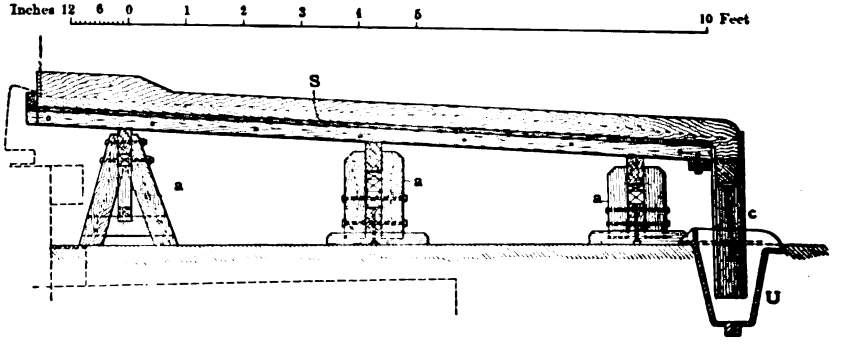

FIG. 73*a*. — TABLE FOR SUPPORTING AMALGAMATING PLATES.

Figs. 73*a* and *b* show a form of table that is used in South Africa for supporting amalgamating plates. In recent practice in Western Australia, two amalgamating tables are provided for each 5 stamps with the idea in view of minimizing delays due to dressing and scraping the plates. At the head of the plate a catch box is provided for receiving the pulp as it comes from the mortar. This catch box is provided with an outlet gate for each plate, so that while

one is being dressed or scraped the entire pulp may be turned over the other plate, thus avoiding the delays occasioned by having to hang up the stamps.

Plates as they come to the mill are rarely over 8 or 10 feet long, so that in almost all of the mills the amalgamated plates are made up of sections, which are laid either overlapping or with butt joints. In the latter case they are sometimes brazed together in one sheet.

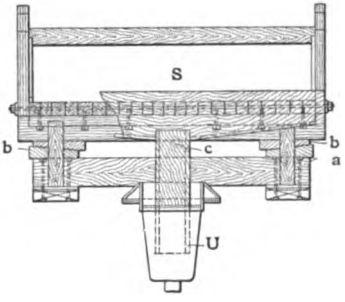

FIG. 73*b*. — END VIEW.

In some of the mills blankets are placed between the plates and the tables. The sections are laid with butt joints. On each side of a joint is a row of screws fastening the plates to the table, and there are also cleats at the sides. Copper screws are best for this work, being of the same character as the plates; brass becomes brittle, while iron causes galvanic action which enlarges the holes. Several authorities advise not using screws at all, but to have the sections of the plate overlap and fasten them down by buttons or wedges at the sides so that they are easily removable.

§ 155. POSITION OF PLATES IN THE MILLS. — In American mills outside plates are almost universally placed just following stamps or other fine crushing apparatus, and preceding concentrators. In Australian mills there is considerable variation in the position of the outside plates. In the majority of cases, however, they follow directly after stamps. The arrangement of the plates varies greatly in the mills. We may have a simple arrangement consisting of a large apron plate followed by a mercury trap or a more complicated arrangement consisting of a number of separate plates with mercury traps and back deflectors interspersed.

One large plate has the advantage that it is easily cared for, but it lacks a very important aid to the catching of amalgam, viz.: the use of steps or drops along the line of plates so that the pulp falls upon the head of a plate from a height of not over 2½ inches. These cause many of the particles of float gold to come in contact with the surface of the plate and be saved. They also serve an additional purpose to that of simply catching amalgam, inasmuch as they act as very efficient distributors for the pulp, so that the motion of the pulp is that of regularly recurring waves which help and assist amalgamation by rolling over the sands. This breaking up of apron plates and sluice plates into overlapping sections also allows them, in many cases, to be easily removed and interchanged, which makes it easier to keep the whole line of plates in good condition.

The amount of the drop is very important; if too much, the falling sand very soon scours away the amalgam on the plate, exposing the red copper and completely undoing the work which the drop intended to perform. When the drop is right, however, the amalgam will build up under the stream more than at any other place. The height of fall exceeds 2½ inches only in a few instances, and the average is not far from 2 inches. In one mill on seven batteries where the pulp fell 8 inches upon the lip plate, it had cut holes entirely through the copper, while on one battery where the drop was only 5 inches, the cutting did not occur. Another mill has studied this question and advocates that pulp be never run over 3 feet, or, better, 2 feet, without allowing it to drop. In this mill, where the pulp drops ½ inch from the lip to the apron plate, the amalgam builds up ten times as much as anywhere else.

A scheme of drops favored by Mr. J. E. Clayton, is to drop the pulp upon

the plates through sheet iron distributors *a*, punched with ¼-inch holes with the buhr left on. (See Fig. 74.) He found that if the fall was too great, the streams cut holes, and if too small, it built stalagmites. He preferred 1½ inches drop. He recommends short plates, as the main catch takes place under the distributor. Under ordinary conditions, three short plates were sufficient, but where the gold is fine and difficult to amalgamate, the number may be increased.

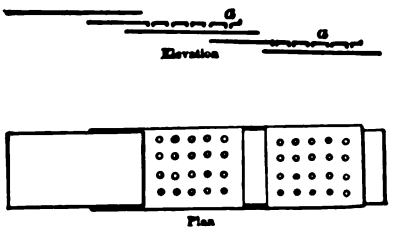

FIG. 74. — CLAYTON'S SCHEME OF DROPS.

Louis Janin, Jr., holds that the use of drops is unnecessary, and that it is better to employ a straight run of plates of large area which will effect as high a saving as with the use of drops.

§ 156. DISTRIBUTORS AND COLLECTORS. — The distributors and collectors used in the arrangement of plates merit a little attention. As their name implies, the distributors serve first to distribute the pulp evenly over the plates. They may also serve, second, as a means of cutting out one side of a plate in mills where double plates are used; and, third, as a mercury trap.

§ 157. AREA AND THICKNESS OF PLATES. — The total plate area of a mill should be sufficient to catch practically all of the free gold. With an excess of area it is difficult to keep the last plates in good condition, owing to the very small amount of gold caught upon them. It is better to have an excess than an insufficiency, however.

The area to be used will vary with the conditions. Where the gold is coarse, the area may be less than where the gold is fine. For instance we find one mill treating coarse gold with a plate area of but 9.75 square feet for each 5-stamp battery. Where inside amalgamation is practiced, the area need not be so large as where all the gold is caught outside. Where narrow sluice plates are used, the area needs to be greater than with wide apron plate. Where there are numerous drops in the line of plates, the area of the plates may be lessened. The areas vary from 9.75 square feet to 102 square feet. The average of the 26 mills is about 55 square feet. In this connection it is well to keep in mind the fact that there are certain standard sizes made in rolling copper plates, and it is less expensive to arrange to use plates of corresponding sizes in the mill rather than to such sizes as will necessitate cutting and waste.

The thickness of plates is usually ¼ inch. Plates are found as thick as $\frac{3}{16}$ inch and as thin as $\frac{1}{16}$ inch. The thicker the plates are the less is the danger of their becoming dented by articles falling upon them.

§ 158. SLOPE OF PLATES. — The slope of plates is a very important adjustment. If they are too steep, the pulp rushes over them too rapidly, and the gold and amalgam have less opportunity to settle and adhere. Furthermore, the amalgamated surface will be scoured off. If they are not steep enough, then sulphurets will deposit on the plate and reduce its working area. The plates should be perfectly level from side to side. The slope should be made adjustable, although this is seldom done in the mills; the idea being, perhaps, that some stability and simplicity are sacrificed by so doing. By using a table similar to that shown in Figs. 73*a* and *b*, it seems that these difficulties are overcome.

The slopes found in the mills vary from 1 inch per foot or 4° 46′ to 2½ inches per foot or 11° 46′. There are a few plates that come outside of these limits, but they are short plates on mortar lips, or on deflectors. According to Preston, as low as ½ inch is sometimes used.

The slope to be used depends upon the following conditions, other things being equal in each case. More slope is required for an ore with a large amount of sulphurets than one with a small amount. More slope is required for a battery with a high crushing capacity than for one with a low capacity. An ore coarsely crushed requires more slope than an ore finely crushed. A wide plate requires more slope than a narrow one, as the water is spread out in a thinner layer on the former and its carrying power is consequently lessened. In changing from wide to narrow, unless the slope is reduced on the narrow plate, there will be a tendency for it to be scoured. Shaking plates or plates on the distributors of vanners require less slope than fixed plates. A short plate with the pulp falling upon its head requires less slope than longer plates as the pulp acquires a certain acceleration by its fall which helps to carry it over the plate. The greater the quantity of water used, the less will be the slope required. It is generally considered better to use only as much water as is absolutely necessary to cover the whole width of the plate and make the pulp sufficiently dilute, and have a moderately high slope corresponding, than to use a flood of water and a low slope.

The rule which appears to be generally followed in adjusting to get the best slope, is to make it as small as possible without allowing sulphurets to deposit.

Adams advocates a radical departure in regard to slope. He holds that the slope of plates should never be less than 2½ inches per foot (11° 46′), because in that case an excess of water will be required to keep all the pulp moving, and then the water will be so deep that fine gold will be held in suspension and may not touch the plates. A slope below 2½ inches also allows too much quicksilver to be used, making the amalgam so soft that there is more tendency for it to be carried off the plate and cause a loss of gold. The corollary of the above is that it would not be wise to increase the slope beyond that necessary to reduce the water to the minimum favorable for stamping.

§ 159. Speed of Waves and Thickness of Film. — When the slope is right, the pulp covers the whole plate and flows down in a series of waves which roll the grains in the pulp over and over and give them an opportunity to come in contact with the surface of the plate. The speed of these waves is an indication of correct adjustment. By measuring the velocity of these waves in a number of mills the author has found that they vary from 23 to 42 inches per second. The film is usually thicker at the center than at the edges of the plate. The thinner the film, the greater is the retardation. The film is also thinner at the lower end of the plate than at the upper, owing to the fact that the pulp increases in velocity as it flows over the plate.

§ 160. Materials of the Plates. — Amalgamated plates may be:

Copper coated with quicksilver.

Copper coated with silver amalgam or gold amalgam.

Copper plated with silver and coated with quicksilver.

Muntz metal (copper 60%, zinc 40%) coated with quicksilver.

Pure sheet silver coated with quicksilver.

Rough board covered with amalgam.

In addition to the above, surfaces of blanket or carpet are used to catch gold and amalgam, but these can not strictly be called amalgamated plates.

§ 161. Quality of the Copper for Plates. — Whether plain copper or silver-plated copper plates are used, only the purest and softest annealed Lake Superior or electrolytic copper should be employed. Annealing is necessary to soften up the hard skin formed by rolling and to make the copper porous for receiving the mercury. If the mill man is unable to purchase a copper plate already annealed, the annealing may be done as follows: the plate with

the face to be amalgamated uppermost, is supported a short distance from the ground, preferably upon a layer of sand on an iron plate. A fire of shavings and chips is built beneath and the plate is heated all over hot enough to char sawdust or a piece of paper on top. It is then allowed to cool slowly or it may be chilled at once in water; it matters not which method is used so far as the annealing is concerned, but the slow cooling will probably yield the truer surface. This heating softens up the surface, making it porous, and removes all the stresses due to rolling. If, after annealing, the plate is warped or buckled, it is laid upon its table and turned up by light blows with mallet and wooden block.

Plain Copper Plates coated with Quicksilver are sometimes used in the mills. A surface of copper amalgam is formed on such plates, which is a poorer catcher of gold than either gold or silver amalgam, and as a consequence it is necessary to run, say, 100 tons of ore over the plates before they have become sufficiently charged with gold amalgam to be good catchers of gold. The extra amount of gold lost with this 100 tons of ore is partly due to what escapes into the tailings and partly to what is absorbed into the plate. To this phenomenon has been given the name the *new plate error.*

Plain Copper Plates coated with Amalgam. — By painting on a thin coating of gold or silver amalgam, the plate becomes a good catcher of gold from the start and the new plate error, which occurs with plain copper coated with quicksilver, is avoided. Regarding the relative merits of gold and silver amalgam, the author's experience on test runs places the catching power of the latter very high. Authorities, however, claim that a plate covered with gold amalgam catches gold better than one covered with silver amalgam.

Silver-Plated Copper Plates coated with Mercury are used in a large number of mills. The mercury unites with the silver and forms a coating of silver amalgam, thereby avoiding any new plate error. For apron plates 3 ounces of silver per square foot of plate area should be sufficient while for sluice plates, 2 ounces should suffice. The interval of replating depends not only upon the thickness of the plating and the richness of the ore, but also on the care used in scraping the plates.

§ 162. Comparison of Plain Copper and Silver-Plated Plates. — Hardman prefers plain copper plate, coated with gold amalgam, for a company mill, as, if properly managed, it catches gold as well as a silver-plated plate, and it costs less than the latter. For a custom mill he prefers silver-plated plates, to overcome the over-lapping error due to the absorption of amalgam by a plain copper plate. By using a silver-plated plate, practically the full value of amalgam can be recovered from the plates after each run. The use of silver amalgam on plain copper will also prevent the gold in the ore from coming in contact with the copper to any considerable extent, and thus overcome the overlapping error, but its use in custom mills is not general as it brings in another item in settling accounts.

Silver-plated copper is easier to keep clean than copper plate, but even on the former some stains, due to oxidation of copper, occur. It is claimed by some mill men that the pickling a plate undergoes before the plating, causes salts to be retained which later come out and cause stain. Louis Janin, Jr., holds that where the gold is fine, requiring the plate to be kept in first-class condition, silver-plated plates are preferable since they can be kept in prime condition with less attention than copper plates.

Halse considers that there is a greater loss of gold with plain copper plates due: (1) to amalgam passing by the tarnished surface; (2) to amalgam loosened from the plates by the washing with cyanide and lost mechanically; (3) to amalgam lost chemically by the same reagent. He estimates this loss to be

at least 5%, and possibly 10%, of the total gold recovered. The fineness of the bullion was also found to be higher with silver-plated plates. The ore yields 0.96 to 2.32 ounces of bullion per ton; this bullion averages about 600 fine in gold and 350 fine in silver.

James R. Cooper writes in comment upon Halse's tests that the larger amount of mercury used with the plain copper plate will in part or in whole, account for the carrying of more gold down to the blankets, and that the relative amount of stain on the copper plate is a measure of the impurity (oxygen) in the plate, a pure soft copper being free from trouble, an impure hard copper with high percent. of oxygen giving great trouble, and since Halse does not state the analysis for oxygen of his plain copper plate, the results are not conclusive.

In reply Halse states that no analysis of the copper plate is available, but that he considers it to have been of good quality, being that commercially known as "brazier's copper." The annealing was carefully done and the whole surface scoured to bright copper before amalgamating. He thinks that the staining was not due to impurities in the original copper, although he is unable to give positive proof.

Sharpless gives an instance of a silver-plated plate which, with warm water (about 80° F.) flowing over it, became covered with a very hard crystalline amalgam and caused much trouble. Spots where the silver was worn off, however, remained in good condition.

Muntz metal plates coated with mercury (copper 60%, zinc 40%), are used in the Thames district of New Zealand, originally as an expedient, but now they are preferred to copper. According to Rickard, they absorb comparatively little amalgam, making them efficient from the start, and they can be cleaned of amalgam without the use of steel scrapers, and are therefore advantageous for custom mills, except where the ores are comparatively rich. They are cheaper, the amalgam on them is not sickened so much by base minerals, that is, by many of the minerals containing lead, copper, iron, arsenic, antimony, etc., and stains from grease, etc., do not form to such an extent as on copper plates. This may be due to electrolytic action of the zinc and copper liberating hydrogen from the water, which has a reducing effect. On the other hand, acid water causes a scum in some cases, which does not occur with copper. After a time, Muntz metal plates become brittle when saturated with amalgam and break when cleaned. According to Louis Janin, Jr., several mill men in New Zealand claim that the absorption of gold by Muntz metal is greater than by copper.

Plates of Pure Silver coated with Amalgam answer quite as well or better than silver-plated copper plates, because there is less tendency to stain. Their high first cost, however, and their liability to be stolen are points against them.

Rough, Unplaned Pine-board Surfaces. — A few mills use a rough pine board upon the mortar apron, 1 inch thick and 12 inches wide, flush with the lip. On this the pulp falls from the screen. When used a month it becomes coated with amalgam in patches, and can be cleaned up in one-eighth the time required for a copper plate. It will not stand the jar of the stamps like a copper plate, that is to say, the amalgam will not adhere and accumulate so thick as on copper.

Carpet or Blanket Surfaces. — Brussels carpet is sometimes laid over the last section of the apron plate.

§ 163. TREATMENT OF PLATES. — Under this general heading will be considered:

The preparation of new plates.

Maintaining plates of the right consistency.

The regular dressing of plates to keep the surface in a bright condition.

The cleaning or removal of accumulated amalgam from plates.

§ 164. General Considerations. — Before taking up each of these subjects it will save repetition to make a few general remarks which apply to all.

Copper is easily acted on by air and water to form a coating. Similarly a coating or stain of varying colors will form on a plate with copper amalgam. This stain, commonly called "verdigris" by mill men, according to Louis, is hydrated oxide of copper, with or without some carbonate. When water which contains sulphates is used, a basic sulphate may also form. Sulphide of copper probably also occurs in the coating. This coating may be removed mechanically by the use of some abrasive, as sand, or chemically by dilute hydrochloric, nitric, or sulphuric acids, a solution of a handful of salt and ½ teacup of sulphuric acid in 2½ gallons of water, ammonia, sal ammoniac, or potassium cyanide. It is now considered better to avoid the use of chemicals as far as possible except possibly potassium cyanide in the treatment of plates. It is claimed that the use of dilute acids, especially nitric, either in the preparation of new plates or in the dressing of plates, causes the formation of salts of copper, which will sooner or later work out to the surface of the amalgam and make a stain. Nitric acid also dissolves silver from silver-plated plates. This stain may sometimes be formed externally, as, for example, where the ore or water contains acid sulphates of iron or copper formed by the oxidation or roasting of pyrites. In this case the action is probably aided by oxygen and carbonic acid from the air and water.

There is another great difficulty in amalgamation besides the staining of plates, that is, the "sickening" and "flouring" of mercury, not only on plates, but also in the stamp mortar. These two terms are used rather promiscuously to denote the separation of mercury into minute globules by agitation, as in the stamp mortar, which globules are prevented from reuniting by the presence of a film of oxide, grease, or other foreign substance. Some authors define flouring as the separation into globules mechanically by agitation, and sickening as the coating over of these globules chemically, which prevents them from reuniting again. Among the substances are oxides, sulphates, sulphides or arsenides of base metals (lead, copper, iron, bismuth, arsenic, antimony, etc.), which have come from the ore or water. Any easily oxidizable metal present in the mercury itself oxidizes and may cause sickening. Ores carrying talc, serpentine, graphite, or clay form a coating on mercury, and cause sickening. Any babbitt metal, which may accidentally get into the stamp mortar, will cause sickening. Carbonate of lead is another cause.

Trouble from grease may be remedied by the use of an alkali, such as soda (soda ash), lye or burnt lime (CaO), which are added to the mortar at regular intervals. Any trouble from the grease of miner's candles may be largely avoided by the use of stearine candles instead of tallow. The advantage of stearine is that it does not drip over the rocks in the mine. A candle end of either material however should not be allowed in the mortar. Alkalies also remedy trouble from acidity. An easy remedy for acidity of the water is to run it over broken limestone. An instance of the failure of lye is given by Sperry, who found that lye (caustic potash) which was used in the mortar to counteract grease, reacted with the sal ammoniac used to dress the plates and produced ammonia, which precipitated iron from the water as the hydrate and formed a greenish scum. The lye was discontinued and the scum disappeared.

An extreme example of acid water is that of the Peak Hill mine, New South Wales, where the ore undergoes a rough roasting in heaps previous to stamping. A small amount of copper in the ore is changed to sulphate, and is dissolved by the water during stamping. As the water was used over and over, it soon became strongly charged with this copper sulphate, which deposited

a film of copper on any fine particles of iron abraded by wear, and in this condition the iron, so coated, was readily amalgamated by mercury. Instead of the ordinary gold amalgam, a very impure slime amalgam was obtained. The remedy which effectually removed the difficulty was to cease using the water a second time.

A graphite coating on plates may be removed, according to Hardman, in less than an hour by putting a shovelful of salt into the battery. As to whether this will act for the talc and serpentine coatings, the author is not informed.

Sodium amalgam has a powerful reducing action, which reduces the metal from any oxides, sulphates, sulphides, chlorides, etc., of base metals, and thereby removes these causes of flouring. This reducing action, however, causes base metals to go freely into the mercury, so it may do as much harm as good, and, besides, sodium amalgam is troublesome to make and keep. Its use is therefore generally not favored. The rule usually given for its employment is to add it to mercury fed to the battery in such amounts that the mercury will just adhere slightly to the edges of a nail that has been filed bright. If it coats the nail all over, more mercury should be added, while if it does not adhere at all, more sodium amalgam is needed. W. L. Libbey advocates that it be made much weaker than this, and reports that mercury containing 1 part sodium in 2,000 works very successfully with a Nova Scotia ore containing arsenopyrite and talcose slate, so that the loss of mercury in milling is less than $\frac{1}{10}$ ounce per ton of ore.

§ 165. AMALGAMATING NEW PLATES. — This is divided into two parts: the cleaning of the copper by any of the agents previously mentioned, to remove oxides and grease, and second, the coating of the plate with quicksilver or amalgam. The requisites of the process are that an even coating of amalgam be obtained, and all oxide of copper, grease, and chemicals used in the process be removed. Owing to the rapid formation of oxide of copper when exposed to the air, it is necessary to continue the use of the cleaning agents throughout the process. The amalgamation is best done with mercury. Nitrate or chloride of mercury or sodium amalgam have sometimes been used but are not favored.

Authorities differ somewhat in detail as to the best method of preparing plates. Accordingly several methods are here given.

Copper plates, coated with gold amalgam are prepared by Hardman as follows: Place the plate in horizontal position and wash with water. Paint the whole surface of the plate with a saturated solution of cyanide of potassium, using a 4-inch flat paint brush and moving the brush transversely across the plate. The solution dries rather rapidly and one coat is sufficient. Leave plate undisturbed for 24 hours, until its surface has turned a dark green. Scrub the whole plate bright, beginning at the top, by the use of some fine sand (usually screened from old dry tailings), and a scrubber made of several thicknesses or gunny sacking wrapped around a small block of wood. After the green scale has all been scoured off, wash the plate with water and sprinkle mercury upon it and rub it in with a clean chamois leather moistening both plate and rubber from time to time with a solution prepared by mixing one part of the saturated solution of potassium cyanide with five parts of water. The mercury "bites" immediately. This scouring and amalgamating can easily be done upon a plate 10 feet long and 54 inches wide, by one man in 8 hours. The plate should be a perfect mirror when done. Give the plate its proper slope and run water over it all night. The next morning, if any green stains have appeared, scrub such spots to bright copper and re-amalgamate. Paint the upper 2 or 3 feet with very fine gold amalgam, or, if gold amalgam is not available, with silver amalgam. The fine gold amalgam is best obtained by taking a piece of old

copper plate well coated with gold amalgam, and "sweating" it carefully over an ordinary kerosene lamp. The adhering amalgam is scraped off, put into a Wedgewood mortar with a little quicksilver and ground well together. Rapidly pouring off the mercury after skimming, leaves the coarser particles of amalgam behind, while the portion poured off, if allowed to stand 24 hours, may be carefully decanted from the fine amalgam which has settled to the bottom and which will be found to be of the consistency of cream. The plate thus painted is allowed to stand for at least 24 hours, and as much longer as possible before using. The plate is kept quite soft with mercury during the first two or three days of its use, the mercury and amalgam being brushed up toward the upper end of the plate with a flat paint brush.

Louis gives the following method of preparation of plain copper plates coated with quicksilver: Fine sand (sea sand if obtainable) is sprinkled on the plate, well moistened and rubbed in with a block of wood until every portion of oxide is removed and the plate has a uniform red surface, care being taken at the same time not to scratch it. The sand is then washed off, and the plate dried and polished with fine emery paper folded over a block of wood. A perfectly clean dry surface is thus produced. A mixture is then made of about 10 parts sand to 1 of coarsely pounded sal ammoniac; this mixture is damped with water and clean pure mercury is sprinkled into it by squeezing through canvas. The mixture is then rubbed over the plate with a piece of canvas or blanket when amalgamation will at once begin; more mercury must be sprinkled on the plate from time to time, and the rubbing continued until a uniformly bright silvery surface is obtained. Each square foot of copper will require about $\frac{1}{2}$ ounce of mercury. The plate is next well washed with water and kept until the following day. It will then probably be found that the plate is dulled and covered with a coating of a greenish gray substance. Usually the plate is brightened up with a dilute solution of cyanide together with a little mercury.

For preparing plates coated with silver amalgam, he proceeds in the same way except that he rubs in silver amalgam instead of mercury. The silver amalgam is prepared as follows: Dissolve a sufficient quantity of silver coin (about $\frac{1}{4}$ ounce per square foot of surface of the plates) in dilute nitric acid in a porcelain basin, with the aid of a gentle heat. Evaporate to dryness very gently, preferably over a water bath, and heat until the saline mass commences to fuse, and till all its bluish tinge is turned to grayish black, this change indicating that all the soluble cupric nitrate is decomposed, insoluble cupric oxide being left behind. Dissolve in a small quantity of water and filter into a jar or beaker. Add pure mercury to the weight of about three times that of the silver used and float a few pieces of bright iron on the mercury. The silver will at once commence to precipitate and be absorbed by the mercury, forming silver amalgam, the process taking a few days to complete thoroughly. The silver amalgam so produced should be of pasty consistency, and contains about 3 parts mercury to 1 part silver. This amalgam is then rubbed hard all over the surface of the amalgamated plate, which is kept moist with a dilute solution of potassium cyanide; a good rubber for this purpose is made from a strip of pure india rubber $\frac{3}{8}$ inch thick, and about 6 inches long screwed to a strip of wood which forms its handle and projecting $\frac{3}{4}$ inch therefrom. The rubbing must be continued until the whole of the plate is completely coated with silver amalgam, which will then keep the plate from tarnishing.

The author's experience has been that the removal of any copper from the silver is unnecessary, and that nearly all of the silver is precipitated in from 30 to 60 minutes, and what little is left may be extracted for another occasion. The essential thing is to keep the solution acid to prevent the precipitation of basic salts of mercury; a large excess of acid, however, should be avoided. It

has been found best to amalgamate the plates with mercury first, then to dry them carefully with cotton batting, as the least addition of water will bring out the yellow stain. The silver amalgam can be painted on with a long bristle flat brush just before the plates are to be used, or, preferably, over night. In the latter case, the amalgam forms a harder coating upon the surface, which is more permanent. The proportions which have been found by the author to work satisfactorily are to use for each square foot of plate: silver, 7 grams (about ¼ ounce); nitric acid (1.2 specific gravity), 28 cubic centimeters; water, 60 cubic centimeters; mercury, 112 grams. Precaution should be taken not to boil the acid in dissolving the silver, as the volume of the solution is thereby lessened.

For coating Muntz metal plates with quicksilver they are scoured with fine sand, washed with water, cleaned with sulphuric acid (1 strong acid to 6 of water), and then the quicksilver rubbed in.

§ 166. MAINTAINING PLATES OF THE RIGHT CONSISTENCY. — Plates should not be run too hard or too soft. If too hard they will fail to catch the gold. If too soft, the mercury flows off the lower end of the plates, wasting gold and mercury. Their condition is judged by the feeling of the plate next to the battery. When just right the amalgam should yield to the pressure of the finger, as does putty, but drops of mercury should never exude and run down. The amalgam is generally softer on the later plates than on the earlier. The amalgam is kept in the right condition by regulating the amount of mercury fed to the mortar. If too hard, increase the mercury fed; if too soft, decrease it.

Where the gold is fine, the plates should be run drier or harder than with coarse gold. Fine gold also requires a larger and more frequent addition of mercury. In many mills, mercury is added directly to the plates as well as inside the mortar in order to keep them in the right condition.

§ 167. DRESSING OF PLATES. — The act of brightening the surface of a plate to remove the stain and make it more active is called dressing the plate. The act of scraping off the amalgam to save it is called cleaning the plate. The dressing of plates occurs at various intervals in different mills. Every 12 or 24 hours is perhaps the most common. If the amalgam is removed from silver plated plates too frequently or too close, the silver coating disappears very rapidly and soon the copper is exposed and the plates become stained. There are only two remedies for this state of affairs. The plate may be removed and silver plated or it may be amalgamated with gold amalgam and more care taken in the future when removing the accumulated amalgam. In cases of this sort the plate should first be cleaned and scoured with a solution of potassium cyanide until the pure color of copper is shown. Quicksilver should next be rubbed in thoroughly and any excess removed. The plate may now be coated with a little gold amalgam made from floured gold. Afterwards in dressing and cleaning up the plates the amalgam should be pushed toward this part of the plate until it keeps as bright as the balance of the plate. For California ores Adams recommends the following solution to be used in dressing the plates. "Take two quarts of water and add to it two to four ounces of cyanide of potassium, and when this has partially dissolved, add a pint of a saturated solution of copperas and stir the mixture thoroughly." This solution is especially recommended for stains caused by telluride of gold, selenide of gold, and iridosmium. When dressing the plates the stamps of one battery are hung up, the water turned off, and the concentrators attached to that battery stopped. A stream of clear water is directed upon the screen and then over the plates until all the sand and slimes are removed. Next starting at the bottom of the first section of the apron plate a whisk broom is dipped into the mixture and the plate brushed with a circular motion, the strongest move-

ment being so directed as to carry any amalgam toward the head of the plate. This is repeated until the entire section has been scrubbed. The splash plate is then tilted and brushed over and afterwards the broom is drawn lightly over the lip plate, any amalgam which is disengaged being brushed to the apron plate. The plate is now brushed up in a straight line and all the loose amalgam, etc., collected in a small heap, taken up with a rubber and small iron scoop and saved until the time of the general clean-up. Any of the remaining plates that may be stained are similarly treated. The amalgam now lies in ridges parallel to the current. To change these ridges to transverse ridges the plate is brushed from side to side with a whitewash brush beginning at the bottom and working toward the battery. The water may now be turned on and the stamps started. It is a mistake to attempt to dress the plates with the water running as particles of amalgam are sure to be lost. The ideal thing is to have two apron plates for each 5-stamp battery arranged side by side so that the pulp can all be turned over one plate while the other is being dressed.

§ 168. CLEANING OR THE REMOVAL OF ACCUMULATED AMALGAM FROM PLATES. — This takes place at intervals varying all the way from 1 day (24 hours) to 30 days. The former is by far the more common and in a few mills the cleaning occurs at the same time as the dressing. It is claimed that more amalgam is obtained by frequent cleaning, but it is a question which will be decided by the ledger whether the increase is sufficient to pay for the additional time lost in cleaning.

In a general way, the cleaning consists of the softening up of the amalgam by the use of quicksilver rubbed in with a cloth or brush, and the collection of the amalgam by a rubber scraper. A steel scraper for removing patches of hard amalgam is recommended in some mills and condemned in others. After the amalgam is removed, the plate is dressed and is then ready for use again. It is found in most mills that cleaning plates in the way just indicated does not remove all the amalgam, but that there is a tendency for a layer of hard amalgam to gradually build up which can not be removed except by: (*a*) prolonged scraping; or (*b*), "sweating" with boiling water or hot sand; or, in some cases (*c*), by hammering and buckling the plate; or (*d*), by acid treatment. A thin coating of amalgam should always be left after cleaning in order to have the plate retain its efficiency as a catcher of gold. It is generally considered better not to allow this hard amalgam to collect to any great extent, as it is liable to make the plates work unevenly. It also represents so much capital tied up, and, finally, it is a temptation to theft. In custom mills, its growth will cause an "overlapping" error with each succeeding run, which can hardly be tolerated.

Where the cleaning of the plates is carried out at the same time as the dressing the following procedure has been adopted in one of the mills. The plates are first hosed off with clean water to remove all sand, sprinkled with sufficient quicksilver to wet them all over and scrubbed with a whisk broom to loosen as much amalgam as possible. They are then rubbed down with a piece of 75% pure india-rubber ½ inch thick and 4 × 7 inches in size. The amalgam so collected is removed by an amalgam scoop. The plates are again rubbed with the whisk broom, mercury being sprinkled on at the head as required. The last section is always brushed upward from the extreme end, so that in case any amalgam should be hanging to the edge of the plate, it will be brushed up to where it can be readily seen and picked up. Every five or six days a weak solution of potassium cyanide made by dissolving two or three lumps of cyanide in a pail of water is used. The time required for two men to dress 24 plates, each 22 feet long and 2 feet wide, is from 1½ to 2 hours. Once a month, on the day before the batteries are to be cleaned up, these plates are

scraped for removing the hard amalgam, as follows: After the soft amalgam has been removed with a rubber scraper, as previously described, then the surface is scraped with steel scrapers, made of old files bent at right angles about 2 inches from one end and ground to a sharp edge, as shown in Fig. 75. The edge should be perfectly straight across, except at the corners where it is slightly rounded. The amalgam is nowhere entirely removed, the purpose of the scraping being merely to reduce it to a thin film. Most of the scraping is needed upon the upper part of the plates, as with the exception of a few isolated spots, the amalgam does not accumulate to much thickness below the first 8 feet. Great care is taken in using scrapers on silvered plates, as it takes but little scraping to cut the silver, which not only spoils the plates, but makes a very low grade of bullion. The amalgam removed is transferred to an enamel-lined cast-iron kettle by an amalgam scoop. The plates are next sprinkled with quicksilver and scrubbed thoroughly with a whisk broom, care being had to put quicksilver on all parts. Then the amalgam is collected again, using only a rubber and scoop to transfer it to the kettle. After going over the plate once more with a whisk broom, sprinkling a little quicksilver at the head as required, the pulp is turned on and operations are resumed. For this monthly cleaning and scraping of the twelve pairs of No. 1 sluice plates, the force required is 6 men for 4½ hours, and then 4 men for 1½ hours.

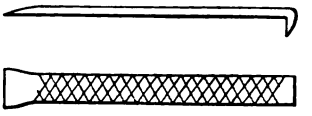

FIG. 75. — SCRAPER.

In this mill nothing is done to the 8 feet of No. 2 sluice plate except at the time of the fortnightly clean-up of the mill. At that time, the water is turned off, the stamps hung up, the plates hosed off, scraped with a steel scraper, and the amalgam removed. Next quicksilver is sprinkled on and the plates scrubbed with a whisk broom and the amalgam collected by a rubber and removed. Finally they are dressed with quicksilver and a whisk broom. The plates on the vanner distributors are dressed and cleaned every week in the same way as the sluice plates just described, except that the stamps are not hung up, but the vanner is simply stopped, and the pulp coming to it is diverted to another vanner, which, temporarily, does double work.

The preceding description covers the regular treatment of all the plates in this mill. There is, however, an additional cleaning which takes place after a plate has been in use a long time, and the silver has scoured off in spots which makes it very troublesome to keep in good condition. In this case, the plate is taken out, the soft amalgam is first removed by the rubber and put by itself, then the hard amalgam is scraped off until the copper appears, and this is put by itself. Finally a layer of the copper is scraped off, and the plate is sent to be silver plated or, if it is in very bad condition from dents and wear, it is cut up, melted into bars and sold for the gold and silver which it contains.

The general clean-up which comes perhaps twice a month, consists in cleaning out the mortar, saving the amalgam, replacing worn parts, and putting in false bottoms, if used. The time of cleaning up is apt to be determined by the amount of amalgam which collects in the battery, or where inside amalgamation is not practiced, by the life of the shoes and dies. A few examples will be given to show the variations in procedure. The first will be given in full, but of the others only the points will be given in which they differ from the first.

At the Golden Star Stamp mill the clean-up comes at the first and middle of the month. The former is carried on as follows: At quarter of seven in the morning feeding is stopped. The stamps are made to drop slowly so that at seven o'clock there is no more ore in the mortar above the screen frame. The

splash boards are removed; the stamps are hung up, the water is shut off, and the engine is stopped. The mortars on one side of the mill are then opened by removing the canvas shields, screens, and chuck blocks. The canvas shields and screens are first roughly washed by playing a hose over them. They are put aside to be more carefully cleaned later on. The six chuck blocks from the batteries facing that side of the mill which is being cleaned up, are placed on two apron plates, at each of which are 4 men to remove the amalgam, under the supervision of the head amalgamator. This is done by scraping the inside plates with a chisel. The hard amalgam drops off on the apron plate beneath. As much amalgam is removed as is possible without exposing the copper. Then quicksilver is sprinkled on the plate to dilute somewhat the remaining adhering hard amalgam. This is then spread evenly over the plate and brightened by scouring with a whisk broom and tailings, and finally smoothed with a soft paint brush. The amalgam that has dropped on the apron plate is collected at the head and put under lock and key by the head amalgamator. In this same manner the chuck blocks of the entire mill are scraped and cleaned in four sets of six each. In the mean time, another set of men scrape and wash the rim and flanges of the mortar and collect the amalgam. They also remove the amalgam from the outside plates which has settled during the past 24 hours. This is then also taken in charge by the head amalgamator. The dressing of the outside plates does not take place as yet. In order to keep them soft, a little quicksilver is sprinkled over them and evenly distributed with the brush. A third set of men begins with the work on the mortar as soon as the amalgam from the apron plate has been removed. Two small platforms are placed at its head on the wooden frame for the men to stand on. They then remove the water still remaining in the mortar and shovel out the sands above the dies into a heap on the apron plate (as these sands consist simply of coarse ore and do not contain any amalgam, they are returned to the battery after the dies have been put again in place). Before the die can be taken out, the stamp has to be raised higher by an iron bar which has its fulcrum on a cross piece resting on the supports for the splash board. To keep it up, a 4-inch block is placed on the finger bar. The dies are pried up with an iron bar, lifted out, and roughly cleaned. Those which are to be exchanged are taken away and piled up to be carefully scraped and washed in due time. Those that are still good are returned to the mortar without further cleaning. After the dies have been taken out, the remaining sand, which is rich in amalgam and contains pieces of iron that have accumulated in the mortar, is shoveled out and piled up in a convenient place to be treated separately in the rocker and the pan. Any particles of amalgam that have adhered to the rough sides of the mortar are removed and added to the sands. The dies are now put in place again. If new shoes are required, they are put on. Then the recesses for the chuck block, screen frame, etc., are cleaned by directing a hose upon them, and these are put in place, the screens having first been cleaned in a wooden box with brush and water. When the chuck block is in place the sands first removed are shoveled in to fill the bottom of the mortar, up to the top of the dies. Tappets are set as previously described. When the engine has been started up, the stamps that have new shoes are first allowed to drop several times until the shoe is firmly fastened to the head. The splash boards are put back into place, ore is fed into the mortar, the water is turned on, and the stamps of one battery after another are let down from the finger bars. Special care has to be taken by the feeders to regulate the ore supply, as the mortars are empty above the dies when the mill starts up. The total time required to clean up this 120-stamp mill is 7 hours, employing both the night and day shift. After the clean-up is over, the bottom sands are treated in a rocker. Any coarse

pieces of iron are picked up and collected in a separate heap. When the sands have been rocked for a little while and the hose has been played on them, the residue on the hopper is broken up as fine as possible with a wooden mallet. The products obtained by rocking are: (1) The coarse particles remaining finally in the hopper; these are washed in a coarse screen over the clean-up pan and any amalgam remaining on the screen is picked out and thrown into the pan, while the residue goes back to the battery. (2) The heavy sands that collect on the curtain and riffle, which are taken up in a bucket to be worked in the pan. (3) The sands settling in the sluice which conducts the slimes to the waste flume, which are shoveled out and returned to the battery. All amalgam goes to clean-up pan. The pieces of iron that are picked out from the sands in the bottom of the mortar are first scraped to remove any amalgam adhering to them; they are then thrown out upon a heap in the yard and left there to be corroded by atmospheric action. The rusting is hastened by adding salt to the heap at various times. Once a year the iron that has entirely fallen to pieces is charged with quicksilver into the pan and its gold extracted. At the middle of the month the clean-up is much simpler, as only the chuck blocks are taken out and the mortar is left intact, except, of course, when any break has occurred in shoe or die.

§ 169. THE EFFECT OF TEMPERATURE ON AMALGAMATION. — The amalgam on plates appears to be affected by temperature along the following lines: (1) Attraction of mercury for gold. (2) The cohesive power of mercury as shown by coalescence of its globules. (3) The consistency of the amalgam on the plate (hard or soft). (4) Percentage of gold in amalgam after squeezing. (5) The solution of salts of metals in the mill water, causing the possible deposition of metals into the amalgam and the effect of the same upon the amalgam.

Within the comparatively small range which occurs in mills, probably seldom above 100° F., and never below 32° F., the variation in the attraction of mercury for gold is so slight as to be of little consequence.

Regarding the cohesive power of mercury, W. F. Drake states that at a low temperature this is lost to a considerable extent. This may be shown by placing two portions of broken up mercury in a cold and warm dish respectively; that in the warm dish will be found to unite very much more easily than that in the cold.

The higher the temperature the more fluid will amalgam be and the more liable to run off the plates. At the mill of the Twelve Apostles Gold Mining Co., in Transylvania, Von Dessauer notes that it is not the actual temperature whether high or low, that is injurious to amalgamation, but rather the sudden changes in temperature. By cutting down the amount of mercury fed to the battery and gauging the amount entirely by the "feel" of the plates, it is possible to have the amalgam of the same consistency in the summer as in the winter, and prevent entirely any serious flowing of amalgam. In spring and autumn, however, when the mill water was much warmer in the day time than in the night, the amalgam would flow down during the day into the traps and even beyond, and it was impossible to so regulate the mercury as to keep up with the change. He further notes that the percentage extraction of gold from the ore in winter is scarcely different from that in summer. Sharpless reports that at the Virginia mill near Merced, California, the amalgam on silver-plated copper plates began to harden up as the water became warm and the amalgam became very hard, forming a crystalline or granular alloy that could be removed only by a scraper. As the water became warmer the difficulty increased, so that starting with plates saturated with mercury, after an hour the upper four feet would be as hard and dry as if no mercury had been used and mercury would be running off the lower end into the traps. Finally, with

the water at 83° F., he hung up the stamps, scraped the plates, put on a layer of wood ashes, covered with cool, damp sand. After two days the plates were in normal condition. Sharpless's experience is in direct conflict with that of Von Dessauer and may possibly have been due to the use of too much mercury, which is recognized by some mill men as a cause of hard amalgam. As long as the weather was cool, the amalgam remained pasty but the advent of warm weather caused fluid mercury to separate out and run off, leaving hard amalgam behind. He was troubled about the same time with a lime crust ($CaCO_3$) upon his plates. On the other hand, W. F. Drake found (name of mill not given), that by heating the battery water to 80° or 90° F., the maximum saving of gold was obtained, as shown by assays of tailings and slimes.

The effect of increased temperature is to raise the percentage of gold in solid amalgam after squeezing. Von Dessauer found in the case previously cited that with a winter temperature of 34° to 36° F., the amalgam left after squeezing out the liquid contained only 7 to 10% gold, while with a summer temperature of 80° to 90° F., it contained 25 to 35% gold. There is required, therefore, three or four times as much mercury in winter as in summer.

Regarding the solution of salts, deposition in the amalgam and effect of the same upon its consistency, J. A. Sanborn advances the theory that since the heating of water increases the solubility of certain metallic salts it may cause harmful results upon imperfectly coated copper plates. Iron from the stamp shoes may deposit in the amalgam a metal that is electro-negative to iron. For example, a salt of copper, lead, or perhaps arsenic would deposit some of its metal in the amalgam in the presence of iron, and this may be the cause of some of the conflicting reports that have come from some of the authorities. Many of the mills heat the battery water in the winter by means of steam coils placed in the water tank.

§ 170. MERCURY TRAPS. — There are numerous forms of mercury traps found in the mills. One of the most efficient of these is shown in Fig. 76.

The Black Hills trap, shown in Fig. 76, consists of two adjustable gates and one dam, all of wrought iron and sliding in grooves in a rectangular wooden box. The pulp enters the box at the feed end, passes down under the first gate, up over the dam, down under the second gate, and finally up over the overflow, which is considerably below the level of the feed. The trap is 48 inches long, 14 inches wide, and 48 inches deep. The gates are all 3 inches above the bottom. The dams are 1½, 3, and 4 inches respectively below the top and the overflow is 6 inches below the top. In cleaning Black Hills traps, the gates and dams are all taken out. The material recovered from the traps is treated similarly to the battery residue.

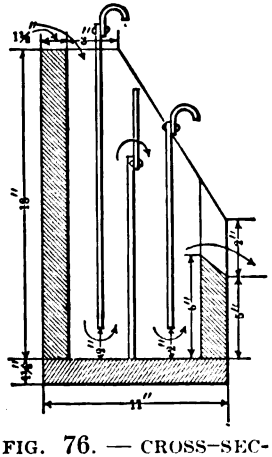

FIG. 76. — CROSS-SECTION OF A BLACK HILLS TRAP.

§ 171. CLEAN-UP BARRELS. — "In cleaning up the mortars and mercury traps of gold stamp mills, much valuable amalgam is found mixed with quartz, iron, and other foreign matter. These cleanings, upon being placed in the clean-up barrel, with additional quicksilver and cast-iron balls, are thoroughly ground and worked, the amalgam being taken up by the quicksilver and separated from the waste matter."

They work intermittently, receiving a charge, grinding it for a specified time and later discharging it. They are ball mills consisting of plain iron cylinders revolving on horizontal axes. (See Fig. 77.) Heads carrying the trun-

nions or journals are bolted to the flanged ends of the cylinders. They are sometimes driven by direct pulleys, sometimes by pinion and gear. They are generally provided with a manhole on one side and a hand hole on the other. Both are closed by covers flush with the inner surface of the cylinder, made tight with rubber gaskets, and held in place by screw clamps. Sometimes one opening only is used. A few large spherical balls of chilled-cast iron are used. A barrel requires 2½ horse-power when running at 30 revolutions per minute.

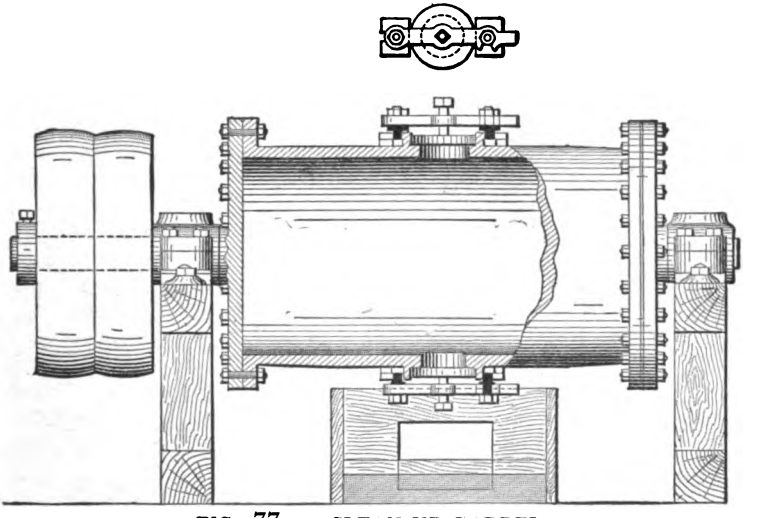

FIG. 77. — CLEAN-UP BARREL.

The discharging is done by opening the manhole when on top. Water is run in with a hose to flush out the finest of the mud to a catch hopper beneath. The water is then stopped and the 1¾-inch hole at the bottom is then opened. The amalgam and pulp are drawn off into buckets which go to the clean-up room. The catch hopper takes the overflow of these buckets. A man then enters the barrel, lifts out the balls, hoses out as much fine pyrite as possible into the bucket below, and finally, scrapes out all the scrap iron.

The economical importance of a clean-up barrel is frequently lost sight of in a stamp mill. By its use it is possible to save a remarkable amount of gold which would otherwise go to waste. Among the things treated by it are: (1) Old screens and pieces of scrap iron from the mortars which are first allowed to rust to pieces; (2) old straining cloths, brooms, chips, etc., which are burned and their ashes treated; (3) the sweepings and drainings of the mill, accumulated dust, flue dust, etc. Loring states that many thousand dollars may be saved in this way around a large plant.

§ 172. CLEAN-UP PAN. — The clean-up pan (see Fig. 78), is a small-sized pan in which the sides, bottom, and central cone are commonly all made in one casting, the bottom being very thick to take the wear. To the revolving spider or driving cone are screwed hard-wood blocks (see Fig. 78), which are well adapted to give the gentle trituration, the special need for which will be referred to later. A replaceable die ring is sometimes used. As the charge does not rise above the muller no attempt to obtain a systematic pulp current is made. In other respects the clean-up pan is constructed and mounted much like an amalgamating pan. Another form of clean-up pan substitutes two rotating arms and two drag-stones for the spider and wooden blocks.

Amalgam obtained in a gold mill may contain particles of so-called rusty gold, that is, gold which is more or less coated with some sulphide, arsenide, or iron oxide. The stamping process has cleaned it enough so that one corner is amalgamated and it has therefore been caught. It may contain particles of pyrites including minute specks of gold which are amalgamated and caught as above. It may contain simply enclosed within it, black sand, magnetite, etc., cast iron, and graphitic particles from the wear of the mill. All of these

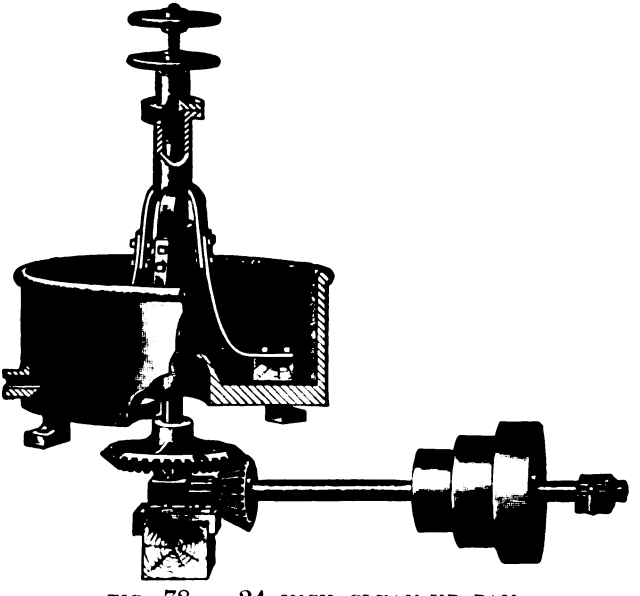

FIG. 78. — 24-INCH CLEAN-UP PAN.

substances make the amalgam impure and would bring down the fineness of the gold brick, or carry gold into the slag during the melting. The clean-up pan subjects amalgam to a grinding action which is not severe enough to flour the quicksilver, but cracks the shells off the gold particles and uncovers the iron, graphite, magnetite, etc., and yields: (1) Clean amaglam; (2) mud. The amalgam is strained, retorted, melted to a brick. The mud can be settled in a tank, and when enough of it is had, sampled, assayed, and if rich enough, shipped to smelting works. In wet or dry silver mills, mineral enclosures and partially amalgamated particles may also be obtained. The clean-up pan here also refines the amalgam as above.

§ 173. CLEANING AMALGAM. — The amalgam which is obtained from the plates and the mortar, is more or less dirty from the presence of sand, fine sulphurets or iron, and base metal amalgam. The plate amalgam is generally cleaned separately from the battery amalgam, but the procedure is much the same in both cases. The sand and iron may be removed by washing in small batches in a gold pan, and the removal of fine sulphurets and base metal amalgam may be done by repeated grinding in either a Wedgewood or a muller mortar, with an addition of quicksilver and warm water, which brings them to the surface, whence they are skimmed off. Pouring from one dish to another will cause impurities to rise. Instead of by gold pans and mortars, the amalgam is frequently cleaned mechanically in a clean-up barrel or a clean-up pan and the skimmings may be re-ground and finally cleaned with a little

cyanide of potassium, or where mostly base metal amalgam, they may be retorted separately and the residue melted repeatedly with nitre and borax to get a gold button.

§ 174. SQUEEZING AMALGAM. — The cleaned amalgam is next squeezed through buckskin, chamois skin, closely woven drilling, or fine canvas (cotton duck), all of which may or may not have been thoroughly wetted with water. The cloth or leather is laid over a vessel and the amalgam put in the center. The squeezing is done by gathering up the free ends and twisting, generally under cold water, so as to compress the amalgam and at the same time squeezing it with the hand.

Fig. 79 shows a hydraulic amalgam press that is used in large mills when considerable amounts of amalgam have to be handled daily. The amalgam is placed in a canvas bag and the bag is then placed in the lower cylinder (1), the sides of which are perforated. The ram is operated by a four-way valve (2). The mercury is squeezed through the canvas bag and the perforations in (1). This press may also be operated by steam or compressed air.

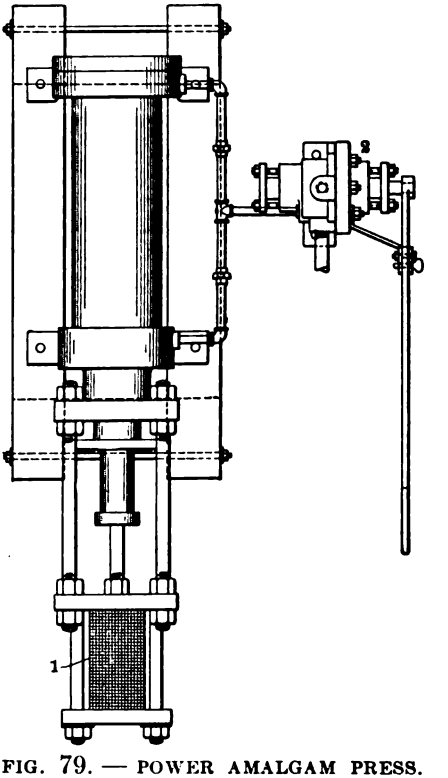

FIG. 79. — POWER AMALGAM PRESS.

§ 175. RETORTING AMALGAM. — Retorts are of cast iron and are of two kinds: (1) the cylindrical retort which is mounted horizontally in a fixed position in a furnace and is shown in Fig. 80, and (2) the pot retorts of various sizes, which are usually smaller than the cylindrical form and have no fixed furnace but are temporarily set into a pot furnace or over a blacksmith's forge or simply have a fire built beneath them. A pot retort is shown in Fig. 81. Both forms have a delivery pipe which leads to a Liebig condenser. A cover or a door is provided which can be luted on tight. Retorts are smooth inside and in pot retorts before putting in amalgam, to prevent sticking, the inside walls should be coated with chalk or whitening or a thin paste of ground fire clay and graphite. Paper is sometimes used, which chars and makes a coating. The retorts are luted with a paste made from finely pulverized oak ashes. Cylindrical retorts have semi-cylindrical trays in them in which the amalgam is placed, while in pot retorts the amalgam is placed directly into the retort and left loose or rammed down by a rod having a nut on the end, so that the retort is not over three-fourths full. It is well to make a vent hole for the mercury vapor down the center. Louis recommends that a disc of asbestos board be placed on the amalgam to prevent spirting. After the amalgam is all in the retort tightly sealed, the fire is started and the retort gradually heated. Care should be had to apply only a moderate heat at first, just enough to cause the mercury to distill over gently. Too high a heat at the start will cause more mercury to be retained in the end. The mercury vapor passes over, is condensed and discharged into a vessel of

water. The discharge pipe should dip but slightly into the water in order that there may be no danger of an explosion from water being sucked back if the retort cools. To avoid dipping the pipe into the water, a gunny sack extension to the pipe may dip in the water and will at the same time prevent both explosion and salivation of attendant. At the end, when the mercury has ceased to come over, the heat should be raised to redness for a few minutes to drive off as much mercury as possible, and then the retort left to cool before being opened. The residue usually separates easily from the retort or, if not, a chisel and hammer are necessary.

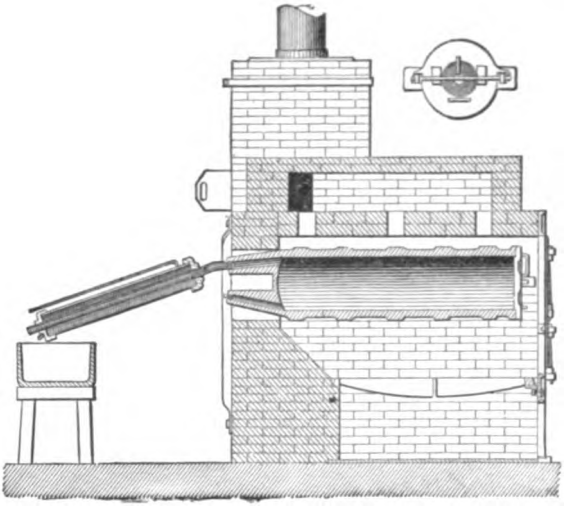

FIG. 80. — SECTION OF CYLINDRICAL RETORT AND FURNACE.

Wood is the best fuel. Retorts are not long lived. If the last 1 or 1½% of mercury is to be driven off, a white heat is necessary, which melts part of the bullion and at the same time causes the iron to become bent and burnt out. Cylindrical retorts should be made so as to be turned from time to time to expose new surfaces to the fire, and should be well supported to prolong their life. Warping and burning of the iron also occur where a cherry red temperature is used.

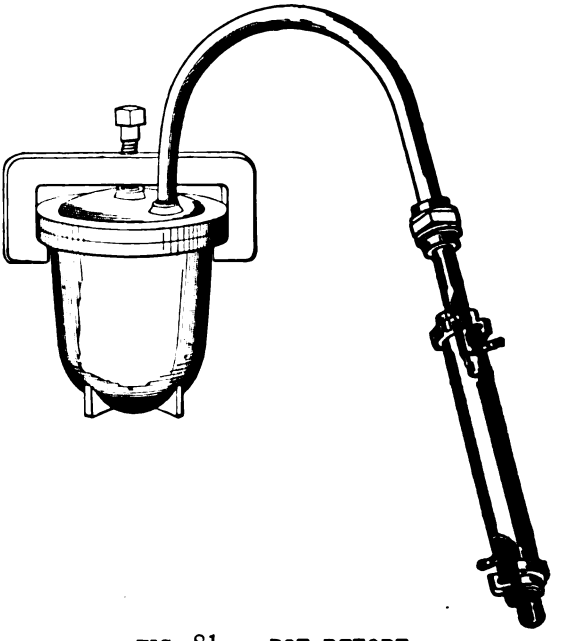

FIG. 81. — POT RETORT.

The retort residue contains, in addition to gold and silver, base metals (chiefly lead, copper, arsenic, and antimony), which were not removed at the time of cleaning the amalgam and were not volatilized. It also contains, according to Rose, at least 0.1% mercury, which can be driven off only by melting. This seems a very low figure to the author. The amount of base metals in the residue will vary with the conditions, such as the kind of ore, the purity of the water, the care taken not to scrape plates to bare copper, and the care in cleaning amalgam.

§ 176. MELTING. — The residue left in the retort is taken out, cut up, if necessary, and melted in a graphite crucible in a pot furnace. Before a graphite

crucible is used for the first time it should be annealed by drying it thoroughly and then gradually heating it upside down until it is red hot. Louis recommends good clay, or, better, Salamander crucibles, especially where fluxes are to be used, as the latter cut the graphite crucibles badly. The diameter of the furnace should be at least 5 or 6 inches larger than the outer diameter of the crucible, and should allow of 5 inches space between the bottom of the crucible and the grate. Charcoal, or, better, coke should be used for fuel. The crucible usually rests on a brick on the grate, and is heated hot before the metal is put in. A cover is used so that the crucible is imbedded in fuel. The common fluxes used are borax, soda, nitre, and silica. The more soda used the more liquid the slag is, and the better for pouring; the more silica, the higher will be the fineness of the bullion, but the slag is more pasty and liable to contain shots. Nitre eats the crucible and is best not added until near the end of the process; its office is to oxidize copper, lead, iron, etc. Some mills add a little corrosive sublimate near the finish after the slag is skimmed off. The pouring should be delayed from two to ten minutes after its addition, until the white fumes, which are poisonous, are all off. Its action is to give off chlorine which combines with and volatilizes any arsenic or antimony present.

The slag which is formed on top may be skimmed off by passing over the surface a flat coiled rod of cold iron, or the slag may remain on and be poured with the metal into the ingot molds. Just before pouring, the contents of the crucible are well stirred with a graphite paddle. After pouring, where the slag has not been removed, as soon as the gold has set, the mold is overturned into a bucket of water when the slag will easily separate from the metal. Cast-iron ingot molds of various sizes are used which are smoked evenly by inverting over a fire of cotton waste, coal oil, and pitch or rosin and then heated. Washing with oil is often used instead of smoking. When the ingot is cold, it is sampled by taking two chips from diagonally opposite corners, and then shipped to the United States Mint or to any bullion dealer. The slag always contains more or less gold, and it is either remelted to settle out most of the shots and the partly cleaned slag sold to a smelter, or else it is run through the stamp battery along with old crucibles.

§ 177. FINENESS OF BULLION. — The ingot after melting contains gold, silver, and almost invariably a small amount of base metals, usually copper and iron. The amount of gold or silver in it is given by its fineness or number of parts in a thousand; thus to say that bullion is 800 gold fine means that out of 1,000 parts bullion, 800 parts or 80% are gold. The fineness of the bullion will vary in different mills according to the constituents of the ore and water, the condition of the plates and the care that is taken in cleaning amalgam. The average fineness of gold bullion in the mills is perhaps about 800.

§ 178. CARE AND PURIFICATION OF MERCURY. — The mercury or No. 1 amalgam that is separated by straining is generally used over again in the mill, as the small amount of gold and silver which it contains makes it a better agent for catching gold than pure mercury. If, however, it contains besides these a considerable amount of impurities, such as base metals (lead, copper, iron, bismuth, arsenic, and antimony), and their compounds, it is best to clean it before using it over. Impure mercury is easily recognized by the fact that globules are pear-shaped with tails in flowing down over a glass plate or a gold pan, and they do not unite readily. It will also leave a film on rough blotting paper, and when shaken in a bottle with dry air a black powder forms on the surface. On the other hand, pure mercury gives brighter hemispherical globules and exhibits none of the properties just mentioned. Mercury may be made somewhat brighter and livelier by the addition of sodium amalgam. Retorting at a low temperature, having the retort only half full, and using a cover 1 or

2 inches thick of charcoal powder or quicklime, will remove the most of the impurities. Charcoal powder prevents the formation of any volatile oxides, as of lead. The quicklime breaks up any sulphides or arsenides contained in commercial quicksilver, and which might distill over without being broken up.

Impurities held in suspension in mercury may be removed by allowing it to run through a cone made of two or three thicknesses of filter paper or blotting paper which has a pin hole at the apex of the cone. Small amounts of impurities may be removed by treatment with caustic potash, dilute acids, potassium cyanide, etc. This may be done by keeping the mercury covered by one of these agents and stirring occasionally, or it may fall in a thin stream or spray through a column of the agent four or five feet high. Mercury should be kept in a glass, earthenware, or porcelain lined vessel under a layer of weak potassium cyanide solution or dilute nitric acid (1 part acid to 4 of water). The mercury is drawn off from a stop cock in the bottom, as desired, and is washed with water before using. The use of two such vessels allows time for the impurities to be removed in one while mercury is being used from the other.

§ 179. Loss of Mercury. — The amount of the loss of mercury per ton of ore averages 0.339 ounces per ton of ore treated. It seems proper to sum up here the various ways in which losses may occur. The remedies, as far as known, have been previously given: (1) Flouring is the sources of the greatest loss. There will always be some floured mercury and amalgam which is in such a fine state of division that it will escape the mercury traps and go into the concentrates or the tailings. This loss is less the oftener the plates are cleaned. (2) Mercury may adhere to a bright spot on metallic particles, for example, included grains of gold, and pass beyond the traps. (3) Mercury may be lost by forming an amalgam with copper or lead, which is lighter than mercury and liable to be lost. (4) Mercury may be lost mechanically in many ways by careless handling. If spilled on the floor it divides into little globules which cannot all be recovered. The loss in this way may be reduced by handling mercury as far as possible under water, which acts as a blanket and prevents spattering. (5) In retorting, a small amount of mercury (0.1% or over), is always retained in the retort residue and is lost in melting; a small amount probably also escapes into the air. (6) The evaporation of mercury at ordinary temperatures is a hardly appreciable source of loss. (7) Under certain conditions there may be a small chemical loss. Thus sulphate of copper in the battery water may be decomposed by mercury, forming soluble sulphate of mercury and a copper amalgam. This chemical loss is a great source of loss in pan amalgamation.

§ 180. Losses of Gold in Amalgamation. — This may take place in any or all of the following ways: (1) Flotation of fine grains which do not come in contact with the mercury. Having numerous drops in the line of plates and using a small amount of water reduces this. (2) Included grains in which the gold is surrounded by gangue. Finer crushing helps to avoid this. These grains will be caught in many cases by the concentrates. (3) Rusty gold, including gold surrounded by a film of any foreign substance which prevents it from coming in contact with mercury. The remedies for this are the same as for (2). (4) Compounds of gold, such as telluride. These may be saved on the concentrating machines unless crushed too fine. (5) Sickened or floured mercury which is unable to properly attack the gold or is so fine as to be lost in the tailings and may carry gold in solution. The remedies for flouring previously given reduce the loss in this way.

Running of Stamps.

§ 181. This includes the effects of the various conditions and adjustments upon the work of stamping, with respect to quantity of ore broken, and the quality of the pulp, that is to say, whether it is coarse or fine, and lastly, the efficiency of the battery amalgamation. In all the stamping problems, the machine will either be adjusted so as to put through the greatest amount of rock, making the minimum of slimes, or it will be adjusted to stamp finely, making a large percentage of slimes, sacrificing quantity somewhat to obtain that end. The adjustments will now be taken up and discussed individually.

§ 182. Kind of Ore. — The harder and tougher the ore, the slower will be the crushing; the softer and more friable or granular it is, the more rapid. Very clayey ores tend to impede crushing.

§ 183. The Size of Feed. — The smaller the lump, the more rapid will be the stamping, until it is so fine as to be unstable upon the die. A layer of rock one grain deep is the most efficient arrangement for any size, because it is struck direct by the shoe and cannot change its form without fracture. If the layers are several grains deep, they constitute a mass of particles which can yield to change of form with diminished amount of fracture.

Practically, however, there is a minimum thickness of layer below which the safety of the die would be imperiled. This thickness would be greater with a heavier stamp or high-drop stamps, but an average would be about 1 inch. Hence, in wet crushing it seems clear that the most efficient size of feed is that which corresponds to this minimum safe layer, and since preliminary crushing by breaker is much cheaper than by stamps (less than one-fifth the cost, according to Louis), the diminished cost is a strong argument for feeding the stamps with this small size. In dry crushing the conditions are different and the limit will be lower, say $\frac{3}{4}$ inch, or less. Some authorities claim smaller size than 1-inch diameter as that suitable for feeding stamps. For example, Louis places it at $\frac{3}{4}$ inch and states that it may even be economy to use two breakers, one following the other, to get this. Rose recommends $\frac{1}{4}$-inch diameter for feed for light stamps, $\frac{1}{2}$-inch diameter for heavy stamps. In mill practice larger sizes than 1 inch prevail.

§ 184. Method of Feeding. — Whether it is done by hand or by automatic feeder, the feeding of the stamp is a most important element in the capacity of a mill. The attendant judges the condition of the layer of ore upon the die by taking hold of the stamp stem and following it down while it strikes the blow. If the layer of rock is too thin it will have a decided rebound; if too thick, it will strike with a dull, sinking blow; if right, it will strike a sharp, hard blow with hardly an indication of a rebound. It is this blow which stamps the most rock in 24 hours, and it is well worth the expense to employ enough intelligent men to tend the feeders closely in order to attain this end.

§ 185. Mercury Fed to Battery. — There seems to be a number of reasons in favor of feeding mercury to the battery. Some of them will be brought out in the following discussion: A nugget of gold, lying on the die under a bed of sand is violently abraded by the blow of the stamp. This leaves a brightened nugget of gold of less size than before the blow and a number of fine floating particles which have been scoured from the surface of the larger nugget. If, on the other hand, the nugget is coated with quicksilver, this plastic skin greatly hinders abrasion and weights down the fine particles of gold which are abraded. As a consequence, both the nuggets and the fine particles are in better condition to be caught by the quicksilver of the inside or outside plates than if they had not been coated. Commercially, amalgam is a paste

of little nuggets of gold, each coated with quicksilver, which may or may not have penetrated to the center of the nuggets.

As to the quantity of quicksilver required, the mill practice runs from 1 ounce up to 6 ounces of quicksilver for each ounce of gold caught. The majority of the mills appear to use about 1½ ounces per ounce of gold. Inside amalgamation as a whole, that is, the use of inside plates, as well as the feeding of mercury, is used in the majority of mills, the opinion being that it is better to catch the gold as early as possible by these means, even though capacity is somewhat diminished by the higher discharge, or wider mortar required to prevent scouring of the inside plates. No rule can be laid down for the frequency of the charging or the amount of the charge of mercury for the mortar. The only safe guide is the appearance of the outside plates. If these plates are hard and the amalgam is crumbly, sufficient mercury has not been added. On the contrary, if mercury is distinctly visible on the plates, either in drops or streaks, or if patches of bright, polished plate appear, it is evident that mercury has been added too freely.

§ 186. AREA OF DISCHARGE is the total area of openings through which the water actually issues. There are two qualities of the screen which affect this: (*a*) The percentage of opening in the screen, and (*b*) the horizontal length of screen. The effect of the former upon capacity and quality of crushing has been discussed under screens. In regard to the latter, since the splash rarely exceeds 9 inches in height on the screen, the available height is nearly constant, whatever the actual height may be. This leaves the length of the screen as the measure by which the area of discharge will be increased. Greater length can be gained by cutting down the vertical bars between the panels to the narrowest safe limit, but double discharge, that is, discharging in front and behind gives the largest gain. Double discharge would seem logically to be advisable where high speed of crushing is sought. It has, however, not found favor in most mills for the following reasons: (*a*) It requires more water per ton of ore stamped, which may dilute the pulp too much for the vanners, while the capacity is only slightly increased. At Clunes, Australia, double discharge batteries use 8 to 10 gallons of water per stamp per minute for 2¾ tons of ore crushed per 24 hours, while at Ballarat, single discharge batteries use 5 gallons per minute to crush 2 tons in 24 hours per stamp. (*b*) Double discharge gives less time for battery amalgamation. (*c*) The splash or swash in the wider mortar acts less violently upon the screens, which are, therefore, more likely to clog up. (*d*) The rear screen is awkwardly situated for changing and in consequence, is liable to be neglected.

§ 187. SIZE OF HOLES IN SCREENS. — Other things being equal, the larger holes in the screen, the greater will be the capacity of the stamps, and the less will be the slimes. On the other hand, the size of the holes should be, theoretically, small enough to free the particles of gold and auriferous sulphides from the quartz; practically this can rarely be done; we simply approach nearer to the desired condition the finer we crush. Just where the limit should be, will be found out only by experiment. Thus, in one of the mills a trial of a finer screen (24 mesh), slightly increased the yield of free gold and also slightly reduced the loss of the same in the tailings, but at the same time, the value of the concentrates was reduced and the loss of concentrates in the tailings was increased. As this netted about the same total loss per ton in the tailings, coarser crushing produced the best results, all things considered.

The fineness of the screen affects the amount of attrition of the gold particles. A particle of gold resting upon the die is powerfully abraded by the quartz as the stamp falls upon the latter; the longer the gold nugget remains upon the die the greater the abrasion. The abrasion helps extraction to the

extent that it brightens the gold nugget, but the fine gold particles which are abraded, although bright, are yet so light as to be caught with difficulty. It follows that the fine screens may overdo the limit of good work when the gold is coarse.

§ 188. HEIGHT OF DISCHARGE. — By this is meant the height of the top of the chuck block or of the lower bar of the screen frame above the surface of the die. It will be seen that as the die wears, the height of discharge will increase. For uniformity of work it is important that this height should be kept constant. To do this, four methods are used: (1) By replacing a higher by a lower chuck block. (2) By reversing the screen frame, to replace the wide bar by the narrower. (3) By removing slats from the screens either outside or inside. (4) By raising the die by false bottoms.

Height of discharge affects both the quantity crushed and the quality of the crushed pulp, probably more than any other one thing. Low discharge is rapid and gives great capacity, with a corresponding absence of slimes. The particles are discharged almost as soon as they are small enough to pass through the screen. High discharge is slow and gives much increased proportion of slimes. It acts, in fact, more as a hydraulic classifier, lifting over only the particles that will rise in the current produced by the feed water and the swash of the stamp. High discharge with 30-mesh screen has not infrequently been found to give 90% of pulp that would pass through 80-mesh sieve. High discharge may enable a coarse screen to be used for fine crushing and, therefore, diminish the cost of screens.

The height of the water in a battery is governed by the height of discharge and is usually from 2 to 6 inches above the top of the chuck block, although the splash may rise as high as 16 inches on the screen. It follows from this that the stamps may or may not rise above the water at every stroke. In speaking of this the author will use the words *splash* and *swash*. The splash is the effect produced when the stamp is lifted out of the water. Swash is the effect produced when it is not. The former causes a much more violent cutting action of sand and water upon the plates, screens, mortar sides, etc., than the latter. This is particularly true with a low discharge.

§ 189. ORDER OF DROP. — This is the most efficient means of distributing the rock evenly upon the dies. The blow of the stamp upon the die should be arranged to throw ore upon the adjacent dies to feed the next following stamps. The wave motion and the lengthwise swash must be evenly balanced to prevent the heaping up of the ore at one end of the mortar, leaving the die at the other end bare, thereby decreasing the capacity.

Two principles for governing the order of drop have been given by the authorities: (1) Two adjacent stamps should never fall in succession. (2) When any stamp is striking, its neighbors should be rising. We may define the orders by considering that the observer is standing behind the battery and facing it, then calling the stamps 1, 2, 3, 4, 5, numbered from the left end of the battery toward the right, the order No. 1 is 1, 3, 5, 2, 4, by which is meant that No. 1 or left-hand stamp drops first, No. 3 or middle stamp second, No. 5, or right-hand stamp third, and so on, or, numbered backward, that is, from right to left 1, 4, 2, 5, 3. This satisfies both the above principles. The order No. 2, is 1, 5, 2, 4, 3, or, numbered backward, 1, 4, 2, 3, 5, and does not quite fulfil either principle, but it theoretically follows the principles more nearly than any other except No. 1. On the other hand, No. 2 seems to give a more symmetrical treatment of the whole battery than No. 1.

The orders most frequently adopted in California are 1, 5, 2, 4, 3; 1, 3, 5, 2, 4; 3, 5, 1, 4, 2 ; and 1, 4, 2, 5, 3. Figs. 56*a* and *b* show the usual order of drop in the case of a 10-stamp battery and the arrangement of cams

required. In Fig. 56*a* the row of figures marked "order of drop" indicates the sequence in which the stamps drop. With reference to the lower row of figures, the order of drop is thus: 1, 6, 3, 8, 5, 10, 2, 7, 4, 9. It will be noted in this cut that stamps 1, 2, 3, 4, and 5 have left-hand cams, while the other five are right hand. This is done so that, the lateral thrusts upon one side of the cam shaft may be compensated by an equal and opposite thrust upon the other side of the same shaft.

§ 190. NUMBER OF DROPS AND HEIGHT OF DROP. — There are two practices, known as the California and the Colorado practices. The California mill uses a short drop and runs its cam shaft as fast as it can without danger that the rising cam shall strike the falling tappet. They run from 80 to 110 drops per minute and 5 to 9 inches drop. The Colorado mill (chiefly in Gilpin County), uses a high drop, which necessitates fewer drops per minute. They use 16 to 20-inch drop and run 26 to 32 drops per minute.

As a general principle, the greater the number of drops per minute of a given stamp, the greater the quantity of ore crushed, also the higher the drop, the greater the capacity. These two principles, however, conflict with each other. If many drops are sought, the height of drop must be small, else the falling tappet will strike the rising cam. The California practice is the result of pushing for many drops; the Colorado, for high drop.

§ 191. LIMITS DUE TO POWER. — D. B. Morison has by the use of an indicator, showing the complete cycle of velocity of a stamp, lately made an investigation which throws a great deal of light upon the number and height of drops possible, and, at the same time, upon the diameter of the inscribing circle. His indicator consisted of a drum 7 inches in diameter, revolving with uniform velocity. The recording pencil, running between vertical guides, was attached to a washer on the stamp stem, this washer being loose and held in position by collars above and below. The battery had 900-pound stamps and Sandycroft standard cams, and was run a week to establish practical conditions before the tests were made.

TABLE 33. — ANALYSIS OF D. B. MORISON'S CURVES OF THE VELOCITY OF STAMPS.

Morison's Plate No.	Drops per Minute.	Height of Drop.	Ascent with Uniform Velocity A-B.			Ascent with Retarding Velocity B-C.		Time of Uniformly Accelerated Descent C-D.	Time of Rebound D-E	Time of Repose E-A.	Total Time of Cycle.
			Time.	Height.	Velocity per Second.	Time.	Height.				
		Inches.	Seconds.	Inches.	Inches.	Seconds.	Inches.	Seconds.	Seconds.	Seconds.	Seconds.
9	82	6½	0.23	6.32	27.5	0.06	0.5	0.2	0.11	0.12	0.715
10	88	6½	0.22	6.2	28.2	0.07*	0.84*	0.21	0.10	0.085	0.68
11	97	6½	0.212	6.76	31.9	0 05	0.43	0.20	0.092	0.06	0.615
12	80	8	0.284	7.64	26.9	0.06	0.56	0.23	0.125	0.05	0.75
13	84	8	0.278	7.8	28.1	0.057	0.54	0.225	0.052	0.10	0.71
14	93	8	0.275	8.12	29.5	0.048	0.48	0.222	0.100	0.00	0.645

* These figures are so out of the harmony with the others that they have been thrown out in the computations.

TABLE 34. — COMPUTED DROPS PER MINUTE AND DIAMETERS OF INSCRIBING CIRCLES FOR VARYING HEIGHT OF DROP.

Height of drop in inches	3.	4.	5.	6.	7.	8.	9.	10.	14.	18.
Time for ascent with uniform velocity in seconds	.078	.110	.141	.172	.204	.235	.266	.298	.423	.549
Time for ascent with retarded velocity in seconds	.055	.055	.055	.055	.055	.055	.055	.055	.055	.055
Total time for descent in seconds	.135	.158	.175	.192	.206	.217	.231	.244	.288	.326
Total time for rebound and repose in seconds	.150	.150	.150	.150	.150	.150	.150	.150	.150	.150
Drops per minute	143.5	126.8	115.2	105.4	97.6	91.3	85.5	80.3	65.5	55.6
Diameter of inscribing circle in inches	6.00	7.30	8.46	9.57	10.58	11.54	12.53	13.47	17.08	20.49

Table 33 shows the results obtained by analyzing and measuring his six

indicator cards, of which two are given in Figs. 82 and 83. The cycle in Fig. 82, for example may be thus stated; At *A*, the condition of the stamp is changed in an instant from repose to full velocity upward. The stamp then continues from *A* to *B* at uniform velocity. From *B* to C its upward velocity decreases to zero by uniformly retarded motion. From *C* to *D* the stamp falls with

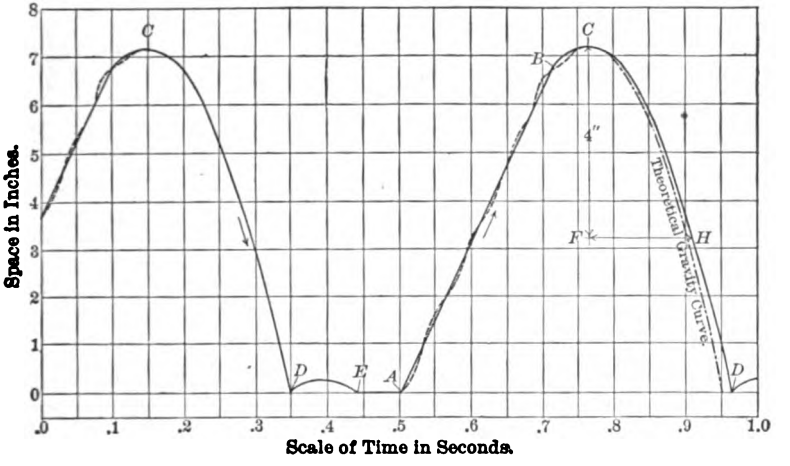

FIG. 82. — STAMP CARD, WITH TAPPET SET TO GIVE 6½ INCHES LIFT — WET CRUSHING. — DROPS PER MINUTE = 97.

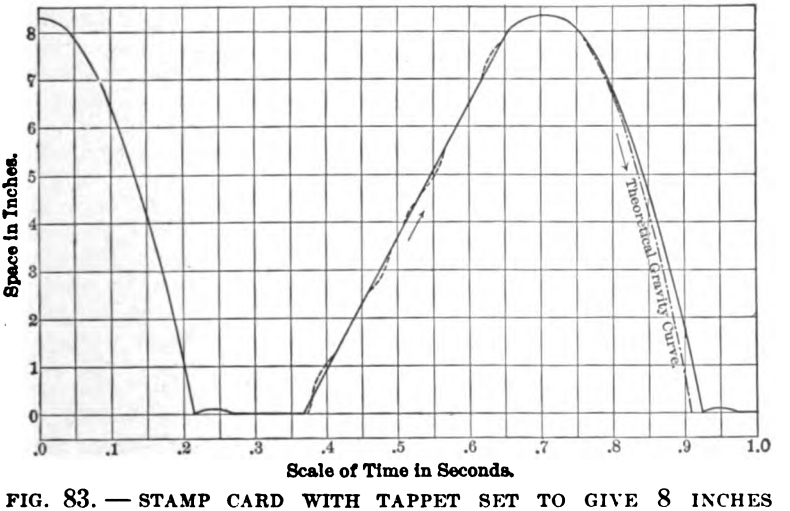

FIG. 83. — STAMP CARD WITH TAPPET SET TO GIVE 8 INCHES LIFT. — WET CRUSHING. — DROPS PER MINUTE = 84.

approximately uniformly accelerated velocity. At *D* it strikes the blow on the quartz and rebounds from *D* to *E*, and finally, the stamp is in repose from *E* to *A*. The dotted line from *A* to *B* is the actual line traced by the pencil and shows irregularities due to vibrations of the mill. The straight black line is what it would have been if those vibrations had not existed. The dot and dash line on the descending side, is put in to compare the actual path of the stamp with that of a body falling in a vacuum.

From Table 33 we may conclude that 31.9 inches per second is a maximum safe lifting velocity; that 0.055 second and 0.5 inch are the time and height respectively of retardation corresponding to this velocity; that 0.150 second is a sufficient total time to allow for rebound and repose, in order that the rising cam may not strike a falling tappet. Using these figures, we can compute the maximum number of drops possible for any given height of drop. The values in Table 34 have been computed thus: With a lift of 4 inches, for example, there will be 0.5 inch of retardation at the end of the lift, leaving 3.5 inches of uniform ascending velocity. Dividing this 3.5 inches by 31.9 inches per second, we get 0.110 second consumed in lifting the stamp at uniform velocity. The time for retardation is 0.055 second, as assumed. The total time of descent is measured on the card (see Fig. 82), from F to H, and is 0.158 second. The time for rebound and repose is 0.150 second, as assumed. The sum of all these is 0.473 second and is the total time of one cycle. Dividing 60 by 0.473 we get 126.8 as the number of drops per minute that is possible for a 4-inch drop. The diameter of the inscribing circle is obtained by the following proportion, based on the fact that the height of lift is equal to the string unwound. (See Fig. 59.)

$$0.110 + 0.055 : 0.473 = 4 \text{ inches} : x$$

$x = 11.47$ inches as the semi-circumference of the inscribing circle. The diameter is $\frac{2 \times 11.47}{3.1416} = 7.30$ inches.

The figures for the other heights of drop were computed in the same way except that for those above 8 inches, the time for descent was obtained by multiplying the theoretical time of fall for the drop in a vacuum by 1.07, an average factor obtained from several comparisons on the diagrams of the actual and theoretical curves.

This table is based upon 31.9 inches per second velocity as the maximum safe speed of lifting a stamp, and a speed that should be maintained to waste the least time. It is clear from the figures, that to maintain this condition, the diameter of the inscribing circle *must* be exactly suited to the height of drop and speed. In doing this, however, for average stamps of 850 pounds weight, with height of drop less than the dividing limit of 7-inch drop, it is impossible to use the first part of the curve, because the sum of the radii of the cam shaft and stamp stem, and of clearance will be greater than the radius of the inscribing circle. There are, then, two courses possible: (*a*) to use a large inscribing circle with a shortened cam; (*b*) to reduce the sizes and weights of the parts so that the curve from the correct inscribing circle can be used. Considering, for example, a 4-inch drop, the second method allows of the theoretical 123 drops per minute, but cuts down the weights of the parts to where the stamp would probably be of no practical use. The first method is the only alternative, but it is impossible to get the theoretical 123 drops per minute without greatly overstepping the 31.9 inches per second maximum safe lifting velocity.

§ 192. Limits of Speed and Height of Drop Due to the Mortar. — Besides the limits due to the mechanism, there is an upper and lower limit due to conditions in the mortar. If the drop is too low, the die may not be covered by ore preparatory to the next stroke. If too high, an unreasonable wear on the dies will take place, unless a harmful thickness of layer is used on the die.

The rapid drop has the indirect effect of increasing capacity by creating a more violent swash of the water which holds the fine stuff in suspension and enables the water to carry it out of the battery.

Banking, particularly at the end of the mortar, may be prevented upon

a given die by increasing the height of the corresponding stamp or the effectiveness of the swash to discharge through the screen may be increased by varying the drop of a particular stamp.

§ 193. WEIGHT OF STAMPS AND EFFECTIVENESS OF BLOW. — Closely connected with height of drop and number of drops in considering the efficiency of stamps, is the weight of the stamp. As a general rule, we may say the crushing capacity of a single blow increases almost directly as the weight of the stamp when speed, height, etc., remain unchanged.

The effectiveness of the blow can be stated for comparison in two ways: (*a*) as pounds weight of stamp per square inch of die, and (*b*) as foot pounds per square inch, in which the element of height is included. The second method, which is by far the better, is obtained by multiplying the weight of the stamp in pounds, w, by the drop in inches, h, and dividing the product by 12 times the area of the shoe in square inches, a, which is stated by the fraction $\frac{w \times h}{12 \times a}$. This value is equal to $\frac{w\, v^2}{64.4\, a}$ where v is the velocity in feet per second that the stamp would acquire if it fell freely in a vacuum. The stamp never quite delivers the energy indicated, because the velocity falls a little short of the theoretical on account of the friction of the guides and water.

Louis calls attention to the fact that the work required to lift a stamp weighing W pounds through a height H feet, is WH foot pounds, while the momentum of a falling stamp is $WV = W\sqrt{64.4H}$. Therefore the work of lifting varies as the height, while the work given out by the blow varies as the square root of the height. In consequence, the most economical way of employing power in a stamp mill is by making the weight as great, and the height of drop as small, as is consistent with convenience in practice. It will be seen that this is borne out in mill design.

The difficulty with the heavy stamps lies in the fact that the frame must be built extremely strong to resist vibration, and the expense increases out of proportion to the increased duty of the stamp.

The difficulty with extremely light stamps is that they do little work unless given high drop, and if given high drop, the drops per minute must be much reduced to prevent the rising cam from striking the falling tappet and hence, the advantage is lost.

In South Africa, where the aim is not to get the maximum extraction by amalgamation, but rather to combine amalgamation with cyaniding and at the same time to use such stamps as will give the maximum crushing capacity, crushing no finer than is necessary for the cyaniding, the practice in the recently built mills is to use heavy stamps, weighing from 1,100 to 1,250 pounds and even heavier.

Table 35 shows a number of instances of modern stamp mill practice giving the weights of stamps and other details.

TABLE 35. — MODERN STAMP MILL PRACTICE.

Weight of Stamps Used. Pounds.	Number of Drops per Minute.	Height of Drop. Inches.	Height of Discharge. Inches.	Screen Opening. Inch.	Capacity per Stamp per 24 Hours.	Gallons Water per Stamp per 24 Hours.
1,050	95–98	5.5–8	4	0.0235	3.875	5
950	98	7–7.5	6	0.030	2.8–3	.....
750	90	6	3	0.0148	2.5	3½
850	100	7	2–4	0.0355	4.4	.....
900	88	10.5	11	0.022	4	7–8
1,550	.....	.....	.....	.....	9.02	.....
1,250	.....	.....	.....	.....	4.7	.....
1,550	.....	.....	.....	.....	.....	.....
1,670	.....	.....	.....	.....	6	.....
1 050	96	8	.....	.....	.....	.....
1,050	100	6.5–7.5	3	0.025	4.09	.....
1,047	104	6.5	3	0.040	4 84	.....
1,065	100	7.5	3	0.025	4.25	.....
1,500	.....	.....	.....	0.0197	8–9.5	10–11½

§ 194. POWER FOR STAMPS. — Fig. 84 shows at a glance the approximate power required to run a 10-stamp battery at 90 drops a minute for stamps weighing from 500 to 1,200 pounds and drops varying from 6 to 10 inches. This plot takes into account the friction of moving parts. The following formula may also be of advantage.

$$\text{horse-power} = \frac{\text{weight of stamp} \times \text{drop in feet} \times \text{drops per minute} \times 1.27}{33{,}000}.$$

§ 195. COST OF CRUSHING BY STAMPS. — It is impossible to give a general figure to cover all cases, but the various items of cost can be discussed one by one, and the effect upon them of varying conditions can be shown. The figures are intended to cover merely the cost of stamping and amalgamating without including the preliminary rock breaking or subsequent concentration. The items are as follows:

(*a*) *Interest, Taxes, Insurance, and Depreciation.* — Assuming $300 per stamp as the cost of a battery, not including cost of transportation, and allowing 10% per year for the above charges, also assuming the duty of one stamp as 2.7 tons per 24 hours, running 350 days per year, then the cost per ton crushed is 3.172 cents, which would be increased by an amount depending on the cost of transporting the machinery to the mill site.

(*b*) *Power.* — An average of 26 mills gives 1.83 tons of ore stamped per 24 hours per horse-power. Using 13 cents as the cost of a horse-power per 24 hours, the cost per ton becomes 7.136 cents.

(*c*) *Wearing Parts.* — Average cost for shoes and dies in 14 mills is 5.030 cents per ton.

Average cost for screens in 15 mills is 1.233 cents per ton.

Cost of mortar linings estimated at 0.5 cent per ton.

Average cost for bosses in 13 mills is 0.399 cent per ton.

Cost of stems, estimated at 0.276 cent per ton.

Average cost for tappets in 9 mills is 0.556 cent per ton.

Average cost for cams in 7 mills is 0.303 cent per ton.

Cost for guides, belts, etc., may be estimated at 1.000 cent per ton.

(*d*) *Mercury Consumed.* — Seventeen mills give figures ranging from 0.07 to 8.00 ounces per ton. Omitting the latter amount, which is far above all the others, the average is 0.339 ounces per ton. With mercury at $40 per flask (76.5 pounds), this amounts to 1.107 cents per ton. J. Hays Hammond states that the loss of mercury is ½ ounce per ton on an average. This amounts to 1.634 cents per ton with mercury at $40 per flask.

(*e*) *Labor.* — Figures from 12 mills range from 3.2 cents to 13.6 cents per

ton. The average is 7.909 cents per ton. If hand feeding is used, it greatly increases the cost for labor.

(*f*) *Water Used.* — The average water used in the mills is 6.68 tons per ton of ore. The cost varies greatly in different mills. In mills which use mine water, the cost is counted as nothing, being charged off as mining expense. At four mills water costs 30 cents, 18 cents, 20 cents, and 20 cents respectively,

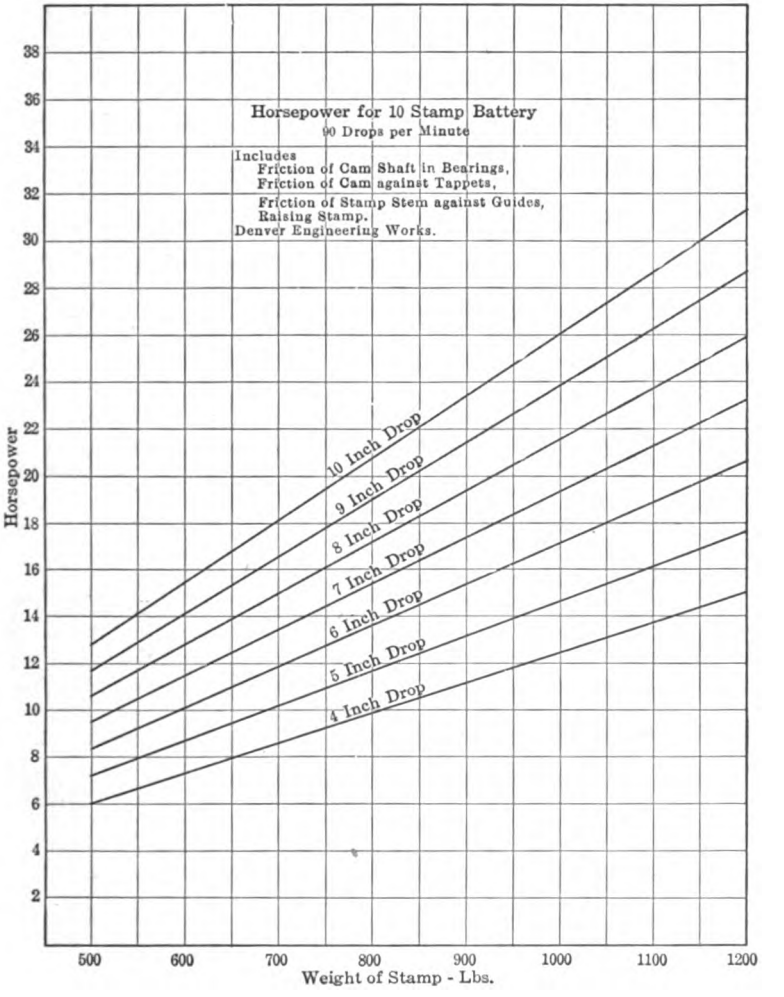

FIG. 84. — POWER DIAGRAM FOR STAMP MILLS.

per miner's inch per 24 hours. A miner's inch amounts to 67.05, 67.10, 67.50, and 67.50 tons of water per 24 hours, respectively. For 6.68 tons, the cost would be 2.989 cents, 1.792 cents, 1.979 cents, and 1.979 cents respectively, that is, these figures represent the cost per ton of ore crushed.

§ 196. WATER USED IN STAMPING. — The quantity of water used in stamping varies with the amount that is available and also with the treatment which is to follow. The greater the quantity of water, the more rapid will be the stamping, and the less the sliming, for the reason that the crushed particles will be

taken out of the way as soon as they are crushed, by a large quantity of water. This increase, however, is not proportional to the amount of water and as water increases, very soon reaches a practical maximum. With a small amount of water, the crushing of the next fragments is seriously hindered by the fine ore which has not yet been discharged, and which is crushed finer in consequence. If we carry the idea still further in the direction of diminution of water, we reach a condition where the mortar is filled with mud and the stamp ceases to crush anything.

§ 197. ADVANTAGES AND DISADVANTAGES OF GRAVITY STAMPS as compared with rolls and grinders may be expressed as follows:

Advantages:

1. They are simple in design and simple and comparatively economical in operation, not requiring skilled mechanics.
2. They not only crush fine at one operation, but they successfully combine this crushing with amalgamation. They are more successful than any of their competitors in the way they brighten the gold for amalgamation.
3. They are adapted to the treatment of a great variety of ores, and in many cases, give better results than any other process.
4. There is no great loss of power by friction.
5. A disabled battery may be hung up and repaired without delaying its associate.

Disadvantages.

1. The first cost is large and transportation charges are high.
2. The strains are excessive, necessitating heavy frames and large and expensive foundations. In consequence, they are cumbersome and require a great deal of space.
3. They are not a positive machine, that is, the power consumed is a consant, whether the rock is broken or not.
4. There is danger of over-stamping and sliming.
5. They are not well adapted to dry crushing, because of their small capacity when used.

These disadvantages are not so important as they at first appear. The excessive first cost and cost of transportation appear much smaller when based on the total amount of ore crushed. Sliming the ore may be avoided to a great extent by making suitable adjustments. In some cases it may happen that sliming is an advantage.

In spite of the frequent attempts to replace stamps by other machines, the advantages of the former so greatly exceed their disadvantages that their continued use for gold extraction is quite certain, especially for hard and free-milling ores; though for some ores other processes are more suitable.

CHAPTER VI.

GRINDERS OTHER THAN GRAVITY STAMPS.

In the following articles there will be discussed a number of typical machines, aside from gravity stamps, that are used for fine crushing. This will include the arrastra, the grinding pans, tube and ball mills, the Chili and Bryan mill, the Huntington mill, the Griffin mill, and the swing-hammer pulverizer. There are a multitude of mills that come properly under this head but the author believes that if the student understands the principles of these machines and their mode of operation, he will be in a position to understand any of the various other machines which find occasional application in the mills.

§ 198. PURPOSE. — There are three chief purposes for which these machines have been designed: (*a*) to replace gravity stamps for crushing gold ores or jig middlings; (*b*) to further comminute material already reduced to a comparative degree of fineness by gravity stamps; and (*c*) for grinding soft substances, as phosphates, asbestos, cement, gypsum, talc, etc.

In comparing the different fine pulverizers there are several qualities that need to be considered; they are: Capacity, cost of crushing, the brightening of gold preparatory to amalgamation, ability to act as an amalgamator, and tendency to form slimes. The gravity stamps appear to stand at the head of the list for all cases except where the production of large quantities of slimes must be avoided. Machines acting on the roller principle, by pressure mainly, make less slimes than the others, particularly if they have a free discharge.

While Chili mills, Bryan mills, and Huntington mills have, from time to time, been tried for crushing gold ores gravity stamps are still the standard machine. Tube mills and grinding pans are used in the gold and silver mills, but not to replace gravity stamps. They take up the work of comminution where gravity stamps leave off and serve as supplementary machines.

§ 199. CLASSIFICATION. — The machines here to be described work on four principles: (1) Abrading or true grinding, (2) pressure, (3) blow on a die, and (4) blow in space. The grinding pans act on the true grinding principle alone. Tube and ball mills work mainly by grinding but also by pressure and blows. The Chili and Bryan mills act mainly by grinding, the Huntington mill by pressure, and the swing-hammer pulverizer by blows struck in space.

Before taking up the discussion of the more modern machines it may be of interest to discuss one of the earlier and simplest forms of apparatus used in gold and silver milling operations, the arrastra. The arrastra may be found in successful operation even at the present day.

§ 200. ARRASTRA OR DRAG-STONE MILL. — This mill consists of a circular pavement from 6 to 20 feet in diameter with a retaining wall around it and a step in the center. Upon the step stands a vertical revolving spindle or shaft, and from the spindle extend horizontal arms to which large boulders, called drag-stones, are attached by chains. The boulders are dragged around the circle by the arms and crush the ore by a true grinding action.

The arms number from 2 to 8, usually 4. The drag-stones vary from 2 to 12, commonly 4; they weigh from 80 to 2,000 pounds, averaging about 300

pounds. Holes are drilled in the stones, plugged with dry wood, and the eye rings are driven into these plugs. They are placed so that the stone shall slide on its largest plane surface and forward of the center of gravity so that the front edge of the stone may be lifted sufficiently to ride over the coarsest of the ore during the early stage of grinding.

To prevent leakage of quicksilver the pavement is built upon a clay or concrete foundation which is always wider than the pavement. The latter is about 1 foot thick of granite, basalt, or flinty quartz, a rough-grained rock being preferred. The joints are filled with fine tailings, or better with cement. The retaining wall, 2 to 4 feet high, is made of stones laid in cement, of wooden staves bound with iron hoops, or is merely a clay bank. It has a gate or a series of plug holes for discharging the pulp and sometimes screen discharges for continuous work.

The speed is 4 to 18 revolutions per minute, usually 10 to 14 for power arrastras. Small arrastras are driven by a horse or mule attached to an extension of one of the arms, the animal walking around the circle. Large arrastras are driven by a horizontal water wheel, suspended from cross arms separate from the dragging arms and extending outside the retaining wall, or they are driven by a shaft with beveled gears. One long shaft may in this way connect several arrastras with a single driving engine.

It is used as a fine grinder and amalgamator with both gold and silver ores, and is fed with material seldom above ¾ inch in diameter, often much below. It is used where cheapness, both of installation and of running, is essential and at the same time, small capacity is not objectionable, for example, in regions remote from supplies. It is often used for re-treating tailings of gold mills, chiefly by lessees.

One mill visited by the author consisted of four arrastras grinding the tailings from several other mills. These arrastras (see Fig. 85), consist of a pave-

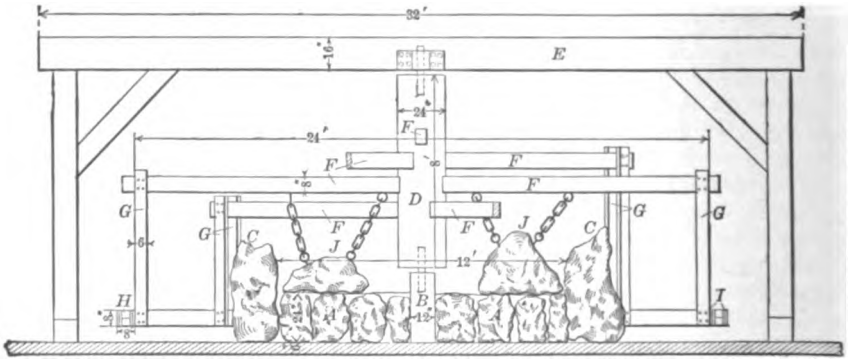

FIG. 85. — SECTION OF ARRASTRA.

ment *A*, 2 feet thick, built of stones and cement with an underlying bed of clay, 6 inches thick. The inside diameter is 12 feet; in the center is a step *B* of oak timber, projecting 1 foot above the pavement to receive the central shaft. Around the pavement is built a cemented stone wall *C*, 2 feet thick, 4 feet high, and 2 feet above the pavement. Upon the center step stands a rough, vertical shaft or spindle *D* of pine wood, 2 feet in diameter, 8 feet high, with a toe of 3-inch diameter round iron at the lower end to support it in the step, and an extension of 2 feet above the top, of 3-inch round iron to act as the top journal. This upper journal runs in a wooden bearing bolted to the side of a horizontal round timber *E*, which is 16 inches in diameter, 32 feet long, strongly supported and braced at the ends. Four timbers *F*, 6 × 8 inches,

pass horizontally through the vertical shaft, the top of each being 1 foot above that of its predecessor and one-eighth of the circle in advance of it, and furnish eight arms, each 12½ feet radius, for the support of the water wheel. At the end of each arm are suspended two vertical timbers *G*, 2 × 6 inches, supporting a horizontal impact water wheel, 24 feet inside diameter. The buckets are placed between two rims *I*, 8 inches apart; each rim is made of two thicknesses of 1-inch board, 8 inches wide, which, by breaking joints, maintains the circular form. The buckets *H* are 8 inches deep and are made of two parts, the upper making 75° with the horizontal, sloping toward the water jet; the lower, 30° with the horizontal and about right angles to the jet of water. The jet of water, not shown in the figure, is 5 inches wide, 10 inches deep, and slopes 45°, with a head of 12 to 16 feet. The speed is 12 to 14 revolutions per minute.

Four drag stones *J*, weighing from a ton down, are attached by chains to the horizontal arms and the length of the stones is so placed with reference to the radius that one stone causes an outward current while another causes an inward current. The stones last from 1 to 3 months, according to their size. Generally, two new and two old stones are run together. The pavement, 2 feet thick, lasts 4 months.

The charge for each arrastra is estimated to be 4½ to 5 tons. The feed sand is tailings which have passed through screens with 0.030-inch (0.76 mm.) round holes, bringing water enough to liquefy the pulp. The treatment lasts 24 hours and the sand is mostly ground to fine mud.

Computing the power from the flow of water, and assuming the efficiency of the water to be 40%, and that of the jet 100%, the power actually used would be from 5.25 to 8.1 horse-power. Three men per 24 hours are required to run the four arrastras.

Continuous Grinding Pans.

§ 201. Grinding pans are in use among the gold and silver mills for fine grinding. A considerable difference of opinion has existed and in fact still exists, as to whether the grinding pan or the tube mill is the more economical grinder. Experiments carried out at the Ivanhoe Gold Corporation, Western Australia, show a slight advantage as to cost of grinding in favor of grinding pans. The author finds ardent defenders of both machines. It is conceded that grinding pans possess the advantage that they may be used as amalgamating machines. At the Lake View Consols we find grinding pans preceding tube mills, thus seemingly admitting that the pans, while possessing superior qualities as amalgamators, are not as good fine grinders as the pebble mill. Argall recommends grinding and amalgamating pans for crushing from a size of about 0.06 inch down to 0.02 inch. To the author it seems that under average conditions the tube mill is perhaps better fitted to receive pulp through 0.02 inch or thereabouts, reducing it to a very fine state of division, than is the grinding pan; whereas the range of the grinding pan for the most economic working may be, as Argall claims, somewhere between 0.06 and 0.02 inch. If we consider the conditions under which crushing takes place, we shall see a reason for this. Let us suppose that the grinding pan is being fed with grains having a maximum diameter of 0.06 inch ($\frac{1}{16}$ inch). Now as this material becomes gradually comminuted a constantly increasing amount of power is consumed in the grinding of shoes against dies. In the wet-grinding tube mill, on the other hand, grinding takes place largely between the pebbles, the material being in the form of a thick pulp so that, no matter how fine the pulp may be, almost no power is expended in useless wear. Hence the economic range of grinding pans is from a size of, let us say, 0.06 inch down to the point

where the excessive grinding of iron against iron renders it more economical to resort to tube mills. The author does not go so far as to set this lower limit at 0.02 inch, but would call attention to the above as a factor which, theoretically

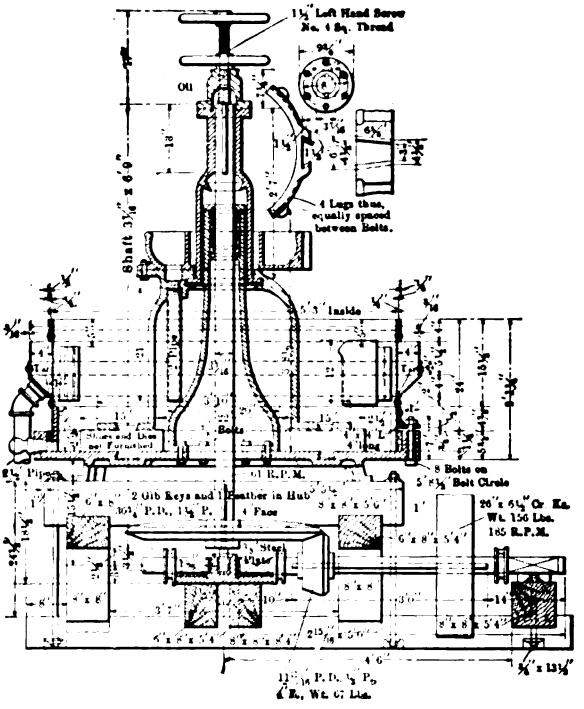

FIG. 86*a*. — CROSS-SECTION OF CONTINUOUS GRINDING PAN.

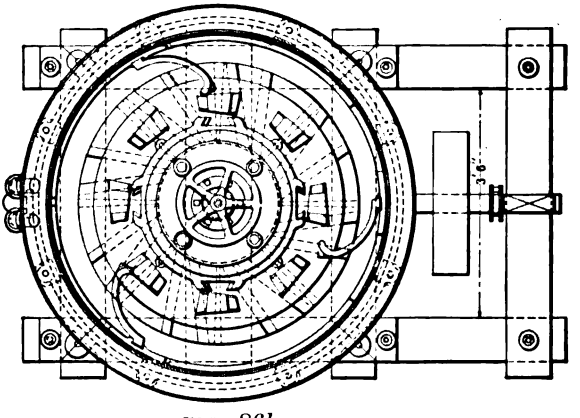

FIG. 86*b*. — PLAN.

at least, bears on the question. By using grinding pans as a preliminary operation to tube-mill grinding, not only are the advantages of amalgamation realized, but also the tube mill is relieved of that portion of the work of grinding which it is least fitted to do.

That the grinding pan is capable of reducing 0.06-inch material to an extremely fine state of division with a fair degree of economy cannot be denied. Where there are difficult transportation problems to contend with, grinding pans furnish a means of at least closely approaching the economy of tube mills.

Figs. 86*a* and *b* show a grinding pan. This pan is 5 feet in diameter, with shoes and dies of form similar to those of the Wheeler amalgamating pan, but in all its features designed and constructed with special reference to the requirements of re-grinding in cyanide work.

The pulp for re-grinding is led into an annular feed box surrounding and attached to the upper part of the driver, and passes downward through four pipes to the inner edges of the mullers. In the upper edge of the curb an annular space will be seen, which is intended to receive a continuous strip in order to secure the desired height of curb. Wood or lead is used for this, as the overflow can be then made level independently of the bottom of the pan.

The discharge is over the edge of the curb into the launder surrounding the pan, and the height of the curb, together with the amount of water supplied, regulates the fineness of product, more water being used for a given size with a high curb than with a low one. Three equidistant plows held in sockets attached to the inner surface of the curb serve to agitate the pulp and direct it toward the center. The dovetail sockets on the outer edge of the feed box are for compensating weights not shown in place in the illustration.

The weight of these pans without the timber framing is 7,500 pounds each.

§ 202. DETAILS FROM AUSTRALIAN PRACTICE. — Table 36 gives details concerning the use of grinding pans in the gold mills of Western Australia.

TABLE 36. — GRINDING PANS IN GOLD MILLING PLANTS OF WESTERN AUSTRALIA.

Location.	Size of Pan.	Tons Capacity 24 Hours.	Horse-power.	Revolutions per Minute.	Remarks.
Ivanhoe Mill	5 foot	20	6½	57	With amalgamation.
Associated Northern Gold Mine	5 "	8	4.8	47	" "
Sons of Gwalia Gold Mine	5 "	33	5½	45	" "
Great Boulder Perseverance	8 "	12.6	9	31	" "
	8 "	8.4	6	27	" "
Great Boulder Proprietary	5 "	15	4.5	62	" "
Associated Gold Mine	5 "	16.5	5.2	47	Grinding only.
Lake View Consols Gold Mine	5 "	30	7	45	" "
Great Fingall Gold Mine	5 "	33	5	45	" "

As to the wear of shoes and dies, it may be said that when grinding raw ore the life of a set of shoes and dies is about 2 months. When grinding roasted ores the life of shoes and dies varies from 3 to 6 months. At the Great Boulder Perseverance the abrasion amounts to 13.23 ounces per ton of sands ground.

If we take the grinding pans in use at the Ivanhoe mill as representative of average practice the results produced in grinding are as given in Table 37.

TABLE 37. — SIZING TESTS ON FEED PULP AND GROUND PRODUCT OF GRINDING PANS AT IVANHOE MILL.

Size Mesh.		Feed Pulp.	Discharge Pulp.
Through	On.	Percent.	Percent.
.....	40	31.4	0.6
40	60	21.8	6.2
60	100	17.6	28.7
100	150	6.1	8.0
150	.....	23.1	56.5

Tube and Ball Mills.

§ 203. The Tube Mill. — A tube mill (see Figs. 87*a* and *b*), consists of a long steel cylinder with heavy cast-iron ends. This is sometimes supported on hollow axial trunnions on which it revolves or it may be supported on friction rollers, the cylinder itself being provided with tires. The cylinder is lined with silex brick or some of the other lining materials which will be discussed later and is charged with a quantity of flint or silex pebbles. Material to be ground is charged through one of the hollow trunnions, becomes mixed with the pebbles, and, by the rubbing and pounding it receives is reduced to a fine state of division. The ground pulp is discharged at the opposite end from that at which it enters, either through the hollow trunnion or through openings

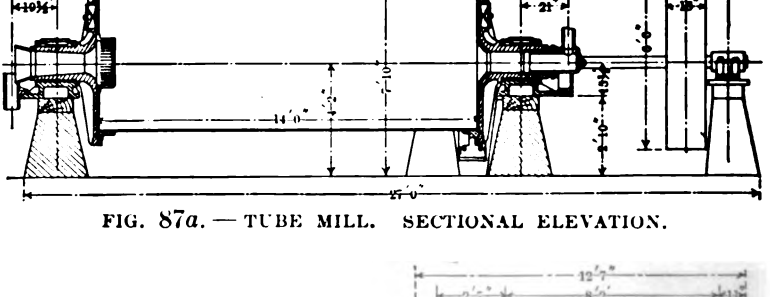

FIG. 87*a*. — TUBE MILL. SECTIONAL ELEVATION.

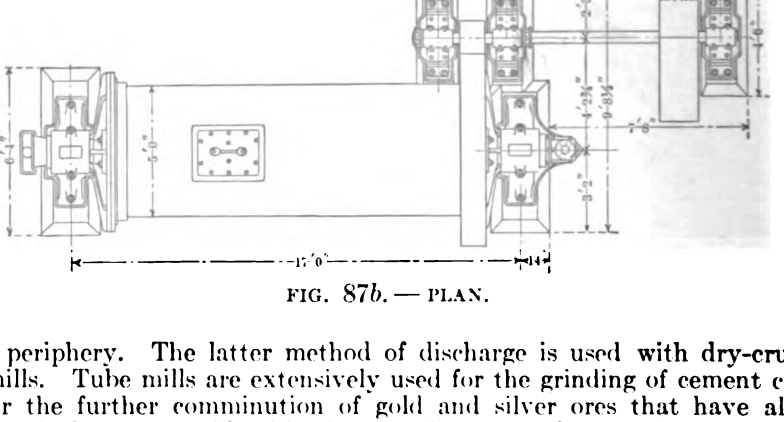

FIG. 87*b*. — PLAN.

in the periphery. The latter method of discharge is used with dry-crushing tube mills. Tube mills are extensively used for the grinding of cement clinker and for the further comminution of gold and silver ores that have already been crushed to a considerable degree of fineness by gravity stamps. In cement work the tube mill has met with favor not only from the fact that it has a large capacity and high efficiency, but also from the fact that it delivers an extremely uniform product, free from streaks of varying fineness. In gold and silver milling where stamping and amalgamation is followed by cyaniding, the practice formerly has been complicated owing to the fact that it was necessary to cyanide the sands and slimes separately. The tube mill has greatly simplified gold and silver milling practices. The pulp upon leaving the amalgamated plates goes to the tube mill where it is ground to an exceedingly fine state of division. It may then again pass over amalgamated plates and lastly

passes to slimes-treatment vats where it receives its final treatment, the gold-bearing cyanide solutions being extracted by means of filter presses. This is what is known as the all-sliming process. The use of the tube mill in South Africa has led to an increase in the percentage of gold extracted, an increase in capacity, and a decrease in the per-ton rate of working costs. These machines will now be discussed somewhat in detail.

§ 204. *Foundations for Tube Mills.* — The foundations for tube mills are usually of cement. These foundations should be made sufficiently heavy and plenty of time allowed for setting before starting the mill. There should be a good cement floor underneath the mill and sloping to a gutter leading to the cone, spitzkasten, pump or wheel, constituting the return circuit. This enables washings from the floor to be returned for re-grinding.

§ 205. *Liners.* — Various materials have been used as tube-mill linings, among which may be mentioned silex, quartzite, steel, manganese steel, and chilled cast iron. Of these silex has been in most cases the most satisfactory substance. The great trouble with the usual forms of liners has been the serious delays caused by renewals. This has led manufacturers as well as users of tube mills to seek some form of lining which would do away with the necessity for frequent renewals. In this way the so-called El Oro lining has been developed.

This form of lining is shown in Fig. 88. As may be seen in the cut, cast-iron ribbed plates are bolted to the mill shell, so that the ribs form continuous channels. After the mill has been charged with a load of pebbles and revolved a few times a portion of the pebbles becomes tightly wedged in the channel and forms a very effective grinding surface. Places in the channels from which the pebbles have become dislodged are quickly refilled during subsequent revolutions of the mill. This form of lining bids fair to give continuous and efficient service for two or three years. At the present time linings that have been in use continuously for 8 months show no appreciable wear. A more recent lining than that shown in the cut has the plates so cast that where two plates join, the ribs also join — being half their natural thickness on these joints — the two ribs thus making one regular rib. There is, therefore, no possibility of a pebble becoming dislodged after once being wedged in place, due to slight play or vibration between plates. These liners are reported to be much more satisfactory than the old form, less expensive in first cost as well as in upkeep.

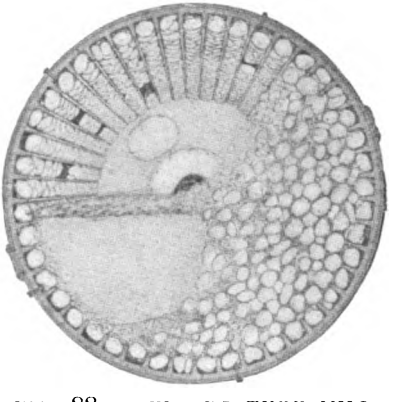

FIG. 88. — EL ORO TUBE MILL LINING.

The cost of silex lining varies with the quality from 60 cents to $1 per square foot when 2½ inches thick, to $1.60 per square foot of grinding surface when 4 inches thick. Records of silex linings 2½ inches thick in Colorado practice show a service of 6 months, while South African records show service of 2 years and over. A 4-inch silex lining lasts 1 year with average Colorado ores.

§ 206. *Feed Opening.* — The usual method of feeding tube mills is by a hopper and pipe (see Figs. 87*a* and *b*), the pipe entering the mill through a hollow trunnion. Fig. 89 shows a form of scoop feed device that is quite frequently used. A tank or launder is installed at the feed end of the mill from which the scoop lifts a quantity of pulp at each revolution of the mill, feeding the same

directly through the hollow trunnion into the mill. This device ensures regularity of feed to the mill and effects a high efficiency in the performance of the machine besides dispensing with the stuffing box, commonly used at the feed end of tube mills for wet-crushing work. The Abbé tube mill has a spiral in the feed end of the mill. (See Fig. 90.) In this mill the outside plate *A* has only the round opening at its center, through which the material from a pipe or chute is delivered into the receiving chamber, this chamber being separated from the spiral proper by the second plate *B*, having the crescent-shaped opening *C*, located where the spiral starts at the circumference, and through it the material passes into the spiral. At every revolution of the mill when the opening *C* is at the bottom, a certain quantity of material enters the spiral, and, as the machine revolves, is lifted to the center where it enters the grinding chamber. Thus after two or three revolutions there is a constant feed of a certain amount of material. This form of feeder has the same advantage as the scoop feed previously described.

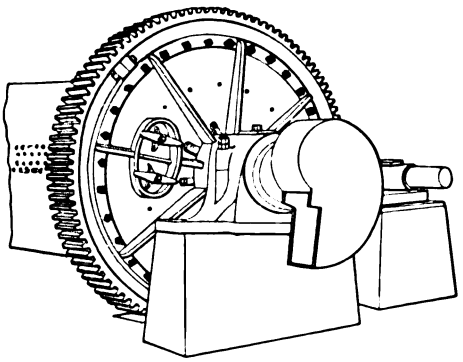

FIG. 89. — SCOOP FEED FOR TUBE MILL.

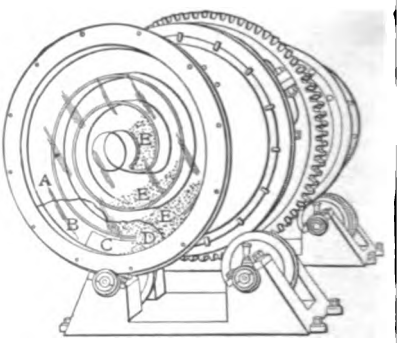

FIG. 90. — MODEL SHOWING SPIRAL FEED OF ABBÉ TUBE MILL.

§ 207. *Discharge Opening.* — The discharge end of the tube mill is provided with a plate or grating so arranged as to permit of the discharge of the finely ground pulp while retaining the pebbles until they are worn so small as to be of no further assistance in the work of grinding. The openings in this grating are usually oblong and about ⅜ inch by 1½ inches in size. Sometimes to secure the most efficient use of pebbles two tube mills are run in series, the second having a finer discharge grating than the first. The final discharge takes place into a box provided with a screen to catch pebbles.

In case of the tube mill discharging through a hollow trunnion it seems difficult to understand why, when the point of discharge is as high as the feed, any material can pass through the machine. The material to be crushed is mixed all through the pebbles. The pebbles are all striving to hurl themselves forward tangentially from the radius of the circle they are describing; some with more force than others, according to their weight and the distance from the center of rotation. There is as a consequence intense squeezing between the flints, and the thick pulp surrounding them is squeezed in all directions. Thus if we take a tube mill with no charge and commence feeding it at one end, we find that the pulp will naturally be squeezed into the empty spaces that are to be found in the direction of the desired flow. When the pulp reaches the other end it is naturally squeezed out, the discharge thus creating a natural tendency for the pulp to flow from the feed end toward the discharge.

Fig. 91 shows the discharge end of the Abbé tube mill. In this mill the pulp as it is discharged is picked up by the spiral and delivered by it at the level of the trunnion. This form of discharge gives a more uniform pulp where the mill is used as a re-grind than the overflow discharge can possibly give. The pulp delivered by the overflow discharge is of necessity a classified product with heavy mineral grain of smaller size than the gangue.

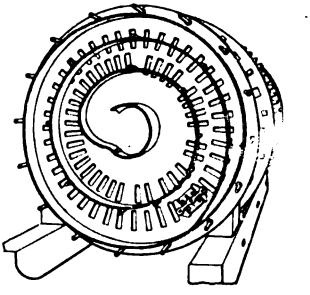

FIG. 91. — SPIRAL END DISCHARGE.

§ 208. *Pebbles.* — The pebbles used for crushing are of the variety known as Greenland or French flints. So-called Greenland flints are found on the shores of Denmark and are in reality flint nodules. These cost about $20 per ton. Ordinarily manganese-steel balls are not suitable. Pebbles used at the cement works near Florence, Colorado, come from the banks of the Arkansas River. Australian experience has shown that 1 pound of pebbles will crush about 1 ton of sand. The average charge of flints for a 5 × 14-foot mill is 4 tons, and these cost $11 to $16 per ton, depending upon quality.

Davidsen gives a formula for calculating the amount of pebbles which should be charged to a tube mill. The rule is, "If the interior volume of a tube mill is M cubic feet, the weight of the pebbles W which should be charged into the mill is $W = 44\,M$ pounds." This applies to mills of the Davidsen type only. In this country practice would seem to indicate the formula $W = 62\,M$.

§ 209. *Feeding Tube Mills.* — Argall's plea is against using any machine for crushing beyond its economic range. He apparently considers the tube mill's place to be that of crushing fine material say from 0.02 inch. No results are presented by him showing that the tube mills do their best work when fed with fine stuff. Taking a crushing and amalgamating plant in which the ore is finally reduced to $\frac{1}{100}$ inch for filter-press work, he suggests as the most economical arrangement: Rock breakers, run of mine sizes to 2 inches; rolls in series, crushing wet (2–0.75; 0.75–0.24; 0.24–0.06 inches); grinding and amalgamating pans, 0.06 to 0.02 inch; tube mills, 0.02 to 0.0025 inch or 200 mesh.

There should be a dewatering cone directly over the feed hopper to get the pulp as thick as possible for the mill, 1 to 1 or less. The best results are obtained on pulp running 0.75 water to 1 ore. The overflow of this dewaterer can be carried over the mill into the discharge box to dilute the pulp again so that it will flow through the launders.

In running the mill a regular feed is of prime importance, and when grinding wet, care should be taken that the pulp be not too thin. The fineness of the resulting products can be controlled somewhat by varying the rate of feed. If coarseness is required the feed is increased and vice versa. The quantity of pebbles used also effects a similar change. An increase in the amount of pebbles fed is made for fine grinding; and a decrease, when coarse grinding is wanted. Thus we have four adjustments: rate of feed, thickness of pulp, amount of pebbles, and speed of rotation.

The material used for feed must have received a preliminary crushing. The general rule is, where wet crushing of gold ores is in vogue, that the crushed material, leaving the amalgamating appliances, shall pass to hydraulic classifiers, the overflows of which deliver minutely subdivided material, and the spigots, the sand. The sands then go to pebble mills. The pulp from the pebble mills goes to hydraulic classifiers, the material which has been crushed

so that 90% or more will pass through a 200-mesh screen passing on, and the coarse material going back to the tube mill for re-grinding.

§ 210. *Direction of Rotation.* — The tube mill should rotate in such a direction as to cause the thrust on the driving pinion to be downward into the pillow block. Open belts should be used wherever possible. In the case of an Abbé tube mill, provided with spiral feed and a spiral at the discharge end, it may become necessary to reverse the spiral in order to obtain the above results.

§ 211. *Speed of Rotation.* — Table 38 gives the speed at which tube mills of different diameters should be run to secure the best results.

TABLE 38. — DIAMETERS AND CORRESPONDING SPEEDS OF REVOLUTION FOR TUBE MILLS.

Diameter of Shell.	Proper Revolutions of Shell per Minute.
36 inches.	36
42 "	33
48 "	31
54 "	29
60 "	28
66 "	26
72 "	25
84 "	23
96 "	22

If these speeds are exceeded the crushing effect of the pebbles is much reduced; there would be some rolling and grinding action of the pebbles on ore, but for a granular product the desired action is obtained by having such a speed that the pebbles drop on the ore particles. In wet grinding a selective action goes on in the mill, the result being that the coarser particles are crushed while the finer particles pass on directly through the mill.

Fischer gives as the best practical speed $N = \frac{23}{\sqrt{D}}$ to $\frac{28}{\sqrt{D}}$ in meters and Davidsen gives $N = \frac{200}{\sqrt{D}}$ in inches whereas White derives a formula $N = \frac{34.22}{\sqrt{D}}$ in meters which figure, as he says, is more nearly approximated in practice. Fischer states that figures obtained in practice would indicate something like $\frac{32}{\sqrt{D}}$ to $\frac{35}{\sqrt{D}}$. If we consider the case of a 5-foot tube mill, the results given by these various formulæ will be as shown in Table 39.

TABLE 39. — COMPARISONS OF VARIOUS FORMULÆ FOR REVOLUTIONS PER MINUTE OF TUBE MILLS AS APPLIED TO STANDARD 5-FOOT MILL.

Fischer.	Davidsen.	White.	Practice.
18.69–22.76	25.86	27.74	28
*26.01–28.45	.....	.....	.....

* From experiment.

§ 212. *Horse-power.* — The horse-power consumed by a grinding mill charged with flints, as called for by the formula given in § 208 and having the number of revolutions per minute N given by Davidsen's formula $N = \frac{200}{\sqrt{D}}$ is $P = 0.15 M$, where M = contents in cubic feet.

The accuracy of this formula has been confirmed by a number of recent installations where power is furnished by electric motors.

This formula should be taken to apply only when the charge of pebbles corresponds to that given by Davidsen's formula. In the case of a mill using a greater charge of pebbles than is called for by Davidsen's formula, the power required to run the mill will of necessity be proportionally greater. For instance, in case of a 5 × 27-foot tube mill by Davidsen's formula, we find the amount of pebbles required is equal to 9.3 tons, and the power required would be about 64 horse-power. If instead of 9.3 tons we use 16 to 17 tons as has been done at El Oro, the power required has been found to be 107 horse-power.

§ 213. *Quality of Work Done by the Tube Mills.* — As has been previously stated, the feed to tube mills should consist of particles all smaller than 0.02 inch in diameter. For the purpose of showing what may be expected of tube mills, the following examples will be given. Table 40 gives a comparative sizing test of feed and finished pulp of an Abbé tube mill in use in Guanajuato.

TABLE 40. — SIZING TEST OF FEED AND DISCHARGE OF ABBÉ MILL AT GUANAJUATO, MEXICO.

Size.	Mesh.	Feed. Percent.	Discharge. Percent.
On	40	11.2	0.5
"	50	11.2	1.7
"	60	8.9	2.9
"	80	16.6	6.0
"	100	16.3	16.2
"	120	26.1	21.8
Through	120	9.7	51.2

When extremely fine grinding is being done, the discharged pulp is often sent to a classifier which separates the coarse particles from the extremely fine particles and returns the former for re-grinding. Table 41, given by O. B. Ward, of the Hannon Star Gold mines, Kalgoorlie, illustrates a case of this sort. The column marked "Pulp from Tube Mills" represents the percentage of various sizes obtained in one operation, while the column marked "Finished Product," is the end result obtained.

TABLE 41. — SCREEN TEST OF FEED AND FINISHED PRODUCT OF TUBE MILL AT THE HANNON STAR GOLD MINES, KALGOORLIE.

Size.	Mesh.	Feed. Percent.	Pulp from Tube Mills. Percent.	Finished Product. Percent.
On	40	4.5	0.1	.....
"	60	9.5	2.0	0.0
"	80	6.8	4.2	0.2
"	100	13.1	12.3	0.5
"	150	19.0	20.3	4.0
Through	150	47.1	62.8	95.3

§ 214. *Capacity of Tube Mills.* — The capacity of tube mills varies in almost every plant. The author has tried to select a few examples to give the reader an idea as to what may be expected of these machines. The Abbé tube mills in use at the Liberty Bell mine, Telluride, Colorado, 5 feet in diameter by 22 feet long, each crush 125 tons of material per 24 hours wet grinding. The material fed is about 10-mesh and the finished product 100-mesh. At Guanajuato, Mexico, an Abbé tube mill, 4 feet 6 inches in diameter by 20 feet long, grinds an average of 60 tons of hard siliceous ore per 24 hours. The feed sizes range from 26 to 60-mesh, and 70% of the finished product will pass a 120-mesh sieve.

In one instance a 6 × 8-foot tube mill gave a capacity of 1 ton per hour from 8-mesh to 125-mesh; and instances are given of 5 × 16-foot mills handling 100 tons per 24 hours, and grinding to 60-mesh and finer.

The capacity of a tube mill depends naturally upon the hardness of the material fed. Experience in Kalgoorlie shows a capacity for a 4½-foot machine of 38 tons of the unroasted ores of that district. The larger machines used in South Africa have a capacity of 150 tons of sand per 24 hours. The general impression there seems to be that the smaller machines are more economical in operation.

§ 215. *Consumption of Pebbles and Liners.* — The consumption of pebbles varies from 2 to 4 pounds per ton of ore crushed and the consumption of liners is from ½ to 1 pound per ton of ore crushed.

§ 216. *Cost of Tube Milling.* — The average cost of tube milling should be approximately as follows:

Power per ton	3.60 cents.
Wages " "	2.82 "
Liners " "	2.00 "
Maintenance per ton	1.36 "
Pebbles " "	1.16 "
Sundries " "	0.48 "
Total	11.42 "

§ 217. *Efficiency of the Tube Mill.* — In consideration of the increasing importance of tube milling, the question of determining the amount of useful work performed by this class of machine, becomes not only of general interest, but of very great importance.

The method employed until very recently in South Africa is based simply upon the diminution of the + 60-mesh grade and the increase of the — 90-mesh grade, as shown in the average grading of the pulp leaving the battery, and of the pulp leaving the cyanide works. Thus:

Grade.	Percent. Battery Pulp.	Percent. Final Pulp.	Percent. Difference.
+60	32	10	22
+60−90	12	14	.....
−90	56	76	20
.....	.....	.....	42

This 42% multiplied by the number of tons of ore crushed by the stamps during the month is taken as an index of the tons of sand re-ground. This is, of course, simple and would be all right if all the mills were working under the same conditions; but the assumption upon which the method is based is most seriously at fault, that is, that the same amount of power is required to crush material through 60-mesh whatever its original size.

§ 218. S. H. Pearce and W. A. Caldecott have made a very careful study of this question and their work is of great importance. At the start they very properly discard the mesh system of screen measurement as obviously useless for any exact work and define their sieves strictly by the diameter of aperture; the 90-mesh screen having been found to have an aperture 0.006 inch in diameter, and the 60-mesh screen an aperture 0.010 inch in diameter. The method suggested by them for drawing conclusions from a grading analysis, is based upon Rittinger's theory.

This assumes that the work done in crushing is proportional to the surface exposed by crushing. The problem becomes the mathematical one of

determining the relative surface of the grains of pulp before and after passing through the tube mill, assuming similar shapes and equal weights of all the particles included in each successive grade. Since for any definite weight of ore the total surface area varies inversely as the diameter, then the relative surface exposed by each grade may be determined by dividing the weight of that grade by the average diameter of the particle in the grade. Hence at the start a sizing test of the pulp is needed; and next, one must determine the average diameters of the particles in each of the various sizes made. The most natural assumption to make was that the arithmetical mean between two sieve sizes represented the average diameter of the particle of that grade. In this way the following results were obtained:

Grade. Inches.	Mean Diameter. Inches.	Before.		After.	
		Weight.	Relative Surface.	Weight.	Relative Surface.
−0.024 + 0.010	0.017	0.32	18.8	0.10	5.9
−0.010 + 0.006	0.008	0.12	15.0	0.14	17.5
−0.006 + 0.000	0.003	0.56	186.7	0.76	253.3
.....	.....	1.00	220.5	1.00	276.7

Additional relative surface exposed = 56.2 = 25.4 percent.

In the foregoing illustration the sieves used had aperture diameters of 0.024, 0.010, and 0.006 inch respectively. Before proceeding it may be well to consider just what is meant by the average grain. If one refers merely to the average of two sieve sizes, or to the grain midway between the largest grain that will pass through one size and the smallest grain that will rest upon the next sieve of a series, then the arithmetical mean of the two sieve sizes is surely what we want. In this case, however, we seek the crushing efficiency of a machine; the idea of work has now presented itself and this must necessarily change our ideas as to what constitutes an average grain. Under these conditions E. J. Laschinger defines the average grain substantially as follows: "Starting with Rittinger's theory, suppose we have equal unit weights of particles of diameters 1, 2, 3, 4, 5, 6. The relative measure of work done would be 1, $\frac{1}{2}$, $\frac{1}{3}$, $\frac{1}{4}$, $\frac{1}{5}$, $\frac{1}{6}$ = $\frac{147}{60}$ = 2.45, or the average work per unit of weight would be 147 or 0.4083. The diameter now of the particles (if the whole product were of this uniform size) which would require this work done on it is the reciprocal of this or 2.449. Hence the average grain from the point of view of work done is 2.45 and not 3.5 as would be indicated by the arithmetical mean." This relation has been further expressed by Laschinger in a formula as follows:

$$d = \frac{d_1 - d_2}{\log_e \frac{d_1}{d_2}} = \frac{d_1 - d_2}{2.3026 \log \frac{d_1}{d_2}}$$

where d = average diameter of particles in grade.
d_1 = maximum diameter of particles in grade.
d_2 = minimum diameter of particles in grade.

Applying this formula to the foregoing illustration, and assuming that the smallest particles in the crushed product have a diameter of 0.001 inch, the following result is obtained:

Grade. Inches.	Average Diameter. Inches.	Before.		After.	
		Weight.	Relative Surface.	Weight.	Relative Surface.
−0.024 + 0.010	0.01595	0.32	20.1	0.10	6.3
−0.010 + 0.006	0.00783	0.12	15.3	0.14	17.9
−0.006 + 0.0001	0.00144	0.56	388.6	0.76	527.4
.....	.....	1.00	424.0	1.00	551.6

Additional relative surface exposed = 127.6 = 30.1 percent.

On the other hand, if we assume the diameter of the smallest particle to be 0.001 rather than 0.0001, the additional relative surface figures 50.4 = 25.6%. This shows the necessity of finer screens or other method of determining the sizes smaller than 0.006. If screen sizes are taken sufficiently near one another, the difference between the arithmetical mean and the logarithmic mean, as obtained from Laschinger's formula, is of no consequence. In the mill work, however, where only a few screens are made use of, as in the case of the illustrations given, Laschinger's formula seems to give the correct solution of the problem.

§ 219. BALL MILLS. — The ball mill (see Figs. 92*a* and *b*), acts upon the same principles as does a tube mill. The ball mill differs from the tube mill first, in that it is a short cylinder; second, instead of a lining similar to that of the tube mill the ball mill has die plates of steel around the circumference. The ore ground by the action of steel balls passes through spaces between these die plates upon a screen surrounding the cylinder, the oversize of this screen being returned usually by spiral end elevators and the undersize being discharged through the screen. These mills are like the tube mill in being cylinders revolving on a horizontal axis and crushing takes place in much the same way in both types of machines. Ball mills are used for crushing both wet and dry and often as re-grinding machines. They are especially suited for fine grinding of cements, fertilizers, clays, and soft ores.

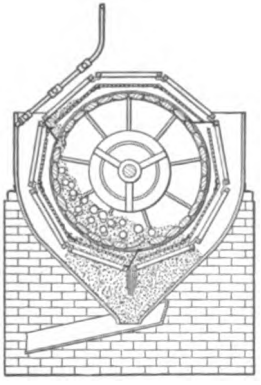

FIG. 92*a*. — CROSS-SECTION OF HUMBOLDT BALL MILL.

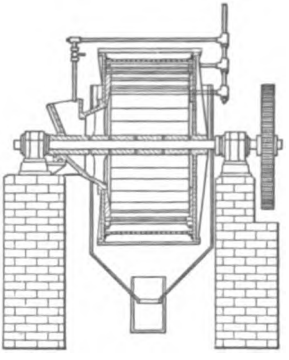

FIG. 92*b*. — LONGITUDINAL SECTION.

The grinding drum and side cheeks of the wet ball mill are made of steel and chilled iron. The drum is formed of separate cross-bars, curved on both sides, which form an undulating grinding surface. These cross-bars are bedded on and bolted to ring-shaped flanges cast on the side cheeks. The ring flanges have trough-shaped recesses suitable to the curvature of the bars. This arrangement insures a steady bedding and attachment of the cross-bars, and obviates the risk of breaking the flanges.

The interior undulating surface is said to add greatly to the reducing effect of the mill, as the material to be ground is prevented, together with the balls, from sliding over the inner surface of the grinding drum, being lifted again and again high up the side, and thrown off by the undulations.

The material broken falls through suitable slots between the cross-bars upon screens with coarse perforations, and through these upon the fine delivery screens round the periphery of the mill. The coarse material which does not pass the screens is continuously returned to be further reduced. In consequence of the percussive action of the balls, the screens remain very open; and the outer screens are sprayed to prevent them from blinding.

§ 220. *Ball Mill Notes.* — An engineer of Allis-Chalmers Company, who was for some years in Australia, furnishes the following interesting data concerning the use of ball mills with forged-steel balls at one of the leading reduction works in Kalgoorlie district.

The process there usually began with a Gates breaker; but it was found that the ball mills gave excellent results when fed directly with ore, 3% of which, by weight, would not pass a 6-inch ring, and 75% of which would not pass a 2-inch ring. The mills so fed were able to furnish 33 tons of product per 24 hours such as would pass a 20-mesh screen. A sizing test of the crushed product is given in Table 42.

TABLE 42. — SIZING TEST OF BALL-MILL PULP.

Through	20	on	40-mesh	24.1	percent.
"	40	"	60 "	9.4	"
"	60	"	80 "	6.2	"
"	80	"	100 "	6.6	"
"	100	"	150 "	3.2	"
"	150	"	200 "	4 2	"
"	200			46.3	"
Total				100.0	"

A glance at the above results shows the marvelous work of the ball mills. It will be observed that nearly half of the material was reduced to a state of division finer than 200 mesh.

One steel ball weighing 18 pounds added daily to each mill preserved the balance of steel in the mills; while the grinding plates and side liners were replaced in complete sets every 7 or 8 months at the cost of about $900. Each mill made 25 revolutions per minute and required 24 indicated horse-power. The ore crushed at the plant was calcareous and siliceous with gold in the form of tellurides. Forged-steel balls have done away with all the trouble which formerly arose from the uneven wear of cast-steel or chilled-iron balls.

Brooke says that on Kalgoorlie ores, in feeding Krupp ball mills, it has been found best to feed 2½-inch stuff. If fine material is fed the balls become imbedded, and do less work. With fine stuff the wear on plates and balls is greater, as the mill must be run with smaller charge.

§ 221. *Wear of Steel Balls.* — E. C. Vigeon has furnished very interesting data concerning the wear of steel balls in a ball mill in use at the "Sociedad Minas de Cobra de Cutter Cove" Punta Arenas, Chile, South America. This test lasted 820 hours, during which time 1,739 metric tons of ore were ground through 20-mesh. The results obtained in the test will be found in Table 43.

TABLE 43. — CONSUMPTION OF STEEL BALLS.

Number of Balls in Mill at Start.	Number of Balls Added during Run.	Number of Balls after Run.	Diameter of Balls. Centimeters.	Weight Balls in Mill. Kg.	Weight Balls Added. Kg.	Weight Balls after Run. Kg.
197	.....	.....	8	448.6	.....	.....
110	.....	.....	10	448.4	.....	.....
55	121	.....	12.5	449.5	943.5	.....
.....	.....	306	4.5–6.3	.....	.....	191.8
.....	.....	72	8.3–8.9	.....	.....	178.1
.....	.....	105	9.5–12.5	.....	.....	582.1
Totals	.....	.....	.....	1,346 5	943.5	952.00

§ 222. EDGE RUNNERS. — These mills, sometimes also called Edge-stone mills, have vertical rollers running in a circular enclosure with a stone or iron base or die and are provided with a screen around the die to limit the size of the crushed product. The action of the edge runner combines true grinding or abrasion with true rolling or pressure. The center of the roller is rolling upon the fragments while the two margins are sliding upon them; the outer is sliding forward, the inner backward. The nearer the margin the greater is the grinding action. It can hardly be a matter of doubt that, with light-weight rollers, the rolling action, by supporting the weight of the roller, impedes the grinding, and that a roller, with the central part cut away, would grind more rapidly than the usual form. On the other hand, with narrow, heavy-weight wheels, where the pressure per square inch is very high, the rolling action is probably fully able to keep up with the grinding. For example, T. A. Blake has reported that he tripled the capacity by making the runners narrower, thereby increasing the weight per square inch.

The Chilian form was originally used as a coarse grinder to prepare the ores for the arrastra. The modern forms, however, have been used as fine grinders.

§ 223. CHILI MILL. — The Chili mill in its crudest form consisted of a circular stone with a hole through the center, through which was passed a pole one end of which was fastened to a post, while the other end was pulled by an animal. Gradually the machine was delevoped into a mill with two wheels having iron tires and driven by water or steam. As the use of mills of this sort spread, numerous modifications were developed, among which are the fast-motion, edge-running roller mills, now prevailing.

In its original form, with slow motion, the centrifugal action or tendency to go in a straight line, instead of its circular course, was not great. When, however, the mills developed into massive form or were run at high speed, this tendency became important, and different methods were worked out to neutralize the outward thrust on the axle. Some mills have rollers inclined toward the center, like a railroad train rounding a curve; others are trunnioned at a point below the axle, so that the outward thrust is partly diverted, and the downward pressure of the roll on the die is increased. Any fast-motion Chili mill that employs no means to utilize, at least partly, the centrifugal thrust of the roller to the crushing can hardly be rated as high-class mechanism on account of its waste of power. One scheme that has been used particularly with massive slow-motion mills is known as the Mantey offset. The Mantey offset has the axle of the wheel set behind a diameter line to which it is parallel, so that in the turning of the mill, the roller, not being true with the die, is more or less shoved over it, while at the same time it revolves. When the offset is properly proportioned to the speed at which it is intended that the mill shall be run, this scheme is thoroughly successful; but as the resistance is that of grinding, it has the objection of consumption of power and metal common to grinders in the ratio of this action. With inclined rollers properly designed, the thrust force is exerted entirely on the die without loss. A vertical roller, trunnioned at a point below its axle, utilizes the centrifugal thrust of the total weight of the roller, less that part that lies below a horizontal line through the trunnion, plus its balancing equivalent above said line. The fast-motion mills generally utilize more than two wheels or rollers. If two rollers are used instead of three or four, the machine is simpler and easier of access for repairs. Large rollers also present a more acute angle to the die and prevent gouging, so making the proportional wear less. With rapidly moving mills, however, three or four rollers are the rule.

Fig. 93 shows one of the most modern of these machines. The feed enters at the top being received in a hopper which is fastened to the spider and

revolves with it. The feed passes from the hopper by way of pipes which deposit it directly in front of the rollers. Following each roller is a scraper which breaks up the layer of ore on the die and enables the next roller to exert its full

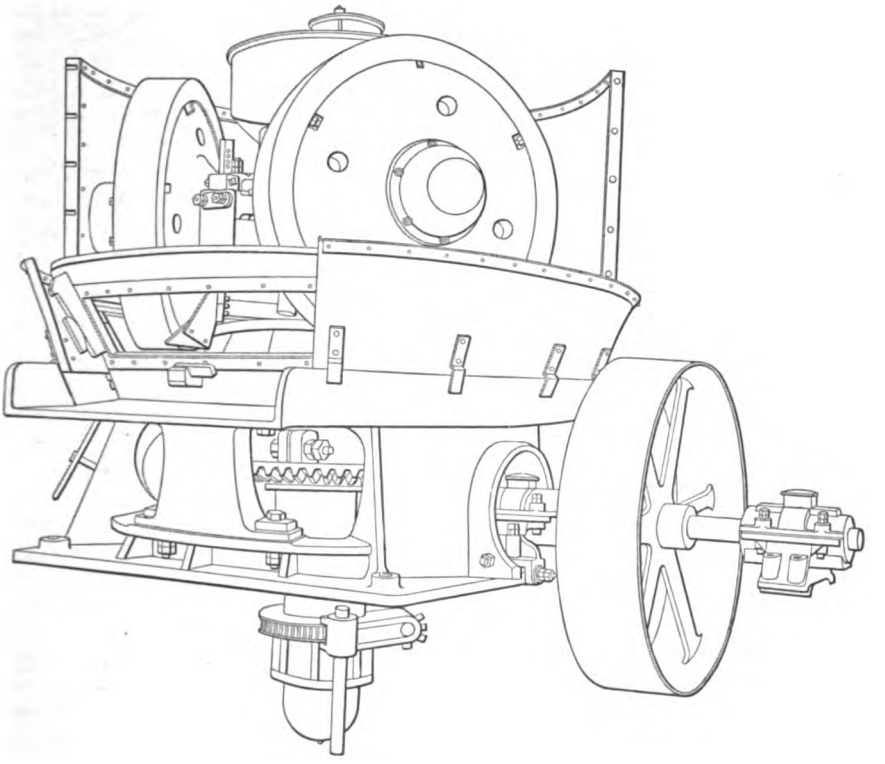

FIG. 93. — THE GARFIELD CHILI MILL.

crushing effect. A 6-foot mill of this type will crush 100 tons of fairly soft ore per 24 hours, reducing the same from ¼-inch size to 30 or 40-mesh. Table 44 gives an average sizing test of Chili-mill product.

TABLE 44. — SIZING TEST OF CHILI-MILL PRODUCT.

						Percent.
			On	40	mesh	5.0
Through	40	mesh	"	60	"	11.6
"	60	"	"	80	"	9.6
"	80	"	"	100	"	5.1
"	100	"	"	120	"	6.8
"	120	"	"	150	"	2.6
"	150	"	"	200	"	5.7
"	200	"				53.6
						100.0

A very friable lead and silver ore crushed by 15 × 9-inch Blake breaker, 30 × 14-inch rolls set ⅜ inch, and a 5-foot Chili mill running at 40 revolutions per minute to pass through an 8-mesh screen at the rate of 4 tons per hour gave the following:

	After the Rolls.	After the Chili Mill.
	%	%
Through 1 on 4 mesh (25 4 to 3 99 mm.)	89.869	0.000
Through 4 on 6 mesh (3 99 to 2.79 mm.)	7.317	0.000
Through 6 on 10 mesh (2.79 to 2.01 mm.)	2.814	0.000
Through 10 on 14 mesh (2 01 to 1 40 mm.)	0.000	7.910
Through 14 on 20 mesh (1 40 to 0.99 mm.)	0.000	11.431
Through 20 on 30 mesh (0.99 to 0.61 mm.)	0.000	11.362
Through 30 mesh (0.61 to 0 mm.)	0.000	69.297
Total	100.000	100.000

These mills are not counted a success as amalgamating devices for the reason that their speed (30 or 35 revolutions per minute), does not give the gold a chance to settle to the die and become properly brightened and prepared for amalgamation. Large mills with six rollers have been devised which run at a very low speed (about 8 revolutions per minute). These are said to be good amalgamators. Chili mills with three rollers are often spoken of as Bryan mills.

§ 224. THE HUNTINGTON CENTRIFUGAL ROLLER MILL. — This mill is used to do the work of a stamp mill in crushing gold ores, and serves as a fine grinder for re-crushing jig middlings. It is especially adapted for crushing clayey ores.

As shown in Figs. 94*a* and 94*b* it works upon the principle of Cornish rolls, only with this difference that the angle of nip is much more acute, the pressure is probably less powerful and the crushing is done under water, while rolls crush dry or at most in a running stream of water.

This mill crushes by the centrifugal force of steel rollers revolving against the inner surface of a heavy horizontal steel ring or die. The rollers are suspended upon rods from horizontal arms by short trunnions, allowing a swing of the rod and roller in a direction radial from the central vertical shaft. The vertical suspending rod is provided with a head at the lower end and the roller has anti-friction washers, babbitted bearings, and sleeve permitting free rotation upon it. The roller therefore takes on two classes of motion, namely, gyration around the central shaft and rotation around its suspending rod. Theoretically, the pressure can be increased indefinitely by increasing the speed of rotation, but practically the available pressure is limited by the jar. If the jar was overcome it would still be limited by strength of the die ring. In Table 45 the centrifugal force has been computed by the formula, $F = \frac{WRN}{2{,}933}$ where W = weight of roller in pounds; R = radius of gyration in feet; N = revolutions of central shaft per minute; and F = centrifugal force in pounds.

TABLE 45. — CENTRIFUGAL FORCE.

Size of Mill.	Mean Diameter of Die Ring.	Average Diameter of Roller.	Total Weight of Roller Available for Push.	Revolutions of Central Shaft per Minute.	Radius of Gyration.	Effective Push of Roller.
Feet.	Feet.	Feet.	Pounds.		Feet.	Pounds.
3½	3 33	1.219	470	90	1.057	1,372
5	4.75	1 396	506	70	1.677	1,418
6	5.479	1.584	617	65	1.947	1,731

Although the Huntington mill runs on the principle of rolls, it does not have the positive spring of the latter. It follows that it must be even more carefully guarded against large lumps. It is fed with particles not larger than ¾ inch in diameter.

The suspending rods incline inward and downward, causing the roller to be

¼ inch above the bottom at its outer edge and 1¾ inches above the bottom at its inner edge with the new roller. A removable annular disc or false bottom of cast iron is placed in the bottom of the machine to take the wear. The roller may be raised by using more washers above the head. Mercury is fed with ore

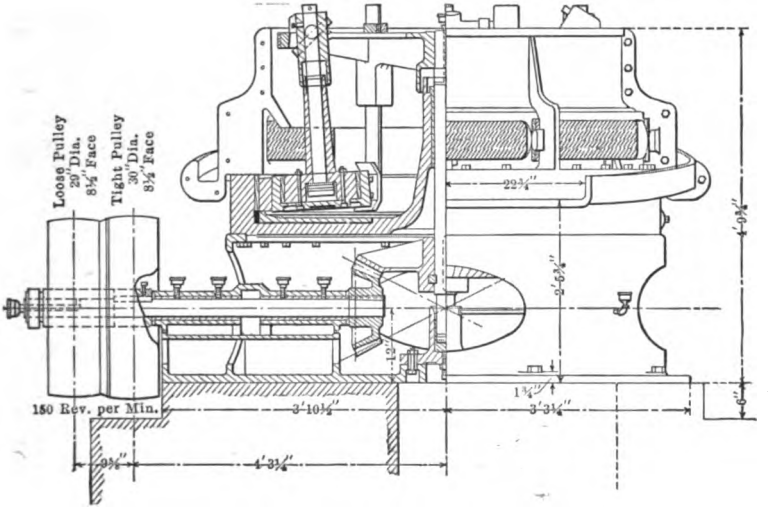

FIG. 94*a*. — IMPROVED HUNTINGTON MILL.

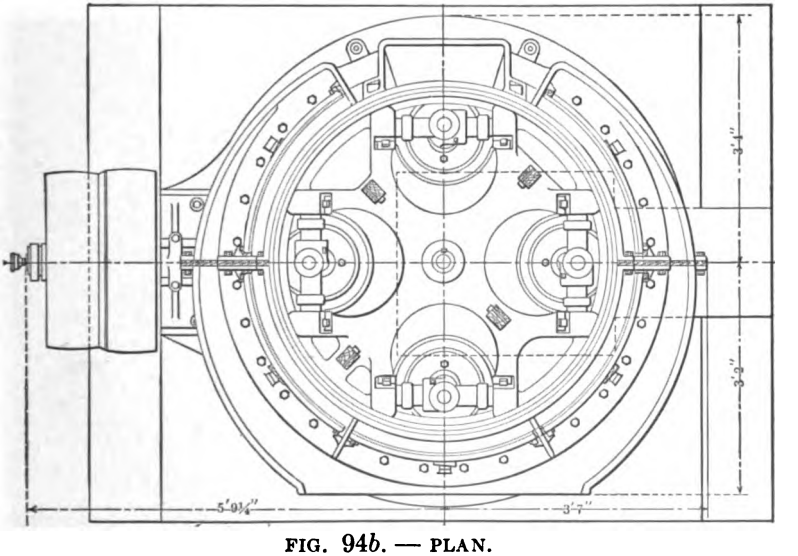

FIG. 94*b*. — PLAN.

on the same plan as in the stamp mill. An adjustable scraper is placed in front of each roller to break up the inner bank and throw the ore in front of the roller.

Since the machine has no means in itself of automatic control of a feeder and if overfed is liable to choke, it follows that it must be fed at a regular speed by an automatic feeder run independently. The feeding is done through a hopper at one side.

The advantages claimed for the mill, as compared with gravity stamps, are: Low first cost, less freight charges, small cost of erection, small amount of power, and that it is also a good amalgamator. The running cost, however, is high compared with rolls.

§ 225. HUNTINGTON MILLS IN GENERAL. — Two distinct types of Huntington mills are in use, the under-driven geared type and the over-driven mills. These mills are employed as primary and secondary crushers, the latter in conjunction with a stamp battery or roller mill. When it is used as a secondary crusher, and when dealing with large quantities, and crushing for amalgamation, the pulp should be distributed over two, three, or four plates instead of one, so as to afford ample amalgamation surface. Fine feeding, ¼ inch or less, when hard quartz is to be dealt with, gives best results.

Many object to the machines, urging that they are too troublesome and expensive in upkeep. This type of crusher has its distinct uses, especially when high freights have to be considered and when stamp mills are out of question.

§ 226. *Foundations.* — The present tendency is to do away with wooden frames and posts, and bolt the mill securely to a foundation composed of heavy timbers and concrete.

§ 227. *Feeding the Mill.* — With under feeding the mill becomes noisy, vibrates, and wears itself out. Over feeding reduces all noise until the belts break or come off, and the pulp packs in the center and along the screens and splashes over the sides. The mill requires less water than stamps and hence the pulp is liable to be too dilute. After a long series of experiments using Huntington mills in connection with stamps, best results were obtained with 28 mesh on the mortar and Nos. 35 and 32 on the Huntington; using two rollers the mortar screen was changed to No. 4 mesh. Using old and irregular shells was found to be false economy.

§ 228. *Screens for Huntington Mills.* — Table 46 gives a comparison of the capacities of two Huntington mills, A and B, of exactly the same size, and treating the same material under exactly the same conditions, with the exception of the fact that A was equipped with woven-wire rolled-slot screens, and B was equipped with punched-slot screens. The opening per square inch of screen area in the woven-wire screen is approximately 1.5 times as great as the opening in the punched-slot screen. Theoretically this should result in a more free discharge, a greater capacity, and a smaller quantity of slime. Because of the excessive blinding of the woven-wire screens, the above expected results were not obtained in practice. This blinding was persistent throughout the entire life of the screen.

TABLE 46. — CAPACITIES OF MILLS A AND B. A WITH WOVEN-WIRE SCREEN, B WITH PUNCHED PLATES.

Date 1905.	Rate. Pounds per 24 Hours.		Actual Pounds per 24 Hours.	
	Mill A.	Mill B.	Mill A.	Mill B
May 5	90,120	124,300	88,700	123,100
" 6	119,200	125,800	111,800	123,800
" 7	104,200	133,500	101,700	129,100
" 8	108,400	136,000	102,000	131,700
" 9	114,800	133,500	111,200	131,500
" 10	108,500	175,900	106,000	158,600
" 11	119,000	201,200	117,400	197,600
" 12	137,400	190,600	131,300	182,500
" 13	114,400	148,200	110,500	136,900
" 14	114,100	127,200	103,000	120,100
" 15	120,000	138,000	116,300	130,000
" 16	127,400	136,300	115,900	129,900
" 17	120,700	142,000	114,800	113,900
" 18	140,000	.....	124,800	.....
Total	.....	.....	1,555,400	1,818,700

As a result of this, the crushing of 58.43 tons per day in the mill equipped with woven-wire screens, required more attention from the mill man than it did to crush the 73.57 tons in the mill equipped with punched-slot screens. Ten screens of each sort were used, and the duration of the test was limited to

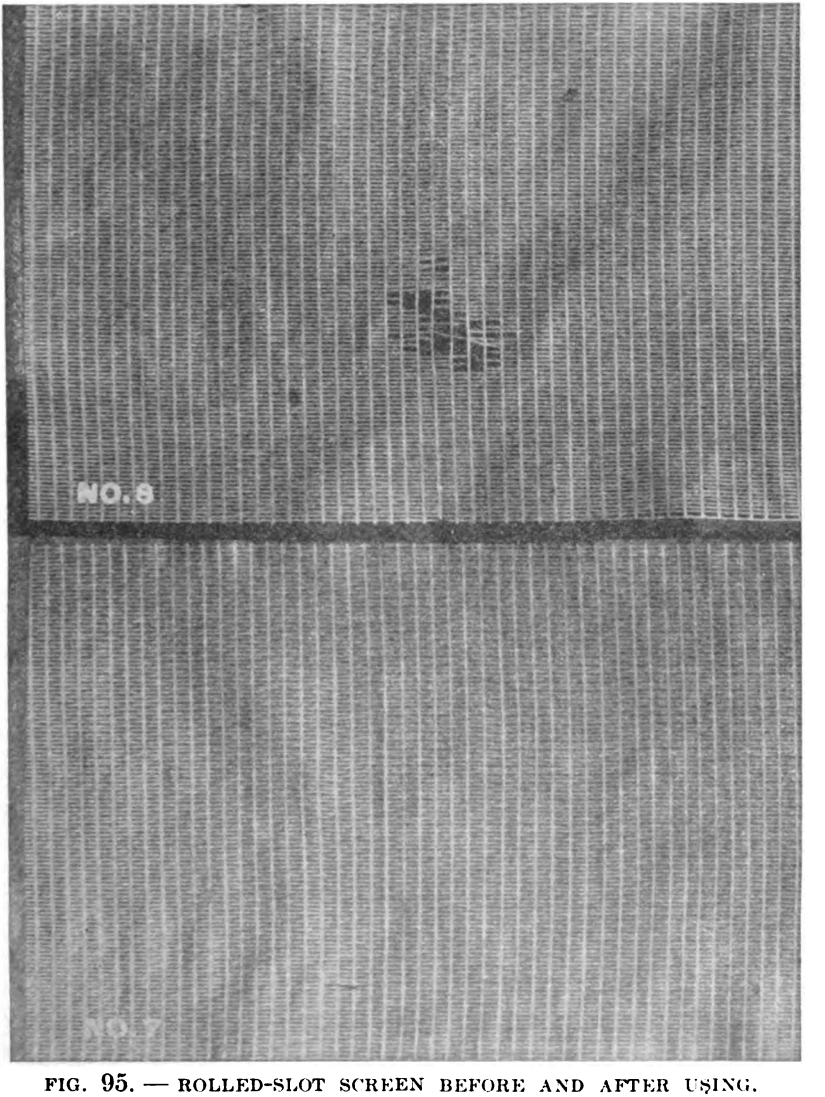

FIG. 95. — ROLLED-SLOT SCREEN BEFORE AND AFTER USING.

the life of the screens. The test lasted 13.31 days in the case of mill A, and 12.36 days in case of mill B. Fig. 95 shows the rolled-slot screen before and after the test, and Fig. 96 shows the punched-slot screen before and after.

Thus it will be noted that the average number of pounds per 24 hours was 116,860 in the case of mill A, against 147,140 pounds in the case of mill B; or the ratio A: B = 58.43 tons: 73.57 tons, or for every 2,000 pounds put through B, but 1,580 pounds were put through A. The wear of screens in case of mill A

was 0.005876 pounds per ton of ore crushed, and in case of mill B, 0.00762 pounds per ton of ore crushed. The woven-wire slot screens suffered a loss of 22.53% of their weight before being discarded and the punched plate suffered a corresponding loss of 26.45%. The average weight of a wire screen was 919 grams, and the average weight of a punched screen 1,187 grams.

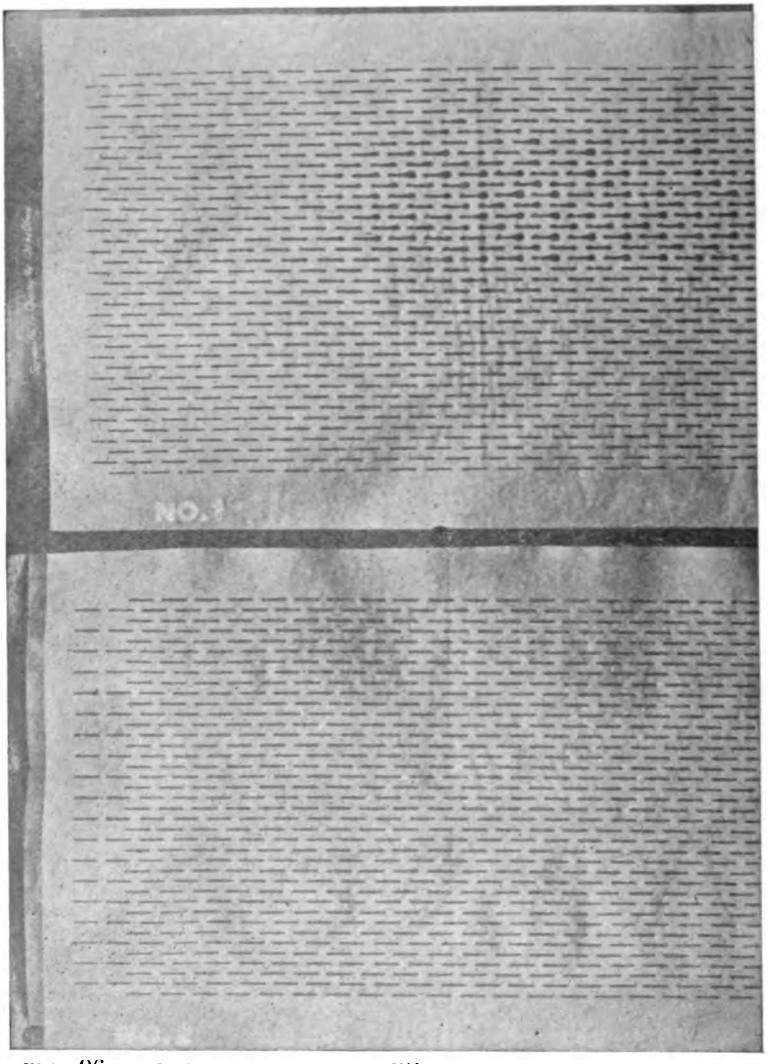

FIG. 96. — PUNCHED-SLOT SCREEN BEFORE AND AFTER USING.

Table 47 gives a sizing test in cumulative percents of feed to the Huntington mills A and B and of the ground product. This table shows conclusively that the two mills were receiving similar feed and delivering products crushed to the same size.

TABLE 47. — SCREEN SIZING TEST OF FEED AND PRODUCT OF HUNTINGTON MILLS A AND B.

	Feed to Huntingtons.		Ground Product Huntingtons.	
	A.	B.	A.	B.
On 6-mesh	0.19	0.10	.....	.....
" 8 "	0.47	0.30	.....	.....
" 10 "	2.13	1.70	.....	.....
" 20 "	57.88	54.27	7.29	13 53
" 40 "	90.96	90.20	46.28	47 78
" 60 "	96.07	95.92	59.97	60.27
" 80 "	98.40	98.40	70.68	70.31
" 100 "	99.16	99.40	77.34	77.21
" 150 "	99.44	99.60	80.79	80.09
" 200 "	99.72	99.80	85.87	85.33
Through 200 "	0.28	0.20	14.13	14.67

At Anaconda, screens with slotted holes 1 × 13 mm. are used in the Huntington mills. Cyril Parsons says that a Huntington mill consumes ten times as much screen as a 5-stamp battery. He further states that the life of diagonal slotted screens is 6 or 7 days.

§ 229. *Quality of Work done by Huntington Mills.* — Table 48 gives a sizing test of the feed to and crushed product from the Huntington mills in use at a large Montana concentrator.

TABLE 48. — SCREEN SIZING TEST OF FEED AND PRODUCT OF HUNTINGTON MILLS WITH ASSAYS.

Size Mesh.	Feed. Percent. Total Material.	Assay. Percent. Copper.	Discharge. Percent. Total Material.	Assay. Percent. Copper.
On 8-mesh	1.41	1.9	.....	.....
" 10 "	2.73	1.2	0.08	0.5
" 20 "	61.00	1.1	14.28	0.6
" 40 "	28.06	1.4	32.98	0.8
" 60 "	3.54	2.1	10.76	1.2
" 80 "	1.79	2.5	9.53	1.4
" 100 "	0.74	3.4	6.46	1.8
" 150 "	0.26	4.45	3.13	2.1
" 200 "	0.26	5.60	5.98	2.3
Through 200 "	0.21	6.63	16.80	2.5

Table 49 gives the results of careful sizing tests upon the pulp from Bryan mill, high-speed rolls, and Huntington mill, made at the mill of the Detroit Copper Company at Morenci, Arizona.

TABLE 49. — COMPARATIVE SCREEN SIZING TEST ON PULP FROM BYRAN MILL, HIGH-SPEED ROLLS, AND HUNTINGTON MILL.

Size Mesh.	Bryan Mill. Percent.	High-Speed Rolls. Percent.	Huntington Mill. Percent.
On 20-mesh	2.89	0.79	11.18
" 40 "	18.28	17.13	20.42
" 60 "	10.65	10.25	6.35
" 80 "	5.93	4.64	3.05
" 90 "	2.49	1.94	1.65
" 100 "	.....	.....	.....
" 120 "	5.04	5.07	3.52
" 150 "	2.23	1.79	1.09
" 200 "	2.77	3.05	1.38
Through 200 "	49.69	55.31	50.94

Screen on Bryan mill was 1½ mm., that on rolls 10-mesh, and on Huntington mill 2½ mm.

Life of Wearing Parts. — Die rings and roller rings are of steel. The average life of Latrobe and Midvale steel roller rings in the 5-foot mills is 32 days. Die rings of same material last 75 days. American Engineering Works' steel-roller rings last 26 days, and ring dies about 90 days.

Cyril Parsons gives Table 50, showing the life and cost of wearing parts of top-driven Huntington mill in use in Rhodesia.

TABLE 50. — LIFE AND COST OF WEARING PARTS FOR HUNTINGTON MILL, SOUTHERN RHODESIA.

Name of Part.	Life.	Weight. Founds.	Cost at Mine. Each.
Yoke	3 months	97	$33.53
Head shaft	4 "	232	42.77
Cap	5 "	.....	6.56
Ball races	4 "	.....	17.25
Shell	6 weeks	142	18.73
Die ring	8 "	610	65.14
Balls per doz.	6 months	.....	16.07

Attention is drawn to the high cost of spares as shown in this table. Shells wear from 1½ inches to ½ inch, and then crack and come off; if kept even, they wear longer. Die rings wear down from 2 inches to ¾ inch.

§ 230. *Cost of Crushing by Huntington Mills.* — Table 51 gives the cost of crushing by Huntington mills at a large Montana plant.

TABLE 51. — COST OF CRUSHING BY HUNTINGTON MILLS IN MONTANA PLANT.

	Total Cost.	Per Ton Crude Ore.	Ore to Huntington Mill.
Cost of supplies	$9,058.54	$0.0097	$0.0290
Labor cost of operating	12,819.11	0.0137	0.0401
Total cost	21,877.55	0.0234	0.0700

It should be said that these Huntington mills are used to re-crush middlings and have a capacity of about 75 tons in 24 hours.

The costs are given first, per ton of ore entering the mill; and secondly, per ton of material actually treated in the Huntington mill. That these figures are not in any way abnormal is shown in Table 52 which gives the costs for the years 1900, 1901, 1902, 1903, and 1904.

TABLE 52. — COST OF CRUSHING BY HUNTINGTON MILLS AT MONTANA MILL.

	Tons Crude Ore.	Estimated Tons to Huntingtons.	Cost per Ton Crude Ore.	Cost of Ore per Ton to Huntingtons.
Year 1900	420,401.5	140,500	$0.0238	$0.0712
" 1901	443,132.5	148,100	0.0258	0.0772
" 1902	701,126	234,000	0.0276	0.0827
" 1903	828,655	277,000	0.0261	0.0781
" 1904	936,255	313,000	0.0234	0.0700

The results of experiments with thousands of tons of average Butte ores show that the 6-foot Huntington mill handles fully twice as much as the 5-foot mill, and is less trouble to keep in repair.

Details of comparative operating expenses are shown below.

	5-foot Mill.	6-foot Mill.
Operating labor	$0.0156 per ton	$0.0156
Repairs "	0.0078	0.0052
" supplies	0.0374	0.0307
Power	0.0201	0.0134
	$0.0809 per ton	$0.0649 per ton

The following figures on the estimated cost of crushing by a Huntington mill are given. Since the items may vary widely, it is obvious that these figures should not be too generally applied.

The estimated cost per ton for a 3½-foot mill crushing through $\frac{1}{40}$-inch (0.63 mm.) screen at the rate of 15 tons per 24 hours is: Die ring, 2.303 cents per ton; rollers, 3.939; power ($40 per 308 days at 100 tons per day), 0.129; screens, 0.939; attendance ($\frac{1}{10}$ man at $3), 0.300; repairs, oil, etc. ($100 per year), 2.165; total, 7.180 cents per ton.

§ 231. THE GRIFFIN ROLLER MILL. — This consists of a single roller (31), suspended upon a vertical axis (1), rolling upon the inside of a die ring (70). (See Fig. 97.) Power is applied by a belt to a 30-inch pulley (17), revolving in a horizontal plane and placed centrally over the ring. The pulley has two journals (27) and (26), attached above and below respectively, on which it runs; the supporting step or collar (21) is below the lower bearing; the axis of the roller passes up through the lower journal and is attached to the center of the pulley by a universal joint (9), enabling it to receive rotation from the pulley and also to gyrate in its path around the die ring.

The 30-inch mill weighs 10,500 pounds. The die ring is 30 inches inside diameter and weighs 250 pounds; the roller is 18 to 20 inches in diameter and its shell weighs 100 pounds. The width of contact between roller and die ring is 6 inches. Under the roller are placed plows (5), to keep the ore stirred up. The die ring and shell last 8 to 10 days of 24 hours on the hardest quartz. On phosphate rock they last 7 months of 24-hour days. The plows last the same length of time as the ring and shell. The roller revolves 190 to 200 times per minute on its own axis. The crushing operation is started by pushing the revolving roller out of line until it touches the ring. It immediately bites upon the surface of the latter and the roller then rolls around on the inside of the die ring exerting a pressure, said to be 6,000 pounds, upon it. The number of gyrations per minute of an 18-inch roller will be from 285 to 300 calculated, according to the formula $N = \frac{D}{d}$ where D is the inside diameter of the ring, d is the outside diameter of the roller and N is the number of revolutions of the roller on its own axis for one gyration.

The curious fact will be noted that when the roller rotates to the right it will be found to gyrate backward or to the left. The machine is not balanced and therefore requires a very solid foundation; 15 to 25 horse-power are required, according to the work it does.

The mill is fed with stuff 1½ inches maximum diameter from a breaker and is constructed for dry or wet crushing. When used for dry work it has fans (7) attached to the suspending rod (1) over the roller which force a current of air out through the screen to the screw conveyor below and dust chamber. When used wet it has a screen placed all round the mill at a level just above the die ring. The mill is found to crush finer than this screen would indicate, for when a 16-mesh screen was used, 90% of the pulp passed through 60-mesh screen. The 30-inch mill crushed per hour 3 to 4 tons of phosphate rock and 1½ to 2½ tons of Portland cement or hard quartz according to the size.

G. A. Barnhart gives screening test when using 30-mesh screen on gold ore, at Mammoth, Arizona: Through 30 on 40 mesh, 3.90%; through 40 on 60 mesh, 33.62%; through 60 on 80 mesh, 5.54%; through 80 on 100 mesh, 0.67%; through 100 mesh, 56.27%.

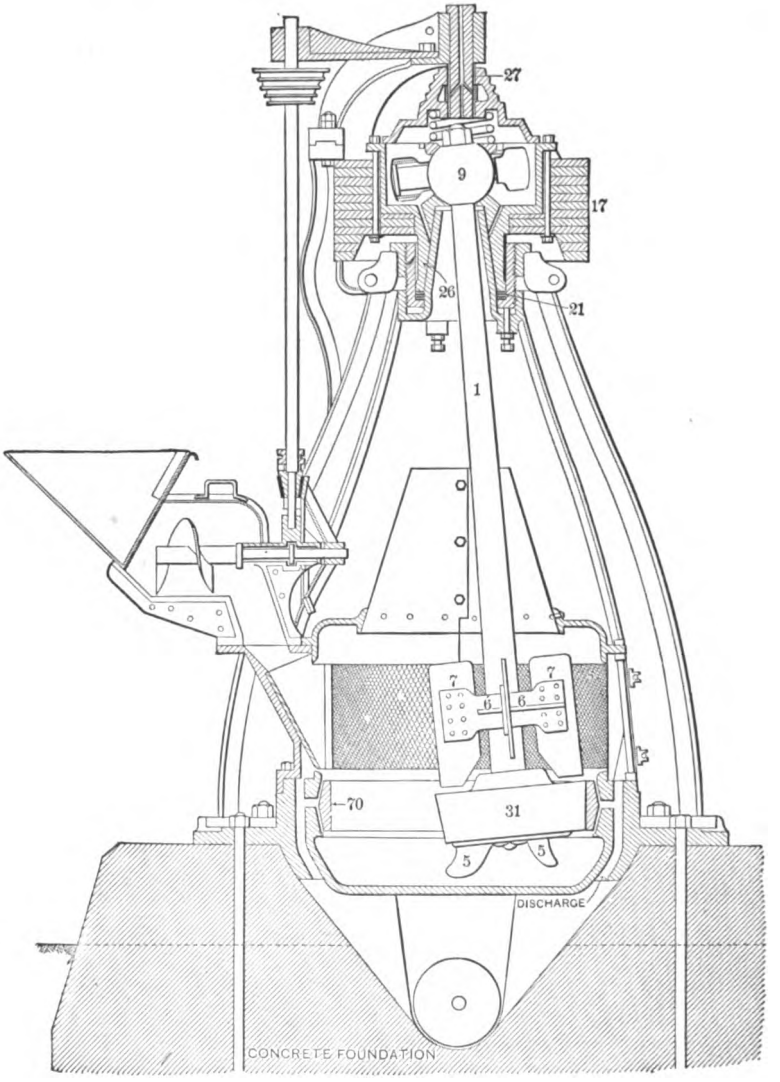

FIG. 97. — SECTIONAL VIEW OF 30-INCH GRIFFIN MILL ARRANGED FOR DRY PULVERIZING.

J. R. de Lamar says that when fed by breaker each mill crushed 20 tons of the hardest rock in 24 hours to 40 mesh and finer without screening. The screen used was 4 mesh. The mill makes excellent pulp for cyanide leaching, better than either rolls or stamps. With rolls the tailings ran $4.65; with Griffin mill they ran from $0.89 to $1.65 per ton.

Parkhurst & Whipple say it crushes 40 to 50 tons per day of Breckenridge,

Colo., ore, with a cost of wearing parts not to exceed 10 cents per ton. F. M. Johnson, Gunnison, Colo., and J. H. Edwards, Morrisville, Va., both say running cost will not exceed that of a stamp mill.

Swing-hammer Pulverizers.

§ 232. The swing-hammer pulverizer depends on a blow struck in space to effect crushing. It is successfully used to crush or pulverize substances of hardness from that of bones to that of granite; and to shred bark and asbestos. Its essential features, when intended for crushing or pulverizing, are shown in Fig. 98*a* and Fig. 98*b*. The beater arms *B* are hinged by the steel rod *R*, which

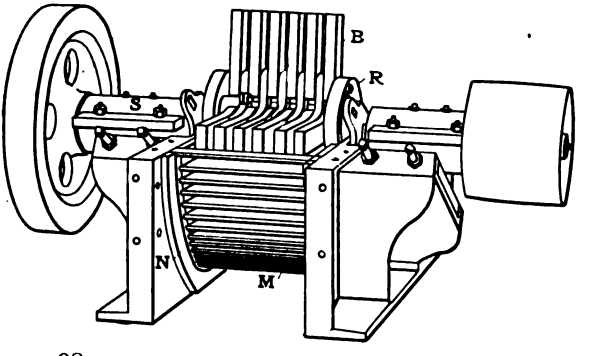

FIG. 98*a*. — SWING-HAMMER PULVERIZER. HOUSING REMOVED.

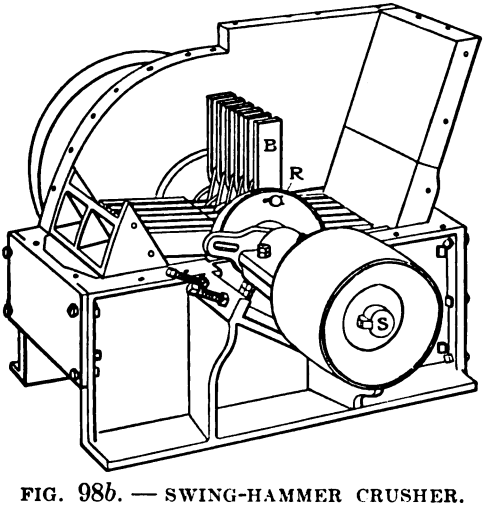

FIG. 98*b*. — SWING-HAMMER CRUSHER.

has a head at one end and a collar and cotter at the other, to the spider *D*, driven by the shaft *S*, revolving at speeds varying from 700 to 1,500 revolutions per minute. The screen bars are seen at *M* and are held in position by the spacing racks *N*. These racks may be removed and changed to vary the distance between the screen bars. A cast-iron screen is used when crushing hard rock in which the openings are arranged at such an angle that the material

being treated is constantly deflected to the center of the screen. The dry feed enters the machine at the top, at such a point that it is struck downwards by the beater arms as it enters, and none of it is ejected except through the screen below. When an extreme degree of fineness is desired, the screen is replaced by cast-iron plates, and the pulverized material is blown out of the mill by an air blast, the machine itself acting as the blower. This mill is giving satisfaction for reducing bituminous rock, coal, graphite, limestone, shells, and bark. Table 53 gives details as to the capacities, horse-power, etc.

TABLE 53. — SIZES, CAPACITIES, ETC., OF HINGED-HAMMER CRUSHER.

Size.		Materials.	Tons Hourly Capacity.	Screen Opening.	Horse-power.	Mesh Finished.
Spider.	Arms.					
18 in.	9 in.	Soft bricks	½	¼ in.	6	40% through 24
30 "	15 "	Hard bricks	3	½ "	25	50% " 16
42 "	36 "	Vitrified bricks	12	¾ "	80	50% " 16
18 "	9 ft.	Dry bones	½	$\frac{1}{16}$ "	6	75% " 20
36 "	30 in.	Culm	50	1 "	80	through ½ in.
42 "	48 "	Bituminous coal	100	1 "	100	through ½ in.

CHAPTER VII.

LAWS OF CRUSHING.

In discussing this question of crushing under different conditions there are four lines to be considered:

(*a*) Nature of the material crushed.
(*b*) Extent of crushing desirable.
(*c*) Work or power required for crushing.
(*d*) Comparison of various machines.

§ 233. NATURE OF THE MATERIAL CRUSHED. — The variable amount of energy consumed in crushing is not due entirely to a difference in hardness of the rocks. Lamination, crystallization, and other physical properties may have so pronounced an influence as to be misleading if the hardness of the rock is alone considered. A soft mineral occurring in association with a hard one, offers a line of less resistance until the size is reduced so small as to necessitate the comminution of the harder constituent. Thus we may have a case of easy coarse crushing and of difficult fine crushing. The presence of moisture and the temperature of the ore both have their effect upon the resistance offered to crushing.

§ 234. COMPRESSIVE STRENGTH OF STONE. — It has been found that the compressive strength of stone does not depend so much upon the size of the specimen as upon the shape. Specimens of the same material of different size but having similar shape show the same compressive strength per square inch. The maximum strength is obtained when the sample has smooth faces which bear evenly against smooth crushing faces in the machine. This is the reason why jaw plates of Blake breakers are made with corrugations upon them. It makes little difference in the compressive strength whether the rock is crushed wet or dry, but frozen rock is weakened. Rock that has been heated and subsequently cooled often shows a decrease in compressive strength of as much as 40%. Stratified rocks are much weaker when the compressive force is applied parallel to the bedding planes than when the force is applied in a direction perpendicular to these planes.

§ 235. *German Tests.* — Very exhaustive sets of tests on various rocks under different conditions have been made abroad at Munich and Berlin. Summaries of them are given in Tables 54 and 55. Including so many tests, as they do,

TABLE 54. — SUMMARY OF TESTS AT BERLIN.

Class of Stone.	Number of Stones Tested.	Compressive Strength in Pounds per Square Inch.		
		Maximum.	Minimum.	Average.
Sandstone	219	28,218	1,223	7,894
Limestone	258	30,280	768	8,648
Granite	134	28,659	4,850	17,537
Quartzite	11	24,250	8,377	13,754
Porphyry	91	48,216	3,883	26,327
Basalt	8	28,659	11,904	21,349
Diorite	6	21,818	8,818	13,754
Slate	20	15,645	7,936	11,194
Serpentine	4	25,374	14,109	17,840
Trachyte	9	15,546	4,409	8,704
Augite	6	22,046	5,959	12,530

TABLE 55. — SUMMARY OF TESTS AT MUNICH.

Class of Stone.	Number of Stones Tested.	Compressive Strength in Pounds per Square Inch.		
		Maximum.	Minimum.	Average.
Sandstone	176	29,862	1,322	6,704
Limestone	41	22,752	1,450	10,811
Granite	41	31,426	7,750	18,754
Dolomite	12	18,486	5,546	10,764

they are of great value. These tests were made on cubes which were as a rule 6 cm. in diameter. The great differences shown between the maximum and minimum are to be expected when one considers that the stones tested came from different localities and varied greatly in quality. Where stones from only one locality are tested, no such differences occur. All the values are for stones that are air dry. In the original reports, however, values are given in many cases for the strength when wet and also when frozen both in air and in water. There is little difference between wet and dry, but frozen stone almost always runs a little lower in strength per square inch than that which is not frozen. In many cases the transverse strength was taken. This was generally found for square beams to be considerably less than half of the compressive strength. The relative strength of cubes and prisms of a sample of sandstone and also of limestone, both air dry, are shown in Table 56.

TABLE 56. — STRENGTH OF CUBES AND PRISMS TESTED AT BERLIN.

Kind of Rock.	Size of Piece Tested.* cm.	Number of Tests.	Compressive Strength in Pounds per Square Inch.		
			Maximum.	Minimum.	Average.
Sandstone	10x10x6	10	18,931	17,907	18,476
Sandstone	6x6x6	10	15,218	13,227	14,451
Sandstone	10x10x50	10	12,673	7,922	10,041
Limestone	7 1x7.1x4	10	12,672	12,047	12,360
Limestone	6x6x6	10	8,818	8,164	8,448
Limestone	10x10x50	5	6,742	6,343	6,528

* The length is given last.

Table 57 shows how in stratified rocks the strength is less when they are tested parallel than when tested perpendicular to the bedding planes.

TABLE 57. — STRENGTH PARALLEL AND PERPENDICULAR TO THE BEDDING PLANES, TESTED AT BERLIN.

Kind of Rock.	Direction of Pressure.	Size of Piece Tested.* cm.	Number of Tests.	Compressive Strength in Pounds per Square Inch.		
				Maximum.	Minimum.	Average.
Slate	Parallel to bed	6x6x6	10	10,582	7,936	8,932
Slate	Perpendicular to bed	6x6x6	10	15,645	11,677	13,455
Limestone	Parallel to bed	6x6x6	10	5,860	4,438	5,220
Limestone	Perpendicular to bed	6x6x6	10	6,187	5,063	5,703
Limestone	Parallel to bed	10x10x6	8	6,329	5,632	5,888
Limestone	Perpendicular to bed	10x10x6	10	7,922	6,742	7,240

* In the case of prisms the length is given last.

Four examples to show how the strength decreases when rock is heated and cooled are given in Table 58. These tests were all made on cubes 5 or 6 cm. in diameter.

TABLE 58. — STRENGTH BEFORE AND AFTER HEATING, TESTED AT BERLIN.

Kind of Rock.	How Tested.	Number of Tests.	Compressive Strength in Pounds per Square Inch.		
			Maximum.	Minimum.	Average.
Granite	Before Heating	10	18,305	16,541	17,551
Granite	After heating 8 hours and slowly cooling ..	10	12,758	9,700	10,937
Limestone..	Before heating	10	30,280	25,217	27,550
Limestone..	After heating 3 hours and slowly cooling ..	10	22,842	20,140	21,903
Limestone..	After heating 3 hours and cooling in water.	10	21,733	18,234	20,055
Sandstone..	Before heating	10	16,314	14,637	15,389
Sandstone..	After heating 8 hours and slowly cooling ..	5	13,000	11,781	12,388
Sandstone..	After heating 8 hours and cooling in water.	5	11,905	10,995	11,378
Porphyry ..	Before heating	10	37,108	32,183	35,045
Porphyry ..	After heating and slowly cooling	5	29,186	24,008	26,256
Porphyry ..	After heating and cooling in water	5	26,028	19,130	22,273

§ 236. EXTENT OF CRUSHING DESIRED. — At first sight it would seem desirable to crush rock down to a size which shall be equal to the size of the smallest particle of valuable mineral. This would ensure perfect separation. In practice, however, there are several objections to this plan. It causes all the coarser particles of valuable mineral and gangue which were unlocked at larger sizes, to be crushed unnecessarily, thereby using an extra amount of power and causing an increase in the amount of slimes which are difficult to separate and which cause loss. This trouble of slimes is aggravated by the fact that in a majority of cases the valuable mineral is softer than the gangue, and hence slimes more. This is shown in the following sizing test.

The test given is of a coarsely crushed Missouri galena-blende ore. The galena appears to be crushed finer than the quartz gangue while the blende appears to be crushed coarser.

	Ore.	Galena.	Blende.
	%	%	%
On 4 mesh (over 5.1 mm.)	25.0	11.5	16
Through 4 on 8 mesh (5.1 to 2.42 mm.)	31.1	10.0	40
Through 8 on 10 mesh (2.42 to 1.85 mm.)	4.9	7.8	4
Through 10 on 20 mesh (1.85 to 0.85 mm.)	3.8	10.0	16
Through 20 on 30 mesh (0.85 to 0.535 mm.)	7.3	25.0	8
Through 30 on 40 mesh (0.535 to 0.374 mm.)	4.3	5.0	4
Through 40 on 80 mesh (0.374 to 0.171 mm.)	1.4	0.7	4
Through 80 on 100 mesh (0.171 to 0.139 mm.)	7.0	10.0	4
Through 100 mesh (0.139 to 0 mm.)	15.0	20.0	4
Total	99.8	100.0	100

The total power required to crush increases as rapidly as the size of the product decreases. At each crushing act more or less comminution is bound to take place. Thus the more times an ore is subjected to the crushing action, the greater is the proportion of fine dust. Not only is this fine material usually undesirable for subsequent treatment, but, in producing it, much power is consumed.

WORK REQUIRED FOR CRUSHING.

§ 237. RITTINGER'S THEORY. — Rittinger has proved mathematically that the work of crushing is proportional to the reduction in diameter. Assume a homogeneous 1-inch cube which requires A foot pounds of work to divide it on a plane parallel to one of its faces. To divide it into eight $\frac{1}{2}$-inch cubes requires 3 planes (see Fig. 99), and work is $3A$ foot pounds; twenty-seven $\frac{1}{3}$-inch cubes requires 6 planes (see Fig. 100), and the work done is $6A$ foot pounds.

Thus in dealing with irregular particles, the theoretical cube is taken as the basis of surface measurements. Where a prevailing shape of the particles is

so well known and so constant as to make it safe to allow for this quality, a constant factor, K, may be used which represents the ratio between the surface of a mass of ore, consisting of particles that will pass a given rectangular opening, and the same mass existing in such theoretical cubes as will just pass the same opening. Such a relation gives K a value between 1.2 and 1.7.

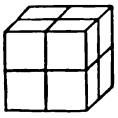
FIG. 99.

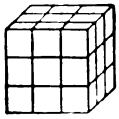
FIG. 100.

If a 1-inch cube is cut into eight ½-inch cubes, and if A represents the work necessary to reduce 1 square inch of fracture, then the work done would be represented by $3A$. If K be taken as above described, then $3KA$ represents the work done in breaking each cubic inch of irregular ore from a size that would pass a 1-inch screen to a size that would pass a ½-inch screen. Thus KA, wherever K is constant and known, can be used throughout the discussion in place of A. If n represents the number of pieces produced out of the linear dimension of the original piece, then $(n-1)$ represents the number of parallel planes in any one direction and $3(n-1)$ would represent the total number of planes. Therefore $3A(n-1)$ represents the work of fracturing a 1-inch cube into any number of smaller cubes. Applying this to any cube where D is the diameter of the original cube and d the diameter of the smaller resulting cubes in linear units, n becomes $\frac{D}{d}$. In making one cut through this cube, the area of fracture would be D^2 and our formula now becomes, $3AD^2\left(\frac{D}{d}-1\right)$ equals the work done in fracturing any cube into any number of smaller cubes.

The number of original cubical pieces contained in one cubic inch (whether more or less than one) is $\frac{1}{D^3}$. Thus the work per cubic inch for any size cube, reduced to any smaller sized cube is

$$\frac{1}{D^3}\,3AD^2\left(\frac{D}{d}-1\right)$$

or,

$$3A\left(\frac{1}{d}-\frac{1}{D}\right)$$

or for any irregular particle where K is known,

$$3KA\left(\frac{1}{d}-\frac{1}{D}\right).$$

As an application of this formula let us assume a 20 horse-power engine is crushing a certain amount of ore, reducing it from 2-inch size to ½-inch size, and it is required to estimate the horse-power necessary to crush from the same size to $\frac{1}{32}$ inch instead of ½ inch. The value of $3A$ may be taken as constant where the ore is uniform and the crushing appliances equally efficient. Then:

$$20 : x :: 3A\ (\tfrac{1}{2}-\tfrac{1}{4}) : 3A\ (\tfrac{1}{32}-\tfrac{1}{4})$$
$$x = 84 \text{ horse-power.}$$

When it is desired to show the power necessary to crush a given weight of ore, the specific gravity, S, of the ore, or the number of cubic inches of solid rock contained in a ton of ore, must be known. As there are $\frac{55{,}320}{S}$ cubic inches

in a ton of substance having a specific gravity of 1, there will be 55,320 cubic inches of solid rock in a ton of ore whose specific gravity is S. Thus the work of crushing such an ore would be

$$\frac{55{,}320}{S} 3A \frac{1}{d} - \frac{1}{D} \text{ foot pounds per ton.}$$

or,

$$\frac{\frac{55{,}320}{S} 3A \frac{1}{d} - \frac{1}{D}}{33{,}000 \times 60} \text{ horse-power hours per ton.}$$

or, simplifying still further,

$$A \frac{0.08382}{S} \left(\frac{1}{d} - \frac{1}{D}\right) = \text{horse-power hours per ton.}$$

To find this value A, it is necessary to crush some of the ore in question, measuring the horse-power hours per ton and carefully sizing the crushed product. This done it is a simple matter to substitute in the formula to obtain A. For D we should substitute the diameter of the average grain in the feed and for d the diameter of the average grain in the crushed product as determined by sizing tests. The value found for A in any case makes a standard of comparison for crushing the ore to any other size or in any other machine, and is a figure that should be equaled or improved in further work upon the same ore, or the reason why this cannot be done should be ascertained.

In order to further illustrate the method of finding the factor A for any ore the following example will be given. I have a sample of the ore which has been crushed by a Blake breaker set at 1½ inch. I will first make a sizing test on this sample. The result is shown in Table 59.

TABLE 59. — SIZING TEST OF PRODUCT FROM BLAKE BREAKER.

Diameter in Inches.		Average Size. Inches.	Percent.	Product Average Size by Percent.	Diameter Average Grain.
Through.	On.				
2	1½	1.75	15	26.25	
1½	1	1.25	23	28.79	
1	0.9	0.95	4	3.80	
0.9	0.8	0.85	7	5.95	
0.8	0.7	0.75	9	6.75	
0.7	0.6	0.65	6	3.90	
0.6	0.5	0.55	7	3.84	
0.5	0.4	0.45	6	2.70	
0.4	0.3	0 35	6.5	2.27	
0.3	0.2	0 25	6	1.25	
0 2	0.1	0.15	5	0.75	
0 1	0.0	0.05	5.5	0.28	
Totals.....	.....	.....	100.0	86.53	= 0.8653

It is evident from Table 59 that the average size grain in the sample is about 0.87 inch in diameter. For making the test I shall use a pair of 14 × 27-inch rolls run from a countershaft by an electric motor. These rolls have a peripheral speed of 320 feet per minute and are set 0.450 inch apart. They are fed up to their full capacity or at the rate of about 15 tons per hour and I find by power measurements that the net power consumption is 8 horse-power. Table 60 shows a sizing test of the resulting product.

TABLE 60. — SIZING TEST OF ROLL-CRUSHED PRODUCT.

Diameter in Inches.		Average Size. Inches.	Percent.	Product Average Size by Percent.	Diameter Average Grain.
Through.	On.				
0.600	0.450	0.525	22.38	11.73	
0.450	0.298	0.374	34.92	13.05	
0.298	0.222	0.260	10.32	2.69	
0.222	0.147	0.184	9.84	1.81	
0.147	0.108	0.127	3.97	0.51	
0.108	0.085	0.096	3.97	0.38	
0.085	0.000	0.042	14.60	0.61	
Totals.....	.....	.....	100.00	30.78	0.3078

Thus we see that the size of the product has been reduced from an average size of 0.87 inch to an average size of 0.31 inch with a net expenditure of 8 horse-power. Now if in the formula, $A \frac{0.08382}{S}\left(\frac{1}{d} - \frac{1}{D}\right)$ = horse-power hours per ton, we substitute for S the specific gravity of the ore which is 3, and for d 0.31 inch, and for D 0.87 inch the horse-power hours per ton being 8 divided by 15 or 0.5325 we get for the value of A, 9.18. This value is fairly constant with any ore and is of value if we wish to compare two types of machines working on the same ore or wish to compute the power that will be required to crush from some other size or the same size to some size coarser or finer than the example given using the same machine or machines of equal efficiency.

§ 238. VON REYTT'S TESTS. — Von Reytt has shown by a very exhaustive series of tests that the ratio of work done to increase the surface is fairly constant with coarser sizes, but that with fine sizes the increase of surface is much more rapid than the increase of work required to produce it. This may hold for many ores but where we have a soft mineral occurring in association with a hard one, it has often been found that the rock crushes easily until the size is reduced so small as to necessitate the comminution of the harder constituent. Thus it is possible to have a case of easy coarse crushing and difficult fine crushing.

§ 239. THE AUTHOR'S TESTS. — The author made 19 tests of various weights of pure quartz rock (specific gravity 2.640), ranging from 277 to 991 grams, to get at the average pressure to be exerted in crushing by rolls. Incidentally some figures were obtained on work required in crushing. The samples had been crushed in a Blake breaker set at 1½ inches and all below 0.393 inch (10 mm.) was screened out. Each sample was placed between the faces of the Olsen vertical testing machine, the particles being spread out so as not to interfere with one another, and the sample was gradually crushed until the distance between the faces of the machine was ½ inch. The pressure exerted was read at various intervals and at the same time the distance between the crushing faces noted. The pressures were all reduced by proportion so as to read for one pound of quartz, these results plotted, their averages calculated, and from them an average curve drawn as shown in Fig. 101. The lines connecting consecutive points of each test are omitted for sake of clearness. From this curve can be seen at a glance the average pressure acting at any point during the compressing.

To apply these results to the case of rolls, an average pair of rolls was assumed, 24 inches in diameter, running at a peripheral speed of 600 feet per minute (95½ revolutions), and crushing 100 tons of quartz rock per 24 hours from 1½ to ½ inch, that is, they are set ½ inch apart. Then for various values of the angle T (see Fig. 102), measured up from the horizontal, the distance d between the rolls will be as shown in Table 61.

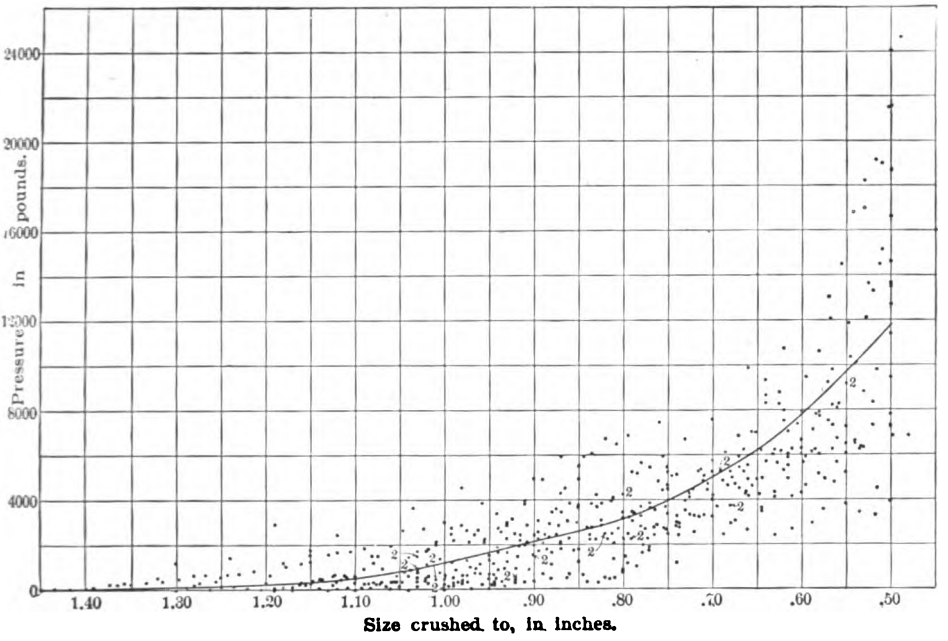

FIG. 101. — DIAGRAM OF CRUSHING TESTS.

TABLE 61. — DISTANCES BETWEEN THE ROLLS FOR VARIOUS ANGLES.

Value of T.	Distance Between Rolls.	Value of T.	Distance Between Rolls.	Value of T.	Distance Between Rolls.
Degrees.	Inches.	Degrees.	Inches.	Degrees.	Inches.
16	1.487	10	0.878	4	0.560
15	1.364	9	0.805	3	0.534
14	1.250	8	0.741	2	0.515
13	1.142	7	0.684	1	0.505
12	1.047	6	0.636	0	0.500
11	0.958	5	0.593		

The diameter of the rolls being 24 inches, 1° of arc corresponds to $\frac{24 \times n}{360}$ or 0.20944 inches. The amount of ore upon 1° of the circumference where the rolls crush 100 tons per 24 hours (138.9 pounds per minute), and run at a peripheral speed of 660 feet per minute will be

$$\frac{100 \times 2{,}000 \times 0.20944}{24 \times 60 \times 600 \times 12},$$

or 0.00404 pounds.

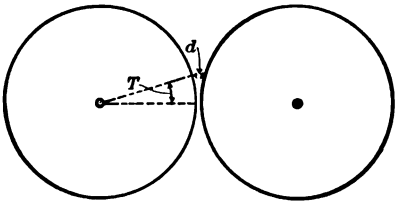

FIG. 102.

From Table 61 the average horizontal distance between the rolls for each degree counting upward from the horizontal may be calculated and it is shown in the second column of Table 62. The pressures for 1 pound of quartz for each of these distances may be obtained from Fig. 101 and, reduced to correspond to 0.00404 pounds, are shown in the third column of Table 62. The fourth column shows the horizontal distances

TABLE 62. — COMPUTATION OF WORK FOR CRUSHING.

Number of the Degree of Arc Counting from the Horizontal.	Average Distance Between Rolls.	Average Load for each Degree.	Horizontal Distance Passed Through per Degree.	Total Horizontal Distance per Minute.	Work Done per Minute.
	Feet.	Pounds.	Feet.	Feet.	Foot Pounds.
16th	0.1188	0.20	0.0099	340.362	63.3
15th	0.1089	0.60	0.0092	316.296	189.8
14th	0.0997	1.01	0.0085	292.230	295.2
13th	0.0912	1.22	0.0077	264.726	323.0
12th	0.0835	4.84	0 0070	240.660	1,164.8
11th	0.0765	7.87	0.0064	220.032	1,731.7
10th	0.0701	11.35	0.0057	195.966	2,224.2
9th	0.0644	15.17	0.0050	171.900	2,607.7
8th	0.0594	19.39	0.0044	151.272	2,933.2
7th	0.0550	24.14	0.0038	130.644	3,153.7
6th	0.0512	29.63	0.0032	110.016	3,266.4
5th	0.0480	35.35	0.0024	82.512	2,916.8
4th	0.0456	40 00	0.0019	65.322	2,612.9
3rd	0.0437	43 63	0.0012	41.256	1,800.0
2nd	0.0425	46 05	0.0006	20.628	949.9
1st	0.0419	47.26	0.0002	6.876	325.0
Total		327.77			26,557.6

through which the forces act when the rolls revolve through 1°, and the fifth column gives the total horizontal distances through which the forces act per minute with the rolls running at 95½ revolutions, or 600 feet peripheral speed per minute. The sixth column, giving the foot pounds of work done on each degree of arc per minute, is obtained by multiplying the third column by the fifth. The sum gives the total foot pounds per minute and divided by 33,000 gives the horse-power which is 0.805. The sum of the third column amounting to 328 pounds is the average pressure exerted by the journals of the rolls in crushing. These figures may be somewhat lower than those obtained in practical running owing to the fact that in the tests the pressure was applied very gradually. It is a known fact that where the pressure is applied quickly, the strength of a sample increases until it is sometimes double.

It should be noted that the 0.805 horse-power is brought up to the 5 to 10 horse-power used by rolls in practice, by the journal friction, and the 328 pounds pressure of springs is brought up to the 5,000 to 10,000 pounds pressure supposed to exist in practice, by the variation in the work. At one instant the rolls are idle, at the next they may be asked to do many times the average work.

Sizing tests of the products of some of the tests were made and are as follows:

Test No.	1	2	3	4	10	11	19
Weight in grams	528	594	667	631	363	379	297
	%	%	%	%	%	%	%
On 2 mesh	27.76	35.35	26.17	22.38	25.62	24.60	37.84
Through 2 on 3 mesh	32.70	35.61	31.88	34.92	48.48	39.42	32.77
Through 3 on 4 mesh	10.84	7.47	12.78	10.32	6.89	8.20	9.80
Through 4 on 5 mesh	6.08	4.71	6.32	6.98	4.96	5.82	4.73
Through 5 on 6 mesh	3.04	2.69	3.19	2.86	1.93	2.65	2.03
Through 6 on 8 mesh	3.42	2.86	4.02	3.97	2.48	3.18	2.70
Through 8 on 10 mesh	3.61	2.53	3.77	3.97	2.20	3.44	2.03
Through 10 mesh	12.54	8.75	11.86	14.60	7.44	12.70	8.11
Total	99.99	99.97	99.99	100.00	100.00	100.01	100.01

§ 240. POWER LOSSES. — The power consumed in crushing is distributed as follows:

A. In the machinery.

(1) In transmission to the machine.

(*a*) Friction in the bearings.
(*b*) Friction in flexible belts, etc.
(*c*) Circulation and friction of air at all moving parts.
(*d*) Forms of energy other than heat; as electricity, sound, etc.

(2) In the machine and foundations.
(*a*) Friction in bearings.
(*b*) Air friction and circulation.
(*c*) Vibration of foundation.
(*d*) Forms of energy other than heat; as electricity, sound, etc.

B. Upon the ore.

(1) Between the fragments.
(*a*) Friction resulting in heat.
(*b*) Sound, light, etc.

(2) Within the fragments.
(*a*) Plastic deformation.
(*b*) Unrecovered elastic deformation.
(*c*) Rupture.
(*d*) Production of dust.

The friction of the machines depends upon their construction and the care received. Protection from dust, use of proper lubricants and belting, the alignment of shafting, and the care of bearing parts, all have their effect on the loss of power by friction. If these details are properly observed, the loss of power need not exceed 10%.

The loss of power among the ore particles is much greater than that due to the friction of the machinery. The force resistant to crushing is simply the cohesion of the mineral, but instead of pulling the fragments asunder, our machines compress them. Thus shearing becomes confused with compression and compression in part becomes tension, until crushing becomes an indefinite action in which only certain resultant forces prevail. For this reason considerable friction is produced which is of two kinds: external friction (among the fragments), and internal friction (molecular). The surface friction among the particles is lessened by a free discharge of the crushed ore as it becomes reduced to the size wanted. In the case of a reciprocating jaw breaker, the loss of power from this cause would be much reduced by having exactly the right amplitude for the quantity of ore between the jaws at any one time and by having sufficient voids between the fragments to provide a place for the crushed particles. The latter is effected by sizing before crushing.

The internal or molecular friction is made evident by the plastic deformation of the ore. Deformation is the adaptation of the ore under stress, without breaking, to new shape. If the ore retains its new shape after the force is removed, the ore has undergone plastic deformation; if the ore returns to its former shape, it has undergone elastic deformation. Give time enough and it will yield appreciably in any direction. This property of ores is a great consumer of power. Plastic ores will break, however, under suddenly applied force.

In the case of elastic deformation, the energy required to distort the ore is not transformed into heat by internal friction, but is stored to be given back again when the pressure is released. Nevertheless, the return of power may be so delayed or be in such a direction as to produce less effect than if the elastic deformation had not occurred.

§ 241. CONDITIONS UNDER WHICH CRUSHING IS EFFECTED. — A particle may be acted on by crushing forces in but three ways: (1) by forces acting at opposite ends of a diameter of the ore particle (diametral crushing), (2) by forces acting along radii (radial crushing), and (3) by forces acting tangentially

(tangential crushing or shearing). (See Figs. 103*a*, *b*, and *c*.) The rock breakers and rolls are typical of radial crushing, the stamp acts by diametral crushing, but after the first break is made the grinding between ore particles on the die causes the action to become confused with shearing. The action of the grinding pan and to a greater or less extent that of the Chili mill is also that of shear-

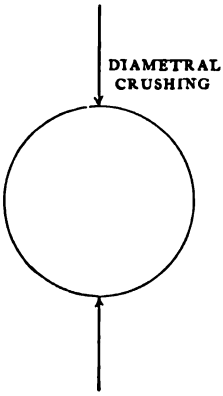

FIG. 103*a*.

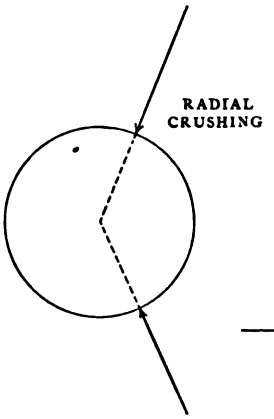

FIG. 103*b*.

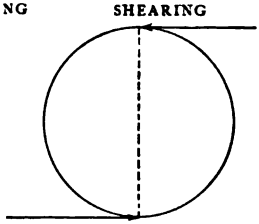

FIG. 103*c*.

ing. The effect produced by these various actions on the ore is extremely characteristic and if the crushed product be sized through a nest of sieves so as to determine the percentages of various sizes in the crushed product and these percentages plotted cumulatively as ordinates with the size of grains as abscissae, characteristic curves are obtained. These curves show identical characteristics no matter what the ore provided the manner of crushing has been

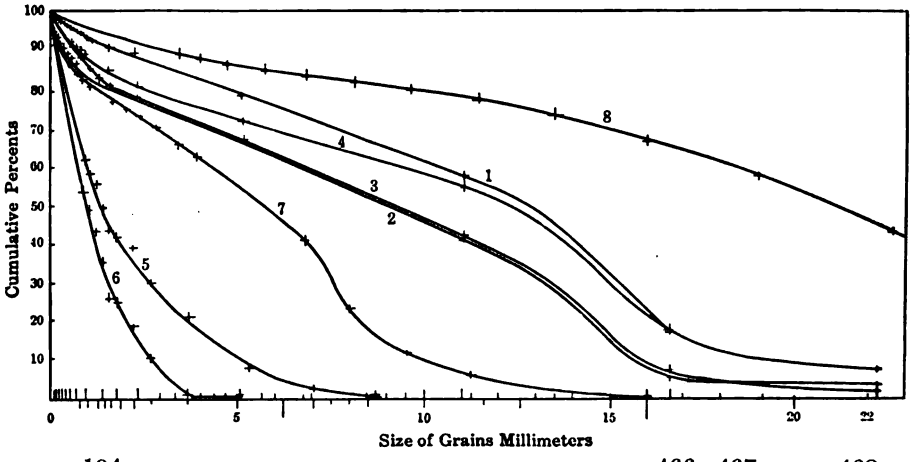

FIG. 104. — GRAPHICAL REPRESENTATION OF TABLES 466, 467, AND 468.

the same. For instance in Fig. 104, curves 1, 2, 3, 4, 7, and 8, are typical of radial crushing. Curve 5 is typical of shearing, this product having been ground in a disc grinder. Curve 6 represents the work done by stamps. It will be noted that curves 5 and 6 show identical characteristics. This is due to the

fact previously mentioned that in the case of stamps, diametral crushing is confused with shearing. In the case of choke-fed rolls we should expect a curve more nearly approaching curves 5 and 6 than those typical of radial crushing. This is of course due to grinding taking place between the ore particles themselves. There seems to be no machine that exactly typifies diametral crushing. The swing-hammer pulverizer perhaps approaches diametral crushing more nearly than any other.

Experiments performed crushing glass balls with rolls, have shown that the balls were ruptured into six principal pieces. (See Fig. 105.)

Five of these pieces were large, with irregular fracture planes, and could be refitted so as to re-establish the spheres, which now contained, however, a hollow space, having the form of an elongated ellipsoid, terminating in small round holes at the points of contact with the roll faces. The sixth piece was an elongated fragment, whose length nearly equaled the entire distance between the points of contact of the opposing roll faces with the original sphere. This elongated fragment had come from the hollow space, which, however, it could not completely refill. The remainder of the material originally filling this space had been converted into small fragments and dust. The volume of this interior ellipsoidal cavity, as determined by water displacement, averaged about 10% of the total volume of the sphere, and the volume of the elongated fragment was about 4.5%. Therefore, about 5.5% of the original sphere had been reduced to a relatively fine state of division as the result of a single passage of the sphere through the rolls, or one crushing effect. Exactly similar results were obtained by the use of jaw breakers.

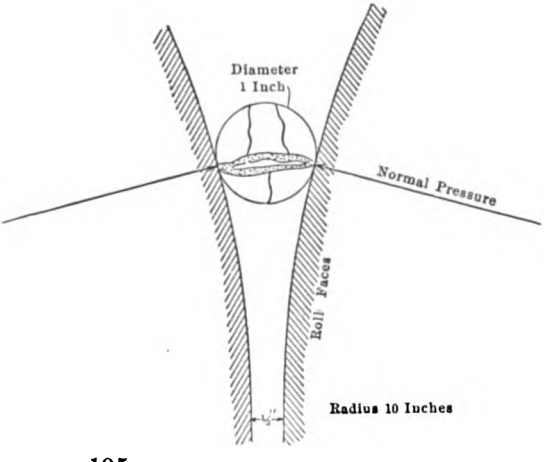

FIG. 105. — CRUSHING EFFECT OF ROLLS.

The results of the experiments in these two instances seem to show that the effect upon a sphere under compression was similar to that of a beam between two compressive forces, and all that portion of the sphere not acting as such a beam was sheared off. The shape of the elongated fragment was approximately that of a figure produced by the lines of distribution of strain within a beam compressed from each end, as was experimentally determined. The larger fragments commonly showed incipient concentric fracture surfaces indicating the transmission of spherical waves of compression, emanating from the points of contact with the rolls.

Very different results were obtained in crushing by stamps. In these experiments ¾-inch steel bars were placed on either side of the 1-inch spheres. The stamps therefore came to rest on the bars and the crushing effect was due solely to impact. The weight of the stamp was 850 pounds and the height of drop to the top of the steel bars was 7½ inches. In all cases the upper portion of the sphere had been irregularly fractured, the lower portion had been reduced to small particles, and in the center in contact with the die, was found a quantity of finely comminuted material. Evidently the comminution had been due

to rupture produced by strains set up by reflected waves of compression meeting oncoming compressive waves.

Further experiments brought out these surprising facts: (1) It was found that materials kiln dried to less than 2% moisture, yielded sizing curves which were practically coincident under similar crushing conditions, irrespective of the mineral composition of the material. (2) When reducing ores in the normal way in rolls, intermediate screening out of material finer than 28-mesh (0.9096 mm.), between successive crushings did not affect the sizing curves of the total resultant product. (3) The quantity of fines produced rapidly increased with the quantity of inhibition in the ore up to 7%.

§ 242. THEORY OF TUBE MILL ACTION. — If one takes a tube containing a small number of flints or balls (Fig. 106*a*), and commences to revolve it very

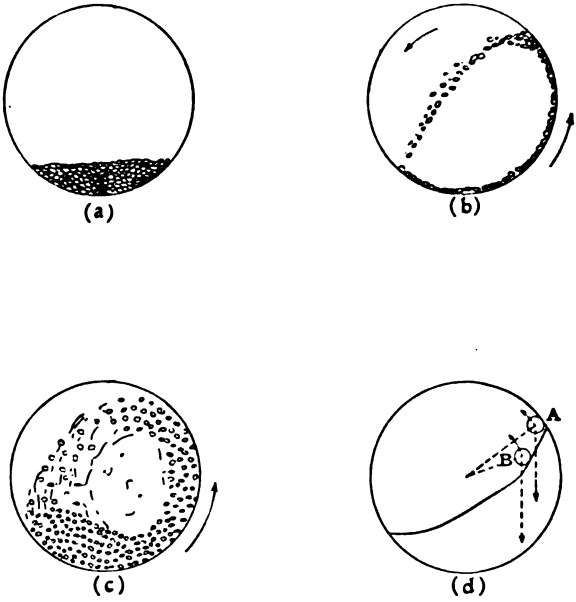

FIG. 106. — DIAGRAMMATIC REPRESENTATION OF TUBE MILL ACTION.

slowly, the balls or flints rise up the side of the tube until the angle of repose is slightly exceeded, whereupon they begin to roll down the slope. If the motion is very slow the balls roll down "*en masse*," but as the speed is increased the balls gradually spread out, rising higher and higher up the side of the tube, to be finally projected forward as shown in Fig. 106*b*. If, now, the number of balls be increased, as is shown in Fig. 106*c*, the action would be similar to that shown in that figure. At the apex of the mass where the change in direction occurs there is friction and a thickening of the mass due to retardation in motion of the balls about to be hurled forward and the crowding of the oncoming balls. If now the number of balls be increased, the rate of revolution remaining the same, we have something like that shown in Fig. 106*d*. If we suppose these pebbles to be of the same weight and that A is 2 feet and B 18 inches from the center of rotation, we shall find from the formula for centrifugal force $\frac{WV^2}{gr}$, that the relative centrifugal force of the two

pebbles is A = 18 and B = 13. Now as both of these pebbles are situated practically on the same angle of slope, B would unquestionably roll down, as its centrifugal force cannot hold it against the force of gravity. A, on the other hand, would be projected forward. Thus we have two methods of crushing going on in the tube mill. First, crushing by shock due to the projection of pebbles, and second, crushing by abrasion due to the rolling of the pebbles.

One form of crushing or the other will predominate according to the type of mill used, the speed of rotation, and other conditions. In dry crushing the pulverizing action seems to be due almost entirely to actual impact of the falling balls, but where the tube is half full of water, it is certain that the force of the blows thus struck must be considerably decreased and the grinding action must take place largely between the separate balls.

§ 243. Comparison of the Various Types of Crushing Machines. — By studying the various types of machines it can be plainly seen that that machine must be selected which best satisfies the characteristics of the ore. True crushing devices are well suited to contend with elastic deformation, but are not always best for plastic rocks. Thus jaw breakers gain somewhat by the elasticity, as against the plasticity, of ores. Rolls and gyratory breakers recover much of this elastic force. With stamps we find that the rebound due to the elasticity of minerals is lost during the period of rest necessary for the cam, but because of the quick application of the force, the plasticity of the ore is overcome. The Huntington and other centrifugal roller mills are also economical in this regard.

Grinders sustain a heavy loss of power as compared to crushers. Thus tube mills, arrastras, and other grinding machines are not well devised to distinguish between the quality of elasticity and plasticity. The tangential motion rubs the surface of the particles and rotates them, abrading the exterior, thus producing dust and wasting power in friction.

§ 244. Relative Efficiency of Re-grinding Machines. — Martin Schwerin gives results of a series of tests on four types of re-grinding machines in the old concentrator of the Anaconda Copper Company, Montana. In published reports of ball mills working a coarse material from a Blake or Gates breaker, and discharging it in a finely comminuted condition, it appears that the machine is well adapted to the work. It is a most efficient screening machine and on this account it is better adapted to a preliminary reduction of ore than for re-grinding particles already reduced to a size approaching that desired in the discharge of the machine. In this latter case it often happens that as much as 50 to 75% of the feed is already smaller than the width of the slot or free aperture of the screen cloth used in the machine. This was the case at Anaconda, where feed was wet jig tailings. The result, in the use of the ball mill, was a rapid screening out of the undersize fed with very little grinding. A finer screen could not be used owing to the necessity for delivering a product suited for jigging. Hence Schwerin concludes that it is absolutely essential that any successful re-grinding machine should be able to work between close size limits.

In Table 63 it is seen that the screening ability of the ball mill and the deterioration in effective crushing increase rapidly with the life of the lining and screens. This is partly due to the enlargements of the hole in the armor plate and partly to the wear of the screens. From a diameter at the small end of the holes in the armor plate of $\frac{9}{16}$ inch, they wore in 5 months to $\frac{7}{8}$ inch. This increased size afforded greater facility for the particles of ore to pass through to the outer screen, thereby escaping the action of the balls. The tailings from the jigs handling ball-mill product for a period of 10 days, during which they were systematically sampled, averaged 0.925% copper. During the same

TABLE 63. — VARIATIONS IN CHILI-MILL PRODUCT CORRESPONDING TO VARIATIONS IN LOAD.

Copper Assay of Unsized Sample.	Tons per Hour.	Size.	Weight. Percent.	Copper Assay. Percent.	Distribution of Copper. Percent.
.....	.....	Over 20 mesh	9 3	.96	5.9
.....	.....	" 40 "	32.0	.91	19.6
1.49	2.2	" 80 "	20.0	1.15	15.3
.....	.....	Through 80 "	38.5	2.30	59.4
.....	.....	Over 20 "	7.5	.87	4.7
.....	.....	" 40 "	30.3	.78	17.2
1.37	2.3	" 80 "	22.8	1.00	16.6
.....	.....	Through 80 "	39.4	2.15	61.5
.....	.....	Over 20 "	7.7	.91	5.4
.....	.....	" 40 "	38.8	.86	25.7
1.30	4.0	" 80 "	20.0	1 04	16.0
.....	.....	Through 80 "	33.3	2.08	52.9
.....	.....	Over 20 "	13.5	.75	7.3
.....	.....	" 40 "	37.1	.85	22.7
1.39	5.0	" 80 "	19.1	1 09	14.9
.....	.....	Through 80 "	30.3	2.54	55.1
.....	.....	Over 20 "	18.7	.83	9.0
.....	.....	" 40 "	31.8	.97	18.0
1.71	6.0	" 80 "	19.7	1.74	20.0
.....	.....	Through 80 "	29.7	3.05	53.0
.....	.....	Over 20 "	18.8	.88	10.5
.....	.....	" 40 "	35.7	1.12	25.3
1.58	6.6	" 80 "	19.6	1.52	18.7
.....	.....	Through 80 "	25.9	2.78	45.5
.....	.....	Over 20 "	28.1	.95	18.0
.....	.....	" 40 "	30.2	1.07	21.8
1.48	7.25	" 80 "	16.6	1 40	16.4
.....	.....	Through 80 "	25.0	2.65	43.3
.....	.....	Over 20 "	26.3	.75	13.3
.....	.....	" 40 "	34.8	1.08	25.3
1.48	8.16	" 80 "	19.0	1.66	21.3
.....	.....	Through 80 "	20.0	2.96	40.1
		Huntington Mill Product (average of 6 samples).			
1.48	.....	Over 20 mesh	12.7	.82	7.0
.....	.....	" 40 "	43.5	.92	27.0
.....	.....	" 80 "	17.8	1.52	18.1
.....	.....	" 160 "	10.9	2.07	15 2
.....	.....	Through 160 "	15.0	3.22	32 6
		Krupp Ball Mill Product (average of 5 samples during 1st month).			
1.98	.....	Over 10 mesh	3.4	1.60	2 7
.....	.....	" 20 "	20.3	1.65	16.9
.....	.....	" 40 "	37.6	1.54	29.2
.....	.....	" 80 "	15.3	1.83	14.1
.....	.....	" 160 "	13.5	2.70	18.4
.....	.....	Through 160 "	11.4	3.21	18.4
		Krupp Ball Mill Product (average of 4 samples 6 months run).			
1.4	.....	Over 10 mesh	23.7	1.41	22.9
.....	.....	" 20 "	31.7	1.35	29.3
.....	.....	" 40 "	29.5	1.28	25.8
.....	.....	" 80 "	5.5	1.52	5.7
.....	.....	" 160 "	4.4	2.16	6 5
.....	.....	Through 160 "	4.4	3.36	10.1
		Gates Roll Product (average of 4 samples).			
.....	.....	Over 10 mesh	14.2	.....	.....
.....	.....	" 20 "	30.2	.....	.....
.....	.....	" 40 "	29.6	.....	.....
.....	.....	" 80 "	12.2	.....	.....
.....	.....	" 160 "	5.8	.....	.....
.....	.....	Through 160 "	7.3	.....	.....

Summary.

	Krupp No. 8 Ball Mill.	Huntington.	Chili.	Gates Rolls.
Capacity in Tons per hour	5 0	3.0	6.0	9 0
Screens used mm.....	1.5	1.5	1.5	1.5
Speed, revolutions per minute	21	65	34	108
Size of machine.....	Drum 4 ft. 6 in. by 6 ft. diameter.	Die Ring 5 ft. diameter.	Die Ring 6 ft. diameter.	Shells 15 in. face by 36 in. diameter.

period the tailings from jigs treating the product from Chili mills averaged 0.505% copper. The feed of both machines averaged about the same in copper values. During the same period the tailings from the first tail-sieve of the ball-mill jigs treating the coarsest of four sizes made by the hydraulic classifier assayed 1.3% copper. The trouble lay in the fact that the included grains were not freed. It is thus evident that the ball mill was not suited for use as a re-grind under these conditions. Another serious objection to the ball mill was the fact of its requiring such careful feed regulation when running anywhere near its capacity. When the feed becomes heavier than the machine can handle and continues so for a while, it packs solidly between the screens and the armor plate and it becomes necessary to shut down, remove the outside screens and revolve the mill until it becomes freed.

The Chili mill, tested by Schwerin, was an original Bradley mill, in which certain improvements had been made at the foundry of the Anaconda Copper Mining Company under the direction of Evans and Waddell. This mill proved to be well adapted for grinding lean tailings and totally unsuited for treating comparatively rich tailings or middlings. The Chili mill has a large capacity and is not sensitive to varying loads. If over or under loaded it does its work without serious loss of efficiency. The size of the screens is the principal factor in the capacity of the Chili mill and may even be said to control it. Being on the outside, they are perfectly accessible, as they are in the stamp mill, and the condition in which they are kept by the attendant is of great importance if the full duty is to be maintained. The output will be reduced almost in proportion to the number of blinded holes.

Attention is called to the results of the experiment designed to show the variations in the product corresponding to variations in the load. The first column, Table 63, is not important, but it is given to show that there were differences in the assays of the feed. From the table it is seen that as the tons per hour increase, the discharge contains greater percentages of coarse sizes and smaller percentages of fine sizes. This is explained when it is remembered that the greater the quantity of material in the machine the greater is the amount that is dashed against the screens at each revolution. Also, since there can be no accumulation of feed beyond a certain point, soon reached, the greater the amount fed into the machine the shorter is the time a given particle can stay in it.

In the last column are shown the relative amounts of copper in the several sizes. The lower tonnages, accompanied by more perfect grinding, are also characterized by less copper in the coarse size. This column shows how the slimes run up in copper as the burden on the machine diminishes, and how the coarse sizes carry more as the burden increases. The more copper in the coarse sizes, as indicated by the last column, the less favorable is the product for concentration, bearing in mind that the copper particles are very fine and require fine grinding for their release from the gangue particles. The results given are believed to substantiate the statement that the Chili mill is best adapted for the grinding of lean tailings.

The Huntington mill tested was one of the under-driven geared, 5-foot size, and was run at 65 revolutions per minute. The product made is seen to be similar to that of the Chili mill when handling about 6.5 tons per hour. From this it must not be inferred that the results would be so nearly alike on material a great deal richer such as middlings might be. On the richer feed the Huntington mill results would not change greatly with respect to distribution of copper, while the slime losses occasioned by grinding with the Chili mill would be excessive. On rich material, therefore, the Huntington mill shows to great advantage. The Huntington mill is adapted for wet crushing within close size limits.

A fault of the Huntington mill is the uneven wearing of the roller rings. Instead of wearing evenly to successively smaller concentric circles, they frequently assume polygonal shapes and then pound around the inside of the die ring instead of rolling in continuous contact with it.

The rolls tested were Gates heavy pattern with shells 15 × 36 inches, run at 108 revolutions per minute, giving a peripheral speed of 1,018 feet per minute. The usual arrangement of rolls and trommels was used, in which the feed first passes to an elevator, then to the trommels, the undersize going to jigs and the oversize to the rolls. After passing the rolls the crushed material joins the incoming feed and goes in the elevator to the trommels again.

The most conspicuous feature of the roll product is the small quantity of slimes present. When the minerals which will make desirable concentrates can be set free by crushing to pass 1.5 mm., or 1.25 mm., there is no machine so well adapted to do the re-grinding as rolls. On such material the recovery of concentrates after roll crushing exceeds the recovery following any other machine.

The capacity of rolls is also large, but they are unfortunately limited in regard to the fineness of the product which they are able to turn out.

In discussing the crushing efficiency of any machine the method of calculation explained in detail in the preceding chapter as applied to the tube mill, might be used with advantage.

PART III.

SEPARATING, CONCENTRATING, OR WASHING.

The purpose of the third part of Ore Dressing is to separate the valuable minerals from the waste, or to separate one valuable mineral from another (thereby enhancing their value), or both, by utilizing the various physical properties of the minerals that are available for these ends.

CHAPTER VIII.

PRELIMINARY WASHING AND HAND SORTING.

Separating is generally divided into preliminary, final, and auxiliary work. The preliminary machines (log washers, screens, and classifiers) are, as a rule, unable to do finished work; they simply divide the ore into a set of preliminary products which are well suited for treatment by the final or finishing machines (picking tables, jigs, shaking tables, vanners, slime tables, magnetic separators, etc.). These latter machines separate the valuable minerals from the waste, but they often yield middling products needing further treatment. These middling products may be made up of either or both of two classes of grains: (1) "included grains," that is, grains in which the particles of valuable mineral are attached to or included in particles of gangue; and (2) "unfinished grains," that is, grains which are composed wholly of valuable mineral or of gangue, but which have escaped separation owing to their shape or relative size.

Preliminary Washers.

§ 245. Preliminary Washers include trough washers, log washers, wash trommels, washing pans, and hydraulic giants. Their province generally is to disintegrate and float adhering clay or fine stuff from the coarser portions. The latter may or may not be turned over to other processes for further concentration. Some forms deliver the coarse and fine products separately; others do only the work of disintegrating, and require a subsequent machine to make the separation. Machines of this class find an extensive use in the washing of iron ores, phosphate rock, and sometimes coal and various other materials.

The disintegrating is done by using a considerable amount of running water, aided by some form of stirring device. These same machines are also sometimes used to enrich partly concentrated products. Several such are described in this chapter because their construction and mode of operation place them here. These washers are of three classes:

(*a*) Those using hand tools for stirring: trough washers.

(*b*) Those using some form of rotating stirrers driven by power: log washers, wash trommels, and washing pans.

(*c*) Those using the force of a water jet: hydraulic giants.

§ 246. The Trough Washer, or "trunking table" as it is sometimes called, in its simplest form, is a wooden trough which may or may not be lined with iron or steel plate. In length it varies from 4 to 12 feet, in width from 1.5 to 5 feet, and in depth from 5 to 18 inches at the head end and from 0 to 18 inches at the tail end. The bottom usually slopes from the head end, which is closed, to the tail end, which is open, the angle of slope varying between 0° and 10°. Sometimes this slope is downward towards the tail end and sometimes the inclination is upwards in the same direction, the latter being the more desirable because it allows larger charges to be worked and prevents the loss of certain small sizes of rich ore which would be carried off in the case of a downward slope. Water is supplied at the head end in liberal quantity often by means of a feed box

running across the end, with a slit clear across it, furnished with a water pipe regulated by a cock. The water in falling from a height of 12 inches or more exerts a considerable washing force. The quantity of water required is such as to make it about 1 inch deep at the tail end with a free discharge. The ore, which may be run of mine ore or the product of some breaker or concentrator, varying in size from 3 or 4 inches to 0, is fed in at the tail end, shoveled over, and worked toward the head end until the fine stuff is removed. It is then shoveled to a gravel screen. Sometimes by skillful turning over of the mass, not only is the fine stuff washed away, but the waste rock is separated from the mineral. A trough washer of the average dimensions as above described, will handle about 8 tons of run of mine ore in 10 hours and requires the attention of one man. The washer may yield: (1) coarse sand, left in the washer; (2) fine sand in a small tailings tank; (3) clayey waste.

Other forms, ingeniously combining riffles and sieves, are described by different authors, but they rob the apparatus of its simplicity, which is its main advantage. A dam at the tail end made of bars, one on another, held between side cleats, and heightened as needed, is sometimes used. Occasionally the washer is mounted on two transverse rockers and a rocking motion is imparted by a side arm and a vertical connecting rod leading to an eccentric; the sides rising and falling about 1.5 inches at each stroke.

A trough washer may have the hand work replaced by mechanical stirring. In one instance a trough 10 feet 3 inches long, 2 feet 10½ inches wide, sloping 10°, having a semi-cylindrical bottom of 18½-inches radius, carries a longitudinal shaft with stirring arms, the ends of which swing within 1 inch of the curved surface of the trough. This shaft is placed at the geometrical center of the trough. When it is oscillated (by hand or power), the arms stir the ore and the lighter grains are carried rapidly down the slope by the water, while the heavier grains move but slowly. Scaife has improved this machine by putting in riffles to hold back the heavy minerals, and by adopting a hinged bottom, which is dropped by a lever at the proper time, and the accumulated product thus removed without wasting time and water to wash it down the slope. A washer of this improved type will handle from 75 to 100 tons of coal per day, and one man can attend to six washers. Each washer requires less than 1 horse-power to operate it. The larger the material fed the greater must be the slope and the quantity of water used.

Trough washers are used in large works in a subordinate way, for working up small quantities of a rich product where more expensive apparatus is not warranted. They are also used in small works as part of the main process.

§ 247. Log Washers. — A log washer, or "trunking machine," as it is sometimes called, is an iron or wooden trough (the latter may or may not be lined with iron or steel plate), with an inclination towards the discharging end varying from 2.75° to 6°, in which revolves a thick wooden, cast-iron, wrought-iron or steel shaft or log, — so called because the original apparatus was a log with blades — carrying blades set obliquely to the axis so as to form a screw conveyor. Log washers vary in length from 12 to 31 feet, in width from 16 to 36 inches for single machines and from 6 to 88 inches for double washers, while they range from 8 to 50 inches in depth. The blades slowly convey the lumps of ore up hill against the current, discharging them at the upper end, while the clay is gradually disintegrated and floated down to overflow at the lower end. The disintegrating action of the blades is due partly to lifting and dropping the ore and partly to a knifing or cutting of the lumps with the front edges of the blades. The bottom of the trough may be constructed semi-cylindrical, with sides raised a little above the level of the axis to prevent slopping, or it may be a natural bottom formed by lumps of ore. At the lower end

there is a dam to partially hold back the water. The upper end is open for the free discharge of the lump ore. The ore is fed near the lower end on the *rising* side of the log. This confines the work of the log to disintegrating and conveying; while, if fed on the *descending* side, it would become a breaker and would probably break the blades, except where the ore bottom is used. The blades are put upon the logs in several ways: in spiral rows, having the blades either with the same or with less pitch than the row; or in rows parallel to the axis, with the blades oblique. The pitch of the rows varies from 0 to 60 inches. One end of the log (which may be circular, octagonal, or hexagonal in section), works in a gudgeon placed below the water in the box containing the ore to be washed; the other end works in journals. Logs are sometimes driven at the lower ends, but this requires special stuffing boxes, and the usual practice is to drive from the upper end. They are usually run in pairs making from 12 to 18 revolutions per minute and, together, having capacities between 100 and 350 tons of product or 2,200 and 4,400 tons of feed per 24 hours, requiring from 50 to 500 gallons of water per minute, according to the nature of the material treated. The total expense for labor and fuel, including water supply, varies from 5 to 25 cents per ton of product, averaging possibly 10 cents.

§ 248. LONGDALE LOG WASHER. — A limonite washer at Longdale, Virginia, contains two pairs of log washers, or four logs in all. (See Fig. 107*a*.) The description of one log is here given. The trough, which is made of 3-inch pine plank, is 3 feet wide, 1 foot 5 inches deep, and 18 feet 5 inches long, inside measures. Into it are put 15-inch lengths of cast-iron semi-cylinders, 1 inch thick, with side flanges by which lag screws hold them to the sides of the trough. When these sections are laid close together, end to end, they make practically a continuous semi-cylindrical cast-iron trough, 18 feet 5 inches long, 1 foot 5 inches deep, and 2 feet 6 inches wide, inside measures. The slope of the trough is $\frac{3}{4}$ inch in 1 foot, or 3° 35′. The log, of which Fig. 108*a* is a cross-section, is a cast-iron pipe 17 feet 5½ inches long, 11½ inches outside diameter, and having ¾-inch walls. This makes a splendid log — one that is stiff and wears well. It is flanged at each end to a cast-iron gudgeon (Fig. 108*b*). The prolongation of the lower gudgeon forms a journal 5½ inches in diameter, that of the upper 4½ inches in diameter. The blades or spoons (Fig. 108*c*) of chilled iron, are put on in two threads, 180° apart, with a pitch of 5 feet, which makes the pitch angle 56° 15′ at the outer ends of the blades; while, on the other hand, the plane of each blade has a pitch angle of 26°. There are eight blades to the circle, each 8½ inches long, 4 inches wide, sweeping a circle 28½ inches in diameter. They are flanged at their bases, with under surfaces concave cylindrical, to fit the pipe. Each pair of two opposite blades is fastened by two ¾-inch bolts passing through their

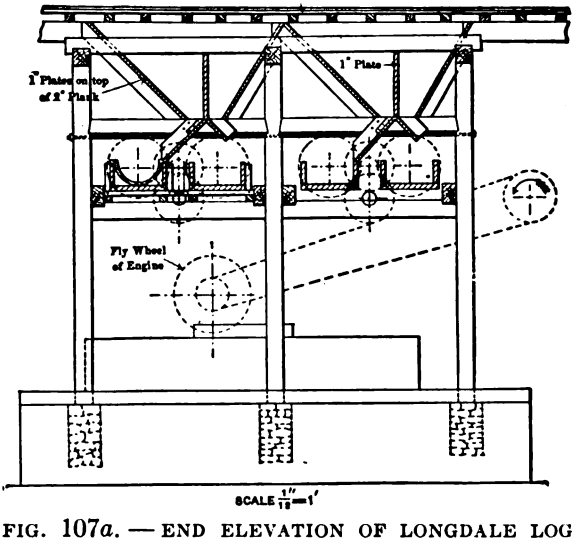

FIG. 107*a*. — END ELEVATION OF LONGDALE LOG WASHER.

flanges and through the log. The radius or curvature of the trough being 15 inches and that of the blades 14¼ inches; the space between the trough and the

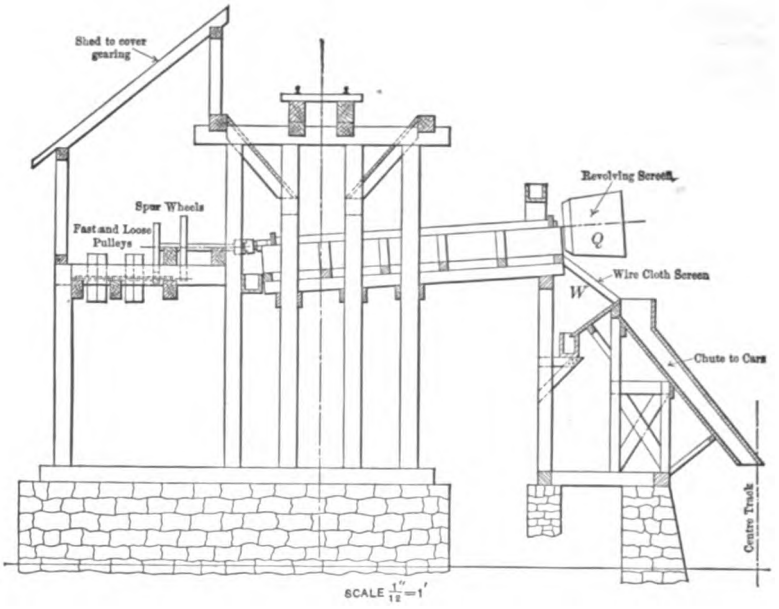

FIG. 107*b*. — SIDE ELEVATION OF LONGDALE LOG WASHER.

ends of the blades is ¾ inch. The upper gudgeon is prolonged to form a shaft, which carries a conical sizing trommel (*Q*, Fig. 107*b*), for treating the enriched product. At the lower end, the gudgeon of the log is joined to the horizontal driving shaft by a flexible clutch coupling by means of which the log may be thrown in or out of gear. The log makes 12 revolutions a minute.

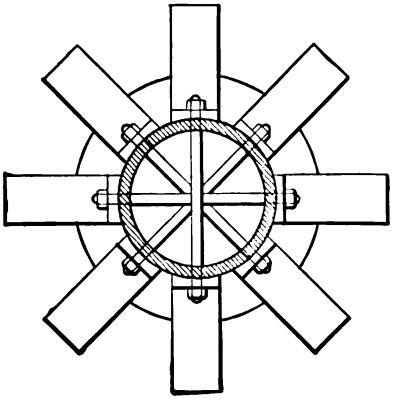

FIG. 108*a*. — CROSS-SECTION OF LONGDALE LOG WITH BLADES ATTACHED.

The feed will all pass through an 8-inch ring. It comes from a large hopper by a chute, and is fed on the rising side of the blades at about 2 feet from the lower end. Water is fed at the upper end at the rate of 150 gallons per minute. The capacity of a single log is 200 tons of mine ore in 24 hours, yielding 70.8% of washed ore, which is practically a sized product, the oversize of a 14-mesh screen (*W*, Fig. 107*b*), placed at the head end. An experiment with a 20-mesh screen, in place of the 14-mesh, increased the yield of washed ore 4%, the percentage of silica and iron remaining practically the same.

The weights of the component parts of a log are as follows: The shaft, allowing 35 pounds for the flanges, weighs about 750 pounds; the two gudgeons, at 125 pounds each, 250 pounds; the 54 blades at 27 pounds each, 1,458 pounds; the 54 bolts and nuts at 2 pounds each, 108

pounds; total 2,566 pounds. The cost of a complete log would probably be 1¼ cents per pound.

The blades wear perhaps 3 months, more or less, according to the depth of chill on the wearing face. The gudgeons last about 1 year. The logs may last 5 years or more. The power required is 6¼ horse-power for a single log and its trommel.

The following figures are given for 1 day's work of the four logs, it being the average of 6 days: Pounds of coal burned per day, 1,479.16; tons of ore washed, 196.2; tons of washed ore, 138.9; percentage of washed ore to ore washed, 70.8; number of hours run, 5.375; number of men, including engineer, 6; cost per ton of mine ore for labor, $0.032; cost per ton of washed ore for labor, $0.045; pounds coal burned per ton of mine ore, 10.6.

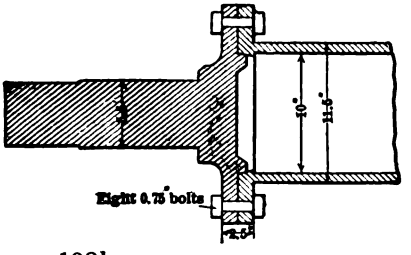

FIG. 108*b*. — ATTACHMENT OF LOG TO GUDGEON (LONGDALE).

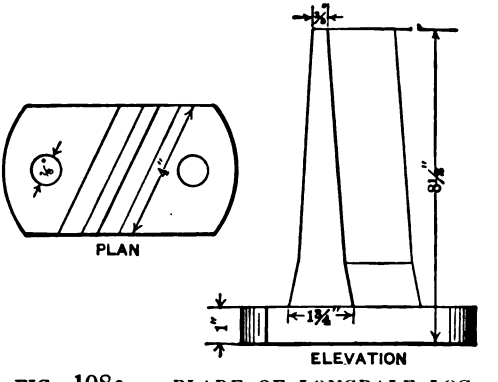

FIG. 108*c*. — BLADE OF LONGDALE LOG WASHER.

§ 249. THE THOMAS LOG WASHER was the first to have two logs in one trough. Its trough is usually about 25 feet long, 5 feet wide, and 2 feet deep, inside measures. The bottom and sides are of heavy oak, the ends of cast iron. In it are two parallel logs geared together. Power is delivered to one of the logs, by reducing gears from the line shaft. The ore is fed near the lower end between the two logs, upon the rising blades of both logs. The bottom soon fills with ore, making a working bottom that saves the wear on the planks. When this working bottom is established, the systematic washing and conveying of the lumps up the slope goes on. Wash water is fed in a spray between the logs, near the upper end. The water overflows at the lower end by a mud trough which discharges at one side just above the bulk head. The lump ore is discharged at the upper end into a trommel, to give it a final washing. The pitch angle of the blades is about 30°. The logs are hexagonal in section, and there are three rows of blades on each log, placed along the three alternate faces of the hexagonal prism. The diameter of the outside blade circle is about 27¾ inches, the blades are about 7⅛ inches high. It treats 50 to 75 tons per day and uses 30 to 50 gallons of water per minute, consuming 12 to 15 horse-power.

§ 250. THE TURBO LOG WASHER. — The Turbo (see Fig. 109) is a long, double log washer with provision for keeping the fine material thoroughly agitated and promoting washing. The box is 18 feet long and is set at a slope of 1 inch to the foot. The two logs are made of steel sections with the arms bolted on, and revolve in opposite directions. The bottom of the box is of metal and perforated by a number of $\frac{1}{8}$-inch holes. Underneath this bottom is a compartment into which water is fed from a main pipe through a series of separate pipes, as shown. Water is thus forced up through the bottom of the

washer and the fine material is thus kept agitated by a multitude of sorting columns. Each separate pipe leading into the chamber has its separate valve for regulating the water supply throughout the length of the washer. The concentrates from the Turbo are discharged at the low end of the machine. These machines are treating iron ore, undersize of 16-inch screen, and delivering concentrates carrying 60% iron. Three horse-power and 150 gallons of water per minute are required by the Turbo when handling 1,000 tons of ore per shift.

§ 251. HORIZONTAL LOGS. — Log washers have been built with two or three horizontal, immersed, parallel logs in one tank, with partial partitions between them. The first log pushes the ore forward by the end of the dividing partition, and delivers it to the second log. This carries it back and delivers it in like manner to the third log, which carries it forward to the point where it is discharged by the revolving scraper. The water moves in the opposite direction to the ore. This form has not met with the favor given to those previously described.

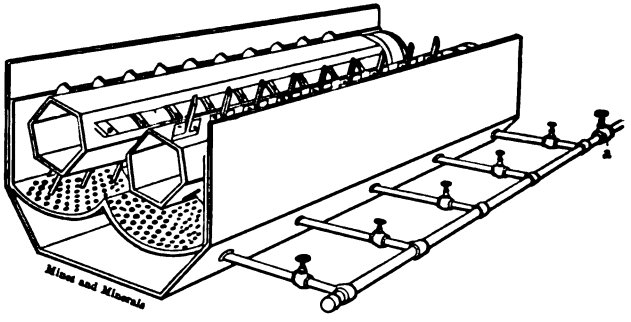

FIG. 109. — THE TURBO LOG WASHER.

§ 252. GENERAL CONDITIONS. — The iron log is stronger than the wooden log. It is also driven faster, has more teeth, and a greater capacity. It has a longer life and the cost of repairs is less as well as a saving of time in making the repairs. In the United States the use of log washers is on the increase, but the wash trommel, a device that finds much use abroad, has not been introduced to any great extent. Wash trommels in the United States find their use confined chiefly to the Cripple Creek district of Colorado.

§ 253. WASH TROMMELS are hollow, revolving cylinders or cones (set with their axes horizontal), which disintegrate and float the clayey matter while ore and water are passing through them. This is accomplished by impact between the lumps of ore, sometimes assisted by the lifting and cutting action of blades, spikes or longitudinal slats. In the cylindrical form the ore is conveyed forward by oblique blades, acting on the principle of a propeller, or by continuous screw threads; but in the conical form the ore moves forward by gravity. There are two chief classes of wash trommels:

(*a*) Those with a partially closed discharging end, in which the lumps are immersed in a pool of water for washing; and

(*b*) Those with the discharging end completely open, in which the ore is washed by either a stream or sprays of water, or by both. In class (*a*) the ore is discharged either by a contracting cone with screw threads or by a little sand-wheel elevator; in class (*b*) it discharges by gravity.

Continuous screw threads are troublesome both to construct and maintain, and, beside, they do too much conveying and too little disintegrating. Oblique knives or blades appear to be generally preferred to continuous threads.

Friction wheels are more commonly used for the support of these trommels than spiders upon central shafts. The latter, however, are not frequently used for trommels of class (*b*).

Rittinger says that the most satisfactory peripheral speed is 2½ feet per second. If the speed is too slow, it not only wastes time, but the operation is less effective; and if too fast, the time of exposure is too short for the proper softening of the clay.

In this country log washers appear to have pretty much driven out the wash trommels, and on this account there is a dearth of data upon the latter The author, therefore, places before his readers machines described as standard by foreign authors.

§ 254. *Wash Trommels with Ore Immersed in Water.* — The wash trommel, shown in Figs. 110*a* and 110*b*, is an expanding cone with partially closed ends,

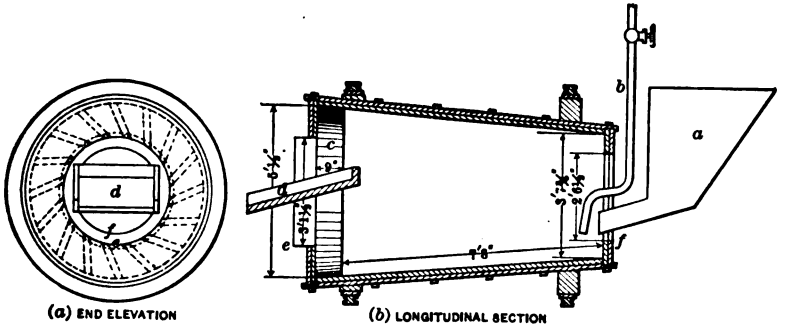

FIG. 110. — WASH TROMMEL (AFTER RITTINGER).

running on friction rollers. The ore is fed from the hopper *a* and wash water is run in from the pipe *b*. The disintegration is accomplished wholly by impact among the lumps of ore as they tumble down the slope. The ore and water are raised by the sand-wheel buckets at *c*, and discharged upon the launder *d*. If there is too much water for the sand wheel to remove, the excess overflows at *e* into a trough placed to receive it. There can be no overflow at *f*, because *f* is higher than *e*.

The walls of the trommel consist of two layers of wooden or iron staves, each 1½ to 2 inches thick. It is bound with six iron hoops. There are 16 of the elevator buckets each 8 inches wide and 14 inches long, made of plate iron with bent edges 2 inches wide. They are laid out so as to be tangent to a circle 24 inches in diameter. The trommel makes about 12 revolutions per minute. The trommel may have a screw thread or inclined blades for disintegrating and carrying forward the ore.

The capacity is 200 to 300 cubic feet of mine fines per hour, or, if very clayey, 100 cubic feet; 1,000 to 2,000 gallons of water are required per hour, and the power used is ½ to ¾ horse-power. This style of trommel sometimes has longitudinal ribs for lifting the ore.

§ 255. The Crickboom wash trommel (Fig. 111), is a steel plate cylinder 98.4 inches long and 49.2 inches in diameter. At the feed end is a truncated cone 12.1 inches long on the axis and 29 inches in diameter at the small end. At the discharge end is a truncated cone 12.1 inches long and 39.1 inches in diameter. Within the cylinder are fourteen longitudinal, lifting slats of flat iron, each of which is attached by seven short angle irons to the shell, leaving a clear space under the slats of ¾ inch. Upon each of these slats are attached nine blades, the tops and bottoms of which are even with the top and bottom

of the slat, and the blades are set at an angle of about 70° with the axis of the machine. The cylinder is supported on four friction rollers. Passing through the center is a shaft, supported in independent bearings and carrying sixty-two arms placed in four longitudinal rows. The radius of the revolving arms is 15.6 inches; the radius of the inner ends of the blades on the cylinder is 18.8 inches; leaving a clear space of 3.2 inches. The cylinder makes 10 revolutions a minute in one direction; the arms make 220 revolutions per minute in the opposite direction. The ore, which is fed with water from a hopper at the feed end, is raised by the longitudinal slats to a point somewhat above the center, and at the same time moved forward by the diagonal blades. As it *falls*, it is

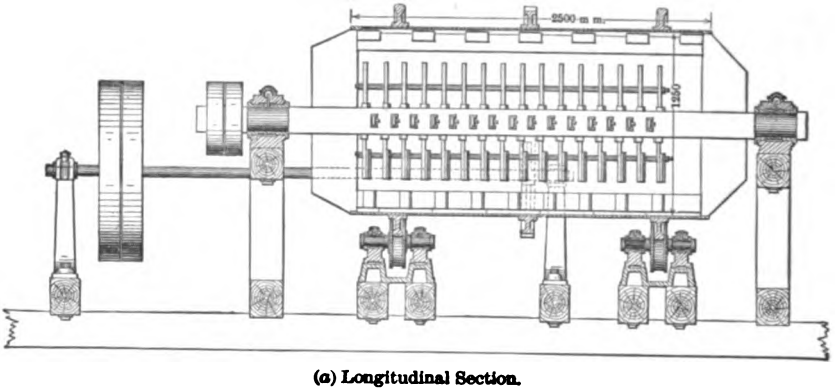

(a) Longitudinal Section.

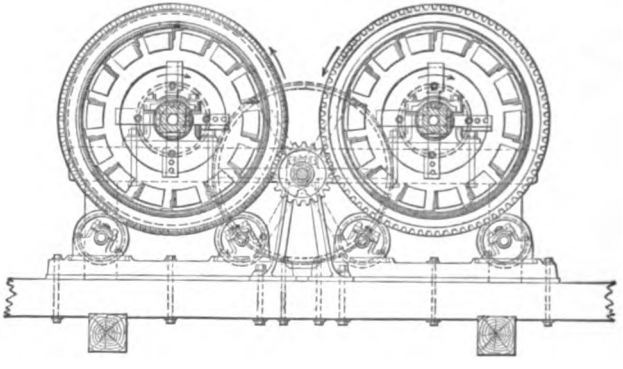

(b) Cross Section.

FIG. 111. — CRICKBOOM WASH TROMMEL.

struck by the rapidly *descending* arms, and disintegrated. The ¾-inch spaces under the slats save the water and fine ore from being lifted. The mixed water, sand, and lumps of ore are discharged by overflowing at the lower end of the machine. At the Altenberg mine in Aachen, one of these trommels treats 5 to 5.5 tons of tough clayey ore per hour, using 2,110 gallons of water. The trommel lasts 9 to 10 years, except that the conical receiving and discharging ends wear somewhat faster.

§ 256. *Wash Trommels Washing the Ore in a Running Stream of Water.* — Fig. 112 shows a simple form of wash trommel consisting of a plate iron cone 77.2 inches long, with a small diameter of 43.3 inches and a large diameter of 51.2 inches. The whole is carried on a six-armed spider at each end, the spiders

being keyed to a wrought-iron shaft 3.9 inches in diameter. At the feed end is a cone 32.3 inches in small diameter and 12.2 inches long on the axis. The first 29.5 inches beyond the feed cone carries three rings of spikes, 4.5 inches long, projecting toward the center. There are 22 spikes in each ring. The remaining 47.7 inches of the length is perforated with 30-mm. holes. The ore is fed from the hopper *a* into the receiving cone *b* by means of a stream of water. Water is also used on the outside of the screen, in the form of a spray. The trommel makes 15 revolutions a minute, treats 99 tons of ore in 24 hours, and if the latter does not contain too much clay, uses 26.4 gallons of water a minute, consuming about 0.5 horse-power. It yields: oversize, which is cleaned lump ore; undersize, which is fine ore, clay, and water.

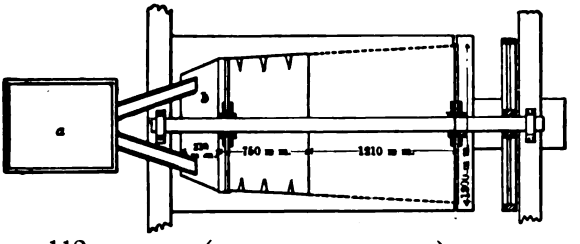

FIG. 112. — PLAN (PARTLY IN SECTION) OF A COMBINED WASH TROMMEL AND SIZING TROMMEL (AFTER LINKENBACH).

In comparing log washers with wash trommels, Benedict states that the latter do more work than the former, but the ore is not so well cleaned by them, and the running expense is probably higher.

§ 257. WASHING PANS. — Large circular pans are sometimes used, in which the ore is disintegrated by revolving blades, or by rollers and scrapers. The ore being fed with water at one side, the clay and fine sand overflow at the center while the heavy product collects in the bottom of the pan.

In the South African diamond fields, in order to free the weathered diamond-bearing "blue ground" from the finest sand and mud, an iron pan 14 feet in diameter and 12 inches deep, is used. In the middle of the pan is a circular dam 4 feet in diameter and 8 inches high. A vertical central shaft, revolving 8 or 9 times a minute, carries 10 horizontal arms, each provided with 6 or 7 vertical blades, which are arranged in a spiral between the dam and the edge of the pan. The "blue," after passing through the ($\frac{3}{4}$ inch) holes of a trommel, is fed with water at the outer edge of the machine. It is disintegrated by the revolving blades, and the water carries the clay over the inner rim into a trough, while the heavy gravel is worked toward the outer rim. To avoid possible loss of diamonds in the overflowing clay, the overflow from two pans passes through one safety pan of the same construction, except that the bottom, instead of being flat, slopes gently toward the outer rim. One pan treats 400 to 450 loads in 10 hours, leaving a deposit of 3 or 4 loads,[1] which is removed through a gate in the bottom, by means of scrapers attached to the revolving arms. These pans resemble the basin washers that are used in Europe to disintegrate clay.

A pan, in some respects similar to those just described, is used for washing corundum and emery. It consists of a shallow wooden tub 5 feet in diameter, with a cast-iron bed, on which two heavy wooden rollers revolve about 12 times a minute. The material is stirred by an iron fork that precedes each roller. Constantly flowing water, carefully regulated, carries the lighter portion through

[1] A load of "blue ground" weighs about 1,600 pounds.

outlets in a raised, central platform, the heavy corundum remaining in the pan. The operation is continued 3 to 5 hours. One man can tend 8 pans, each of which requires 3 to 5 horse-power. Much care must be exercised not to round the grains of corundum which will take place rapidly after a certain point in the process is reached, and will greatly impair their cutting edges.

§ 258. HYDRAULIC GIANTS are especially designed nozzles which serve to control and direct the powerful jets of water that are sometimes used to disintegrate large bodies of ore. Fig. 113 represents the Monitor, which is one of the forms that has found favor in auriferous gravel mining. The movements to right and left, or up and down, are upon vertical and horizontal pivots respectively. The guiding parts consist of: *A*, the iron nozzle, *B*, the deflector, attached by a gimbal joint; and *C*, a lever to govern the movement of *B*. When *C* is moved in any direction, the force of the water jet acting upon *B* moves the whole nozzle to the same side that *C* was moved. The size of nozzles ranges from 4 to 9 inches in diameter, 5½ to 7 inches being the most common sizes. To provide the necessary force for the jets, water columns of 55 to 1,720 feet have been used at California placer mines, the usual heights ranging from 200 to 400 feet. For details the reader is referred to Bowie's "Hydraulic Mining."

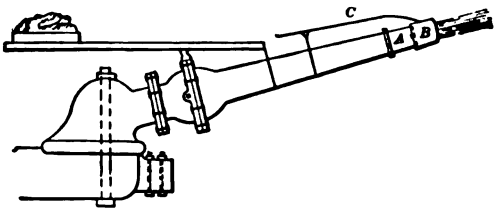

FIG. 113. — MONITOR HYDRAULIC GIANT.

§ 259. JET WASHER. — A jet washer or disintegrator is composed of a horizontal cylinder about 6 feet long by 2 feet in diameter, closed at one end, having a feed hopper placed on top at a point about 2 feet from the closed end. A charge of ore is fed in through the hopper and a jet 1.5 inches in diameter, delivered from a steam pump under 50 pounds pressure per square inch, plays in at the open end and gives a final disintegration to the clay. This device is said to be a far more efficient disintegrator than a log washer.

HAND PICKING OR SORTING.

§ 260. The process of separating into classes, by hand, ores that have already been broken is known as hand picking. It is of service in many ways. It saves rich ore from being crushed and made into slimes. It saves the expense of dressing (and in some cases also of shipping) waste rock, and at the same time increases the virtual capacity of the mill. In this connection it is especially applicable to ores that occur in such narrow veins that considerable country rock has to be mined with them. The picking out of wood, rope ends, etc., is sometimes adopted to rid the following screens, spigot discharges, etc., of those troublesome stoppages that cause so much derangement of mill work. Picking is often advantageous as relieving the concentrating machines of some of their most difficult work, for example, blende may be picked from chalcopyrite, barite from blende, etc. In either of these cases the two minerals are so nearly equal in specific gravity that they cannot be separated by the concentrating machines. In like manner, two grades of concentrating ore may be made, one of which is easy and the other difficult to concentrate, or one of which has one mineral prominent, and the other another. In a great many of the ore-dressing problems of to-day, hand picking as a necessary step takes, or should take, an important place. The tendency to slight hand picking and to regard it as an antiquated method has been remarked upon by many to whom its value as a process has been made apparent.

§ 261. BREAKING. — Breaking previous to hand picking may be accom-

plished in two ways: first by mechanical breakers, and second by hammers. In breaking by means of hammers less fines are made than when mechanical breakers are used.

§ 262. SLEDGING AND SPALLING. — When the lumps of mine ore are broken by hammers weighing say 10 pounds or more, the operation is called *sledging*, whether the product is hand picked or not. When ore that has already been selected is broken down to 2 or 2½ inch cubes by two-hand long handled hammers weighing from 2 to 6 pounds, the operation is called *spalling*, whether or not the product is hand picked.

§ 263. COBBING consists in hand picking accompanied by breaking with a one-hand hammer weighing 1.5 to 7 pounds. As a rule, the ore should be already broken as small as 4 inches in diameter. The richer the valuable mineral, and the more easily and cleanly it cleaves from the waste, the stronger will be the argument for cobbing, since it produces cleaner products than machine work, and causes less loss by sliming. It will naturally produce cleaner products than spalling. Linkenbach says that a strong boy can cob 165 pounds of ordinary sulphide ore per hour, making 6% of fines. At a mine in Saxony, cobbing set aside 25% of the material from further treatment. Cobbing is not used extensively in this country but the author is of the opinion that it might be used with profit in many cases. Hammers with 6-inch heads, forged out of 1½-inch octagonal steel bars and provided with long springy handles of oak, hickory, or horn-beam, have been found best for this work. These hammers weigh approximately 2.75 pounds without handles.

§ 264. HAND PICKING ACCOMPANIED BY SLEDGING. — In regions where labor is not too expensive, hand picking with sledging may be resorted to with great advantage, saving the expense of crushing and washing the richer ore, and avoiding the loss in slimes; and in regions where ore is rich and concentration by machines is unavailable, hand picking with sledging must be used. On the other hand, in localities where the price of labor is high, and mill work is available, the tendency is to abolish the sledge almost entirely, and to use large breakers, but the advantage of hand picking may still be retained, while the ore is being fed to the bin, the rock breaker, the rolls or the stamps. This form of hand picking costs so little per ton of picked ore produced, and the yield can be so easily compared with the cost of getting it, that it should commend itself to mill men.

§ 265. GENERAL CONSIDERATIONS. — Some systematic method must be provided of bringing the materials to and removing them from the pickers, so as to avoid wasting their time and energy.

The work of picking should be inspected to see that it is properly done.

The keener sight of boys makes them better pickers than men, but the latter are required for inspection and responsibility and for the heavy sledging and spalling. The spalling floor and the hand-picking house should both be well lighted. If hand picking must be done at night, electric lights are to be preferred. The natural colors of the minerals show better by the light of the arc lamp than by other artificial lights. Picking by night, however, is undesirable, and should not be resorted to if it can be avoided.

In most cases picking will be best done upon rock freshly rinsed with water. This brings out the colors of the minerals to the best advantage, and it also lays the dust. Cases often occur, however, where washing preparatory to picking is impracticable.

The fines are usually screened out before hand picking, and sometimes the coarser part is divided into two classes. The more nearly uniform the size of the ore particles, the easier is the work.

Hand picking may be considered in the order of the places where it is done, namely, in the mine, at the rock house, or in the mill.

§ 266. PICKING IN THE MINE. — Under this heading may be included several different ideas, as follows:

Waste for Stowing. — The separation of easily distinguishable barren rock from ore, to save the cost of hoisting and to make filling for the mine, may be adopted, but it does not appear to be much favored in this country, probably on account of the losses of ore which occur, owing to poor light, limited space, and the difficulty of inspection. At Mine la Motte, Missouri, however, from 25 to 50% of the limestone gangue broken is left in the mine much impoverished in galena, while in the Lake Superior copper district, one of the most successful properties has its operations based on this principle.

Rich Ore for Economy. — Pure, soft ores that are easily recognizable, for example, galena, may be selected in the mine, to minimize the losses due to attrition. This hand picking may yield from 2 to 25% of smelting ore.

At Friedrichssegen, Rhenish Prussia, sloping gratings with 50-mm. square holes are placed in the ore chutes at all of the workings in the mine. As the ore passes over the gratings, clean galena, blende, siderite, and copper ore are picked out. The system is made a success by the payment of small bonuses. It is not uncommon, in Europe, for the miner to receive a slight premium for selected ore, but this premium is not so large that he is tempted to devote any of his time to spalling or true dressing to the neglect of mining.

Block System. — The valuable and refuse minerals may be so distributed in a mine that a species of block system may be adopted, handling ores by blocks or masses, one whole stope being sent to the smelter, another to the mill.

For purposes of management, the ore from various shaft-sinking, level-driving, or stoping operations, may be hoisted and stored separately, en route to the mill process. By this method, their separate valuation by mill run approves or condemns each section of workings in the ordinary routine of business.

§ 267. HAND PICKING IN THE ROCK HOUSE. — The rock house is either an addition to the shaft house, or a separate building near by. It generally has a track for bringing the ore to the pickers; a grizzly and bin for screening out and receiving the fines; a picking floor or table for sorting the oversize of the grizzly; and tracks for removing the waste, the lump ore, and the fines. The material subjected to picking is the oversize of the grizzly; and this work is done either on large spalling floors with the aid of sledges, drop hammers, etc., on picking tables; on the grizzlies; or on both grizzlies and floor.

In the rock houses of the Lake Superior copper district, the quantity of native copper picked out ranges from 8% to 30% of the total copper product. The amount of waste rejected by hand picking in this district varies from 7% to 12% of the rock hoisted.

At most of the gold mines on the Rand, in South Africa, where the "reef" is often so narrow as to require the mining of a good deal of waste rock, considerable attention is given to removing barren quartzite from the ore as it passes through the rock houses. At some of the mines the ore is screened into three sizes, the fines going direct to the mill, while the two coarser sizes are hand picked. The good ore remaining in the coarsest size is then broken and sent to a grizzly, the oversize of which is again hand picked. In some cases as much as 30% or even 40 or 50% of the rock hoisted is removed by hand picking, though it is estimated that the average for the district is probably from 12 to 16%.

§ 268. A section of a Cripple Creek rock house is shown in Fig. 114. The receiving car *a* has been turned 90° from the direction of the track on which it comes in, *b* is the grizzly, *c* the bin for fines, *d* the picking table, *e* the car for

removing lump ore or waste, and *f* the bins for the various grades of lump ore. A car may be run along in front of bins *f* for removing the various products.

§ 269. HAND PICKING IN THE MILLS is done on chutes, grizzlies, tables or floors and yields various combinations of the following products: smelting ore, concentrating ore, and waste. Often the waste consists simply of wood chips, etc., which would be troublesome in the mill. In some mills two grades of concentrating ore or smelting ore are produced. In Europe, where more attention is given to hand picking than in this country, as many as fifteen different products are made.

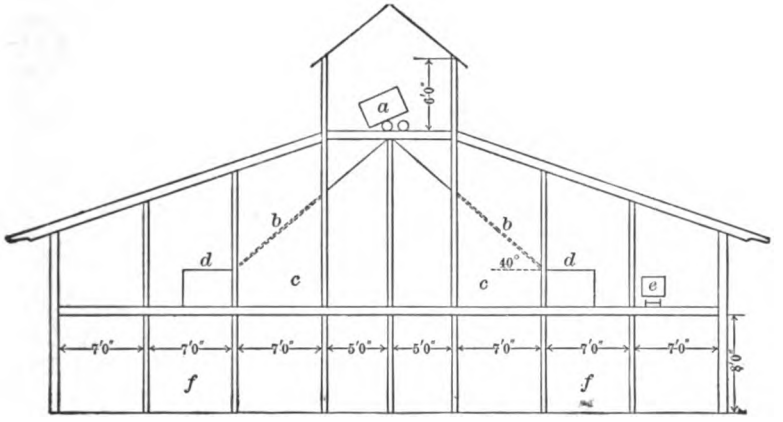

FIG. 114. — SIDE ELEVATION OF A CRIPPLE CREEK ROCK HOUSE.

Size of Ore. — In American mills the oversize of the coarse grizzlies often contains lumps 9 inches in diameter or even larger. There is very little hand picking of sizes larger than 4 inches or smaller than 0.5 inch, although the writer recalls hand picking performed on material as small as 16 mesh and as large as 6 inches in diameter. It is practically impossible to assign a limit above which hand picking may be profitable, and below which it will not be so. Each manager must decide this for his own mill. In some mills the picking of all sizes mixed is resorted to with profit. However, while this is proper in some cases, it is not in general to be recommended, since the eye and mind cannot easily follow large and small pieces at the same time, and the result is therefore less complete. The picker who uses specific gravity to aid him in his work is also at a disadvantage under these conditions. Table 64 gives an idea of the sizes that are hand picked in European mills.

TABLE 64. — SIZES OF ORE HAND PICKED IN EUROPEAN MILLS.

Place.	Sizes Picked. Inches.
Allevard, Isere, France	1.2.*
Clausthal, Harz Mountains	1.25 to 2.4; 0.7 to 1.25; 0.5 to 0.7.
Friedrichssegen, Rhenish Prussia	1.4*; 1.4 to 2; 1.2 to 1.4; 1 to 1.4; 0.8 to 1.2; 0.5 to 0.8.
Laurenburg-on-the-Lahn	2.5*; 1.4 to 2.5; 0.6 to 1.4.
Lauthenthal, Harz Mountains	3.2*; 1.25 to 3.2; 0.5 to 1.25.
Maiern, Austria	1.2 to 2; 1 to 1.2; 0.6 to 1.8.
Przibram, Bohemia	2.4 to 3.2; 1.25 to 2.4; 0.85 to 1.25; 0.6 to 0.85.
Ramsbeck, Westphalia (Dörnberg and Aurora Works)	1.2*; 0.8 to 2.4; 0.5 to 0.8.
Schulenberg, Harz Mountains	2.4*; 0.8 to 2.4.
Weiss, Rhenish Prussia	2*; 1.2 to 2; 0.8 to 1.2; 0.6 to 0.8.

* Run of mine with sizes finer than this screened out.

§ 270. THE COST OF HAND PICKING depends on the percentage that is picked

out, the size of the ore, the ease with which the different minerals can be distinguished, the mechanical facilities, and the price of labor. The labor required is generally the cheapest about the mill. A few figures from practice show that hand picking is an inexpensive process even when compared with the cost of milling per ton of crude ore, and astonishingly inexpensive when compared with the milling cost per ton of concentrates produced. Hand picking is often made use of on the Rand for removing waste from fairly low-grade gold ores where milling costs are only $1.10 per ton. From 10 to 30% is picked out with native labor at 50 cents per day at a cost of 14 cents per ton picked out. The average saving in this district as a result of hand picking is about $2.20 per ton of waste picked out, besides the cost of transporting from the rock houses to the mills. Obviously a considerable saving would result even with labor at $3 to $3.50 per day. The waste picked out in this way in some plants assays less in gold than the tailings from the cyanide plant. Hand sorting is extensively practiced in European zinc mines, including some with a galena-blende-siderite mixture, and at Leadville, Colorado, where a large part of the lead is prepared for market in this manner. In picking ore at the Moyer mine at Leadville, one man is able to produce in a 9-hour shift, 10 tons assaying 31% zinc, making the cost of the latter 30 cents per ton. At the Square Deal mine in Wisconsin, the ore is passed over a ⅝-inch grizzly and delivered to a picking belt where one boy paid $1.50 a day, picks out 20 tons of waste rock per shift, making the cost 7.5 cents per ton, whereas if this waste was run through the mill the milling cost would be 30 cents per ton. One can safely reckon that, with proper facilities and ore crushed to 1½-inch size, with wages 37½ cents per hour, on ore yielding 6% lead and 12% zinc, hand picking can be carried out for two minerals at an average cost of 66 cents per ton of mineral produced.

Table 65 gives estimated costs of picking galena of different sizes when the ore passes automatically in front of the pickers. Where the larger sizes are picked on floors instead of on belts or revolving tables, the quantities stated in the tables are probably too high and the cost too low; and, moreover, the picker would probably become exhausted when picking 6-inch cubes at the rate indicated. The table, however, has its value as showing how rapidly the quantity diminishes, and the cost per ton increases, as the size of the individual particle diminishes. Estimates for other minerals can easily be made: for example, in picking quartz the quantity would be $\frac{2.6}{7.5}$ times that in the table for any size, and the cost per ton would be $\frac{7.5}{2.6}$ times that given in the table, 2.6 and 7.5 being the specific gravities of quartz and galena respectively.

TABLE 65. — ESTIMATED COST OF HAND PICKING GALENA.

	Weight of a Single Lump of Galena.	Seconds Required to Pick one Lump.	Weight of Galena Picked in Ten Hours.	Cost per Ton Picked Out. Wages at $1.00 for 10 Hours.
	Pounds.		Pounds.	
6-inch cubes	58.46	42	50,100	$0.040
5 " "	33.83	24	50,750	0.039
4 " "	17.321	12	51,970	0.038
3 " "	7.308	5	52,620	0.038
2 " "	2.165	3	25,980	0.077
1½ " "	0.9134	2	16,442	0.122
1 " "	0.27061	1	9,743	0.205
½ " "	0.11421	1	4,112	0.486
¼ " "	0.03383	1	1,218	1.642

§ 271. PICKING TABLES OR BELTS. — The broken ore, after having been

screened for the removal of the fines and rinsed off to facilitate the picking operation, is brought upon the picking tables or belts as the case may be.

There are five classes of picking tables or belts in use: (1) stationary horizontal tables; (2) stationary sloping chutes; (3) shaking tables; (4) belt, rope or plate conveyors; and (5) revolving circular tables. Stationary, horizontal tables may be fed automatically or by barrow, but they are discharged automatically. Tables of the three remaining classes are fed and discharged automatically.

§ 272. STATIONARY TABLES, on which the ore rests, are horizontal or nearly so. They are generally long and narrow, with a tank at one side for cleaning the ore before it is shoveled to the table. The rinsing is sometimes done on the table with a hose. They have a track for barrow or car for bringing the ore, and have means for disposing of the various products by boxes, hoppers, or chutes.

The table shown in Fig. 115 is 12 feet long, 3 feet 1 inch wide, with a tank, *A*, on one side, which has, an inch or two below the surface of the water, a horizontal plate perforated with ¼-inch holes, on which the ore is dumped and rinsed, and from which it is shoveled to the table, *B*, for the pickers. The table slopes toward the tank 1½ inches per foot (7° 8′) for drainage.

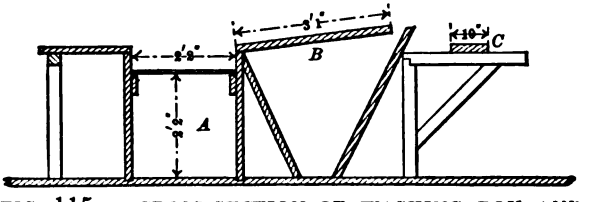

FIG. 115. — CROSS-SECTION OF WASHING BOX AND PICKING TABLE.

Four pickers sit in a row upon the seat, *C*, which consists of a plank supported by brackets. They pick poor rock into wheelbarrows behind them, and scrape the good ore into the hopper beneath, which discharges by a gate into a car on the floor below. It would be easier for the pickers to deliver the ore forward rather than backward, but no convenient way of doing this seems to have been found. In cold weather the pickers are warmed by exhaust steam which passes through pipes over the table, thence beneath the seat, and finally through the washing tank.

§ 273. PICKING CHUTES. — Chutes varying in width, length, and depth, and having slopes ranging from 20° to 40° are placed in some mills so that the ore in passing from one machine to the next must pass over them. They usually have checks placed in them to control the flow of ore and seats over them on which the pickers sit. These chutes are often wider at the receiving or upper end than at the discharging or lower end. The men usually pick out high-grade material and waste, including chips of wood, rope ends, etc., while the remainder, or milling ore, goes forward to the next machine.

An automatic slate-picker, consisting of a chute with a specially designed slotted bottom, is used for cleaning coal. It operates by virtue of the flat shape of the slate.

§ 274. SHAKING TABLES. — Bartlett's picking table is an inclined, flat table, divided into a number of conveying troughs by longitudinal partitions, and receiving a lengthwise shaking motion from eccentrics. The table is inclined about 1 inch in 9 inches, or sufficiently to cause the ore to move down the slope. A screen at the upper end, with 0.25-inch holes and a spray pipe for wash water, removes the fines; a wide central conveying trough brings the rock; and three narrow troughs on each side receive three qualities of picked material. These troughs extend from the screen at the upper end, the whole length of the table, and deliver the various products into separate bins. The

table is 18 feet long, 4 feet 4 inches wide, and moves back and forth on rollers, 200 times a minute, a distance of 2 inches. The table treats 5 to 10 tons per hour, and, with breaker and elevator, the cost of treatment is about 15 cents per ton.

§ 275. BELT, ROPE, AND PLATE CONVEYORS are endless belts passing over two drums with means of taking up the slack and of supporting the two horizontal parts of the belt. The belts are made of rubber, of steel plates or pans, and sometimes of rope matting, of wire cloth, of wire matting, or wooden billets. Pickers can stand on each side and pick into either boxes or barrows, or into a central trough upon the belt. Rubber picking belts are made extra heavy, 32 to 36 inches wide, and so supported upon idlers as to give a broad flat surface with narrow raised edges. They travel from 30 to 60 feet per minute and are sufficiently strong to stand spalling directly upon their surface. The material occurring in greatest quantity is allowed to remain on the belt until it reaches the delivery pulley, whence it drops either directly into the breaker or upon a belt conveyor. This second conveyor is frequently placed directly under the picking belt, parallel with it, and far enough back to receive the undersize from the grizzly as well as the discharge from the picking belt.

At a mill in Sardinia, sizes larger than 30 millimeters in diameter are picked by hand on an endless wire belt. All the valuable ore is removed, waste being allowed to fall into cars at one end. The belt is supported by two series of rollers. At the ends it passes around two drums, of which one supplies the tension as well as the motive power. The belt is 0.60 meter wide, woven of galvanized wire 3.5 millimeters in diameter, twisted in flattened spirals and joined by transverse wires. This renders it easy to lay open the belt in order to shorten it, or to change a defective part. The velocity of the belt is approximately 24 feet per minute. With favorable ores a speed of 40 feet per minute can be used. The height of the belt from the ground varies from 0.60 meter to 0.75 meter, according to the stature of the pickers. For a length of 10 meters, 1.25 horsepower is required. If the feed is very regular 3 tons of material may be sorted per hour. At Monteponi an average of 1,800 kilograms per hour is obtained in picking material of highly irregular size.

The same system of sorting is applied to the tailings from the jigs which treat sizes from 20 to 30 millimeters and from 14 to 20 millimeters, in order to extract from this waste material the hydro-zincite and spongy zinciferous limonite which cannot be separated by gravity from the dolomite.

A plate conveyor has been used for coal, of such form that the waste can be picked from the upper part of the belt and put upon the lower part. Each part delivers its product automatically.

§ 276. SPEED AND CAPACITY. — The ordinary speed of belts is 35 feet per minute. When picking 3-inch lump material on a 36-inch belt running 35 feet per minute with material weighing 100 pounds per cubic foot, we have a capacity of 35 tons per hour. Under the same condition a 24-inch belt would have a capacity of 20 tons per hour. For a given width within reasonable limits the capacity is proportional to the speed and to the average size of the lumps carried, *e.g.*, the above conveyor running 42 feet per minute instead of 35, has a capacity of 41 tons per hour. For close work the speed should be reduced.

§ 277. A REVOLVING CIRCULAR TABLE has an annular picking surface, usually sloping, upon which the ore is fed from a chute and from which, after the circuit is completed, all that has not been picked off is automatically removed by a fixed diagonal scraper. These tables may be either suspended and driven from above or supported and driven from below, the principle of use being the same in both cases. They are built in different sizes ranging from 11.5 to 30 feet in outside diameter and are run at a rate of 15 to 40 feet

per minute. The more pickers, or the less material to be picked out, the higher may be the speed. Fig. 116 shows one form of a supported revolving table which clearly shows the principle and method of operation. The table top runs on ball bearings; the ball races beneath the same, and the race in the annular-shaped table top, form the guides. In this way friction is reduced to a minimum and the table is rendered easy to drive. The gear drives the annular wheel of the table top direct and imparts to the same a smooth uniform motion. This is of importance not alone for the work of picking itself, but also for the work people. In special cases the annular picking surface can be inclined

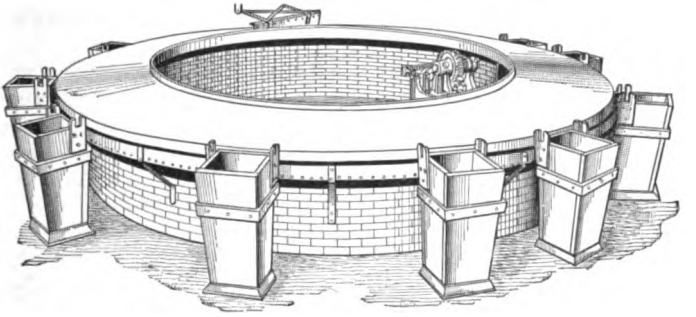

FIG. 116. — SUPPORTED REVOLVING PICKING TABLE.

inwards as well as outwards, thus permitting of picking being done simultaneously on two kinds of ore, different in size or nature. The removal of the picked product is by a scraper, as is shown in the cut. Pickers may stand on both sides of the larger tables to work and they throw the picked material into the hoppers beside them. Assays of the products obtained by the last picker will show whether the picking is carried too far or not far enough. The surface of the tables is either wood or plate iron. When the latter is used it may be perforated to drain off the rinsing water, or the tables may slope gently toward the edge so that the water will run off into a launder. The rinsing, however, is sometimes done before the ore reaches the table.

In the Rand district, South Africa, circular tables are used which consist of an annular picking surface of 25 to 30 feet outside diameter and without any central construction, the table being supported on rollers beneath as shown in Fig. 116. It is driven by bevel gearing beneath. Pickers stand inside as well as outside of the table. Rollers fastened to the under side of the table and running on a fixed rail have been tried, but were given up because pieces of rock fell on the rail and caused trouble.

An intermittent motion has been applied to round tables, by means of a ratchet and pawl, because a uniform speed of revolution tends to make the pickers dizzy.

§ 278. COMPARISONS. — Moving tables are discharged automatically, while stationary horizontal tables must be discharged by hand. When more than one mineral is to be picked out, moving tables have the advantage that each picker selects only one grade, and therefore does better work; but, on the other hand, some managers prefer to have a single picker do all of the work on any batch of ore, because that fixes the responsibility, and in such cases fixed tables must be used. The fixed tables have the further advantage that they cost much less. Of the moving tables, the supported form shown in Fig. 116 finds favor over the suspended types for various reasons, one of which is because it saves mill height. Some, however, are willing to sacrifice height for initial cost, and

the suspended types are cheaper to install than the supported types or belts. Picking belts, although quite expensive to install, are fast gaining in popularity.

Experience has shown that it is best for pickers to throw the sorted material away from them; the annular tables and the belts are admirably adapted to do this.

A simple scheme for inviting the picker to get high quantity while holding him to good quality is to pay him a stipulated sum per ton on the product picked, provided it assays above or below certain standards.

§ 279. COBBING DEVICES. — Wood, hammer heads, pick points, etc., are often picked out by hand. Machines known as magnetic cobbers are also utilized to prevent stray iron from getting into the breakers. This class of machines will be discussed under Chapter XIV. Under Chapter XV. also will be found a very interesting device for the removal of wood from mine ore before it goes to the breakers.

CHAPTER IX.

PREPARATION OF THE CRUSHED ORE FOR CONCENTRATION.

In order to concentrate and separate the valuable minerals in the crushed ore some sort of preliminary treatment is usually necessary. There are two very different methods of treatment. First, we may divide the crushed ore into a series of products in each of which the grains are approximately of the same average size. Second, we may divide the ore into a series of products, in each of which the grains are approximately of equal settling. There are limitations to each of these methods and neither one accomplishes exactly the end set forth. This general statement however is sufficient for the present and its limitations will be understood as we study the various devices that are used for the preliminary treatment of the pulp. The purpose of the present chapter is to describe the devices themselves and their mode of operation. The theory will be taken up in the following chapter.

Screen Sizing.

§ 280. Screens or Sieves are surfaces with holes in them, which serve to separate the finer particles, which can pass through the holes, from the coarser, which cannot; the purpose of screen sizing being to divide the ore into such a series of products that the concentrating machines which follow (jigs, magnetic concentrators, etc.) can readily separate the values from the waste. They may be classified as follows:

A. Stationary screens.
   1. Grizzlies.
   2. Perforated plate and wire cloth for medium and fine work.

B. Moving screens.
   1. Shaking screens or riddles.
   2. Revolving screens or trommels.
   3. Belt screens.

Stationary Screens.

§ 281. Grizzlies or Bar Screens. — These are screens for separating coarse from fine ore. They are usually made of stationary bars, placed at a definite distance apart. (See Fig. 117.) This distance limits the size of particles which can pass through the screen. The two products they yield are called undersize and oversize, the former containing the particles that are small enough to go through between the bars, the latter those that are not. The grizzly is set at such an angle that the ore will slide upon the bars automatically. The angle for quartz ores is usually 45°. Some minerals slide at much less angle. Grizzlies used in mills are naturally divided into two classes: (1) Those which relieve the breaker, the sorting table or the spalling floor of the fine ore; (2) those upon which hand sorting is done at the same time with the screening. In the first class the bars are nearly always set at an angle at which the rock will slide freely; in the second class a much gentler slope is used.

To make the ore slide as easily as possible, the bars are always placed with their lengths in the direction of steepest slope. They are supported at both ends, as shown in Fig. 118. Their lateral flexibility, which might cause the bars to spring apart and allow large lumps to pass through, is overcome by bolts running across the grizzly through holes in the bars, with space thimbles placed

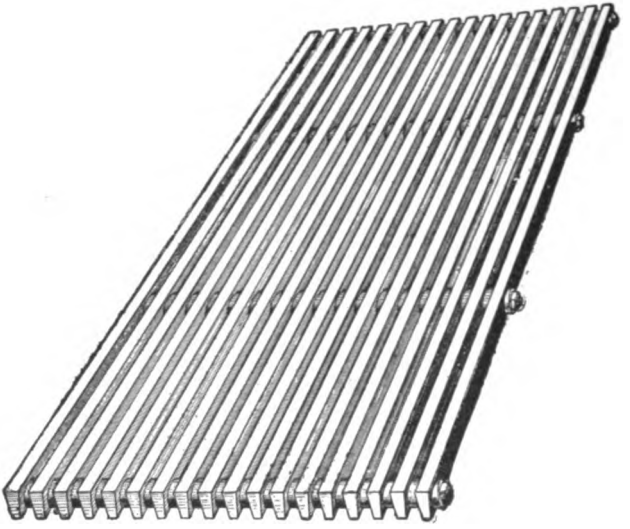

FIG. 117. — GRIZZLY OR BAR SCREEN.

on the bolts between the bars. (See Fig. 117.) The sides of the grizzly should be walled in with heavy planks to confine the ore. The bars are generally strong enough to bear, without intermediate supports, the heavy loads of ore that are sometimes dumped upon them, the strength and weight being proportioned to the weight of ore dumped at one time. The length and width are proportioned to the *volume* of ore dumped at one time and to the percentage of fines. The bars should have such a cross-section that the spaces will widen from the upper to the under side, thus insuring a free discharge of the undersize. Fig. 117 shows the commonest form of bar.

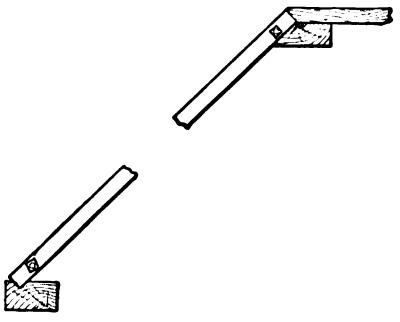

FIG 118. — METHOD OF SUPPORTING GRIZZLIES.

§ 282. PERFORATED PLATE AND WIRE CLOTH SCREENS FOR MEDIUM AND FINE WORK. — The Rowand incline screen shown in Fig. 119 is a good example of this form of screen. The screens themselves are of needle-slot punched plate and are carried in a girder of ¼-inch plate. The girder inclines 60° with the horizontal while the screening surface inclines 40°. This screen is used for screening dry ore. The dry ore entering at the top accumulates on and behind the steel-wearing plate *P*, until it has attained its angle of rest 45°, when it falls to a second similar plate before going over the screen. The over-size passes over similar plates to the next screen. In this manner all the parts are protected from wear except the wearing plates and the screen plates themselves. The dimensions of the parts are shown in the cut.

In screens of this type the slots punched in the screen plate must be at least one-half inch long for efficient working. With slots less than one-half inch long, particles fail to get through the holes. This rules out horizontal and diagonal slots. The slots are usually placed in line, one below the other, the objection to this arrangement being overcome by the irregularity in the path of the particle. Staggering the slots has a tendency to weaken the plate. These screens have a large capacity and are inexpensive in upkeep. In a screen of this type designed by Edison, the wear was almost nothing after screening 80,000 tons of perfectly dry ore. Edison estimated that 1% of moisture in the ore multiplied the wear by about 7.

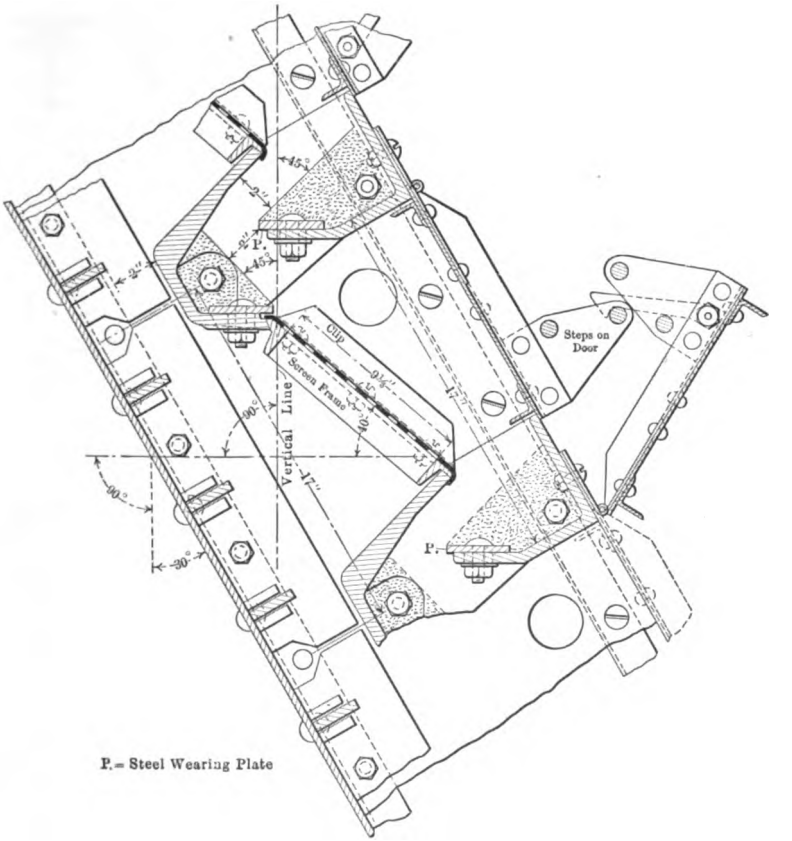

FIG. 119. — LONGITUDINAL SECTION OF ROWAND SCREEN.

In regard to the thickness of plates for this class of screening it may be said that thin plates are usually preferred, as the tendency to blind is much less where there are fewer chances for points of contact.

Screens of this type have shown an efficiency as high as 85%, *i.e.*, 85% of the particles fine enough to pass the openings in any given screen did so.

§ 283. THE PRATT ORE SIZER (see Fig. 120) differs from the usual forms of stationary screens in that the pulp (ore and water) to be sized is fed to the screen through a revolving distributor. The apparatus consists of a conical screen with 60° angle, of plate-steel punched with holes 1½ millimeter in diameter. The diameter at the top is 4½ feet. In the middle is a conical diaphragm (1)

sloping inwards toward the center hole. The distributor (2), 14 inches deep and 21 inches in diameter, makes 125 revolutions a minute. This distributor has six pipes (3) at different heights and looking different ways, for distributing the sand to the screen. The undersize is rapidly forced through without blinding the sieve, the oversize passes down to the diaphragm (1) and is fed into

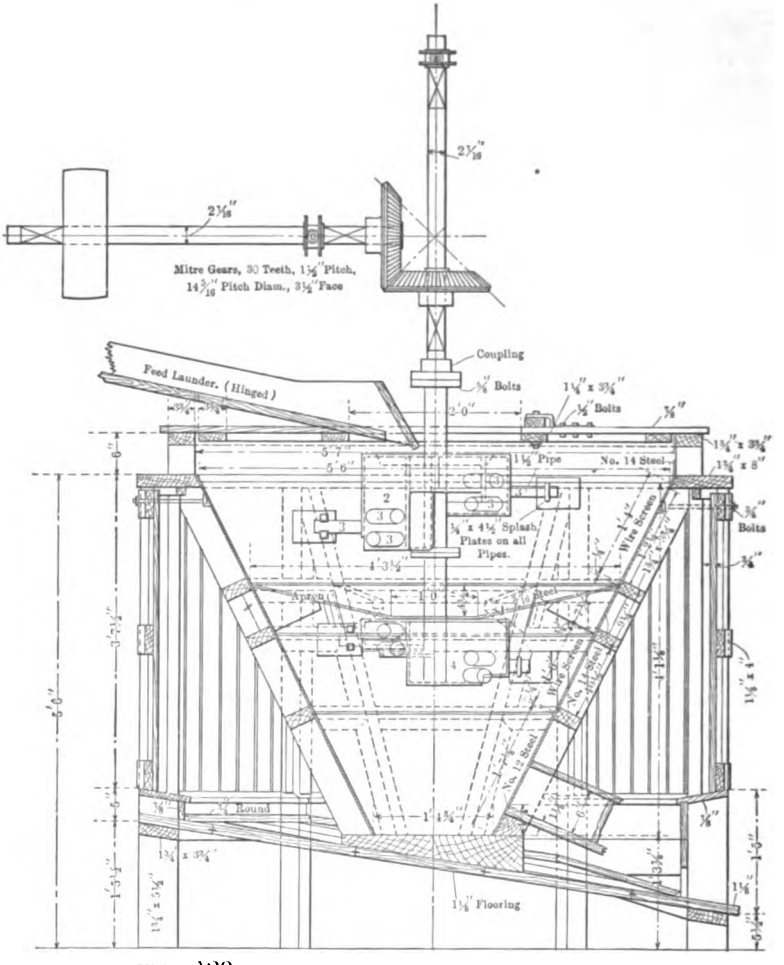

FIG. 120. — SECTION OF PRATT ORE SIZER.

a lower revolving distributor (4) which distributes the sand to the lower part of the screen. This screen yields from 150 tons feed per 24 hours, 90 tons of oversize, 3 millimeter to 1½ millimeter, and 60 tons undersize, 1½ millimeter to 0. The oversize carries 11½% of fines.

The screen lasts 3 weeks. It is put on in 12 parts, 6 around the upper portion of the cone and 6 around the lower.

Moving Screens.

§ 284. Shaking Screens or Riddles. — Riddles are shaking screens with plane surfaces. They may have less slope than fixed plane screens because

the motion of the screen is transmitted to the ore, conveying the oversize toward the discharge end. Riddles are divisible into four groups: (*a*) Shaking screens, which have an endwise or sidewise motion in the plane of the screen, or nearly so, with or without a bump; (*b*) Pulsating screens, which have an up and down motion, perpendicular, or nearly so, to the plane of the screen; (*c*) Gyrating screens with a circular or elliptical motion in the plane of the screen; (*d*) Gyrating screens with motion in a vertical plane parallel to their lengths. The screen plates or cloths of all these classes are mounted in frames of wood or iron, with or without supporting bars beneath the screen as may be needed.

The frames of the shaking screens are supported from suspending rods or chains above, and their slope regulated by winding or unwinding the chains at one end, holding it in place by ratchet and pawl; or they may be supported upon toggles or wheels below, and their slope varied by elevating or depressing the supports of these at one end, by screws or wedges. The frames of the pulsating screens are pulsated by eccentrics below, transmitting power through springs, or by a cam, spring, and bumping post above. These screens move in guides. The frames of gyrating screens are supported from suspending rods or by conical or spherical wobblers beneath, and the slopes regulated in the same way as for shaking screens. Shaking, pulsating, and gyrating screens will all run more smoothly, and will shake the mill less if they have counterpoises to balance the shake.

§ 285. *The Ferraris Shaking Screen* (see Fig. 121), is set horizontally on the

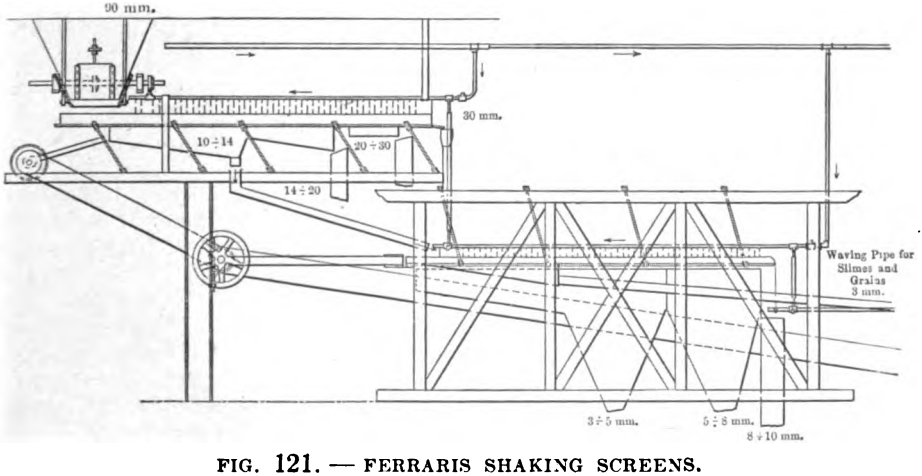

FIG. 121. — FERRARIS SHAKING SCREENS.

upper ends of laminated beechwood supports on each side. Driving is done by an adjustable eccentric running at 350 revolutions a minute with a throw of 25 to 32 mm. (1 to 1¼ inches). The supports slope upward and backward to the screen frame at an angle of about 65° with the horizontal, and act as springs. The screen thus receives an upward, forward motion on the forward stroke and a downward backward motion on the return stroke, which causes the ore to move rapidly forward.

In the illustration there are two screens, the right-hand one being suspended from above but in such a way as to obtain the same effect as is obtained when the screen is supported from below. The left-hand screen has 10 mm. round-hole screen on the first section, followed by 14, 20, and finally 30 mm. round-holes. The products are delivered as shown in the cut The undersize of the

10-mm. screen and a portion of the undersize of the 14-mm. screen goes to the right-hand screen which has 3, 5, 8, and 10-mm. round holes and delivers its products as shown in the cut.

When run in the usual way the screen does not work well for ore finer than 5 mm.; but Sanna has designed a successful modification for fines, in which the screen is suspended on sloping spring rods over a hopper-shaped box full of water, and just dips into the water on each backward downward stroke. This keeps the holes free, but the immersion must be only very slight or the

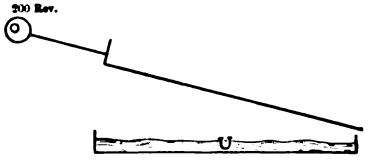

FIG. 122*a*. — SHAKING RIDDLE.

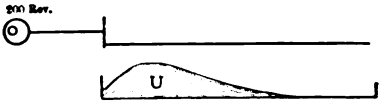

FIG. 122*b*. — SHAKING RIDDLE OPERATING ON FERRARIS PRINCIPLE.

forward movement of the ore will be hindered. Water is fed to the hopper-box constantly, to supply the spigot discharges, and the level is maintained by a constant overflow. With this arrangement the screen is said to work without difficulty on ore as fine as 0.5 mm.

This screen is much used in Sardinia and Mediterranean countries and possesses points of merit which the author wishes especially to emphasize. Some years ago the author employed, for testing purposes, a shaking riddle such as is shown in Fig. 122*a*. This riddle was inclined at a small angle and was actuated by an eccentric making 200 revolutions a minute. It was found that the undersize *U*, which passed through the screen into the pan beneath, made a nearly uniform layer, showing that the device was not doing its work properly. The Ferraris principle was applied to the screen with the result shown in Fig. 122*b*. In the latter case the undersize *U*, instead of forming a uniform layer in the pan, took the form shown in the figure.

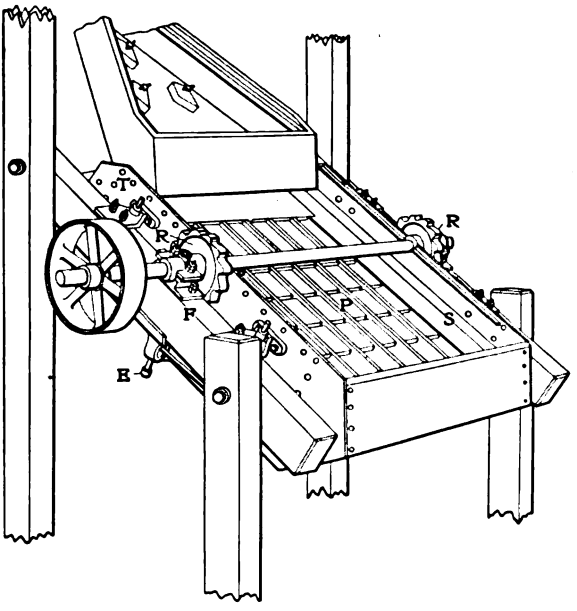

FIG. 123. — THE IMPACT SCREEN.

These screens have displaced trommels at Monteponi and other Sardinian plants; and at the former place 3 m. (9 feet 10 inches) of mill height was thereby saved. They require less power and have about double the capacity of trommels 1 m. (39.4 inches) in diameter, and the wear is so slight that the screen plates at Monteponi have not needed repairs in a year.

§ 286. PULSATING SCREENS. — There are numerous examples of this type of machine, but none of them have been generally adopted by the mills. They all have a tendency to shake themselves to pieces. The Impact Screen, which will be described, is perhaps as much used as any of the various machines of this type on the market to-day.

§ 287. *The "Impact" Screen.* — The "Impact" screen is shown in Fig. 123. The vibrating screen frame *S* is flexibly supported by the elliptical carriage spring *E*. The spring pressure is adjustable, and forces the vibrating frame upward against four cushioned stops. To this vibrating frame motion is imparted by two ratchets *R*, operating as multiple cams and mounted on the fixed frame *F*. The cams force the screen down, and the springs bring it back against the stops with a sharp upward impact. Beneath the screen is a series of pans *P*, which serve to retain enough water to keep the meshes open when the machine is used for wet screening. When used for dry screening, a housing is provided.

§ 288. GYRATING SCREENS. — The Coxe gyrating screen usually has four sieves, 4 feet wide, 6 feet long, sloping about 5°, placed one above another in a box made of cast iron, 1 foot to 2 feet deep, according to the number of sieves. Four sieves require a depth of 15 inches. The box is supported at the four corners upon rolling pieces, each in the form of two obtuse cones, placed base to base. (See Fig. 124.) They roll with their lower apices at the centers of discs upon the supporting frame. Upon the cones and attached to the under side of the screening box, are four other discs which roll upon the cones and complete the support of the box.

The gyrating crank is placed beneath the sifting box on a short vertical shaft, and for coal has a radius of about 2 inches and a counterweight to balance the centrifugal force of the screens. The screens, when used for dry screening, make 145 gyrations per minute; when water is used, a higher rate is needed.

The capacity of this screen for anthracite coal is as follows: Pea (on $\frac{5}{8}$ inch). 16,800 pounds per hour; buckwheat (on $\frac{3}{8}$ inch), 12,000 pounds; rice (on $\frac{3}{16}$ inch), 9,600 pounds; barley (on $\frac{3}{32}$ inch), 6,000 pounds per hour.

§ 289. COMPARISONS. — Among shaking screens the Ferraris screen has the advantage as far as capacity and the saving of mill height is concerned. Plain shaking riddles have less capacity than pulsating screens and show more wear. The gyrating screens are economical in mill height and show high capacity and freedom from blinding. The gyrating motion tends to prevent blinding.

§ 290. REVOLVING SCREENS OR TROMMELS may be divided into three classes: (*a*) Cylinders and prisms; (*b*) Cones and pyramids; (*c*) Spirals. They are designed to screen ore with but little fall, and to avoid the vibrations caused by shaking screens. This is made possible by causing the particles to slide by the revolution of the screen, instead of by the steep slope or the shaking movement used in other forms. When the ore is once in motion, a very slight slope in the direction of the length will cause it to move forward. The actual path of a particle upon the surface of the screen is in the form of a screw thread or helix, and it will be called the helical path. The capacity of a trommel when doing good work depends upon the speed with which it can separate grains above a certain size from those below that size.

In the use of trommels there are two practices. One seeks the minimum fall by using a very gentle slope, and to remedy the consequent thick bank of ore by increasing the length; but the result is that the thick ore bank hinders good screening, there is increased wear on the screen, and more power is required for driving. The other practice seeks for more individual treatment of the particles by using steeper slope. Incidentally, by the rapid passage of ore, the consequent thin bank of ore, and by the lightness of the load at any moment,

it obtains increased capacity, diminishes the necessary length of screen and the power to drive, and lessens the wear on the screen.

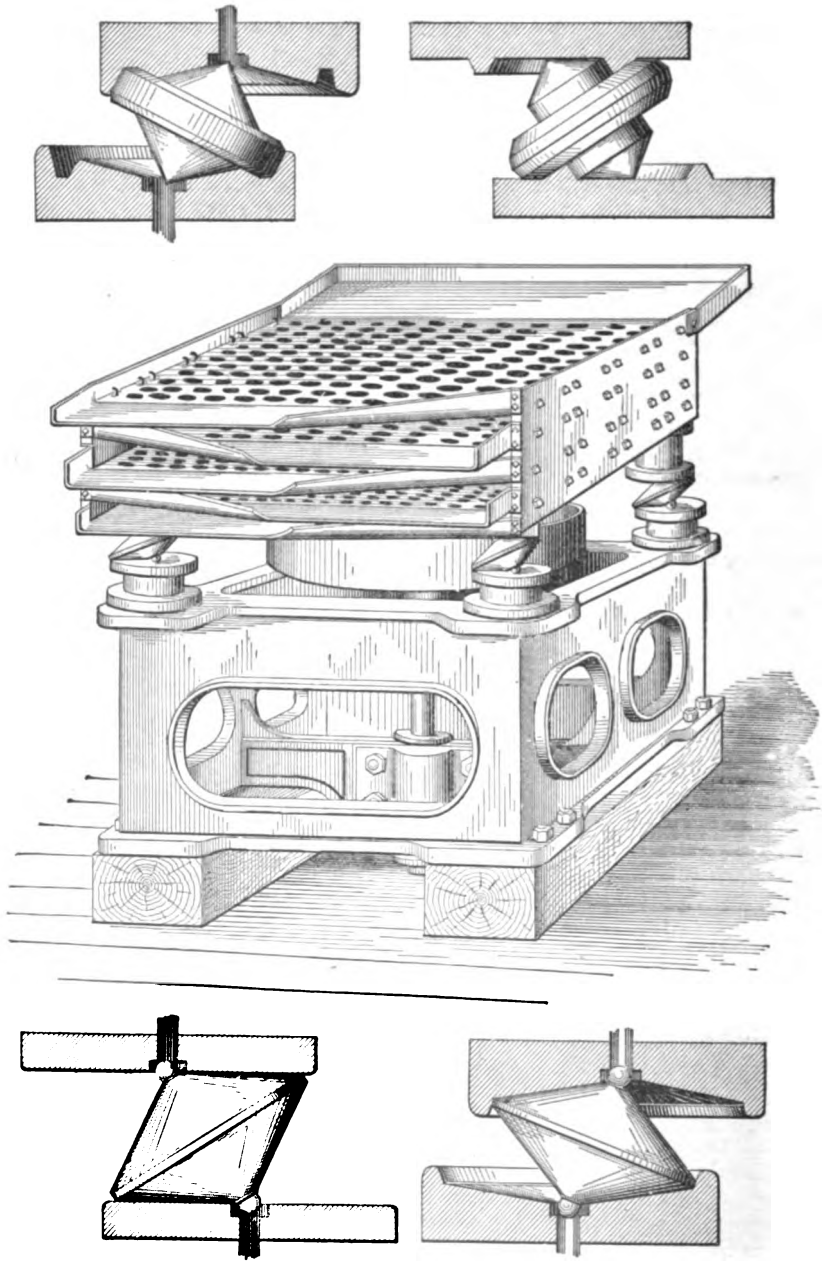

FIG. 124. — COXE GYRATING SCREEN.

By far the greater number of trommels used in the mills are cylindrical and they will therefore be discussed first.

A cylindrical trommel consists of a shaft of wrought iron or mild steel and usually 2½ inches in diameter. This shaft is longer than the trommel as a whole and is mounted on boxes so supported as to give the required slope. (See Figs. 125 and 126.) On the shaft are two or more spiders with radial spokes, usually

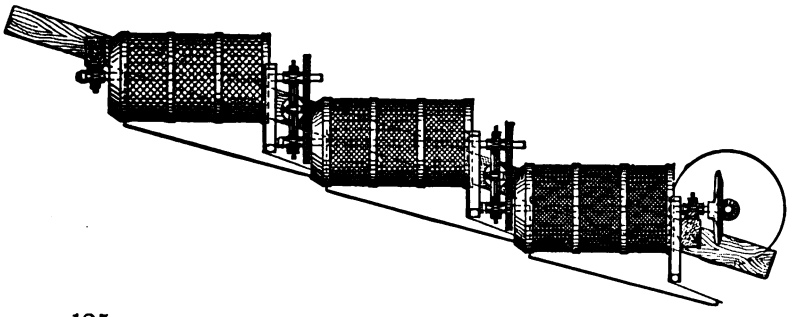

FIG. 125. — A SERIES OF TROMMELS DRIVEN BY TOOTHED GEARS.

four in number. (See Fig. 127.) The spiders may be fastened to the shaft either by keys or set screws. The arms of the spider terminate in T ends.

The screen plate or cloth is attached to the T ends or bent ends of the spider arms in a variety of ways. Wrought-iron tires may be riveted to the T ends, and the plate or cloth wrapped around these tires and held by tightening hoops,

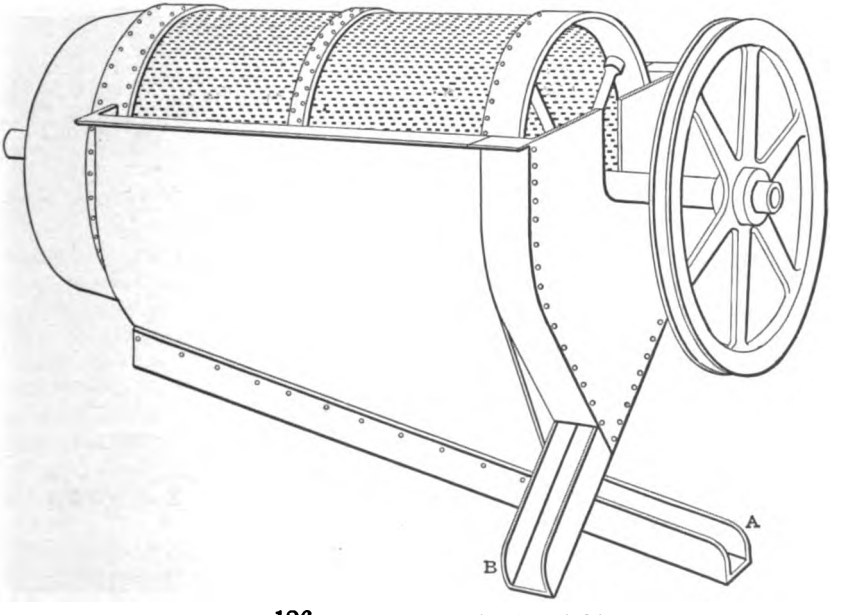

FIG. 126. — REVOLVING TROMMEL.

to the ends of which lugs are riveted for the insertion of draw bolts; or this same method is used without the inside tires. Fig. 127 shows the latter method. The lugs and draw bolts are shown in Fig. 128. In some cases the tires are riveted or bolted to the T ends, and the screens are bolted to these tires, in

addition to having the outside tightening hoops; while in other cases they are riveted to the tires and do not have the tightening hoops.

At the upper end of the cylinder is a short receiving cone of plate iron to prevent ore from backing out of the feed end. To catch the undersize, there is, beneath the trommel, a casing of wood or iron, with either a semicircular or a V-shaped cross-section, and having its sides extended vertically somewhat above the axis of the trommel. The casing is so constructed that it delivers the undersize, which passes through the screen, in a spout near the lower end, and the oversize in a second spout at the lower end. A dividing partition prevents these products from mixing. The casing has a steeper slope than the trommel. The shaft is driven from the lower end.

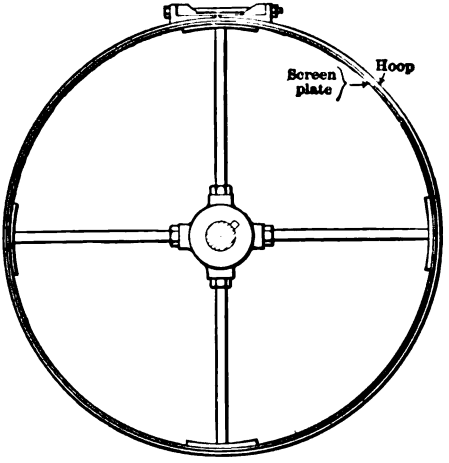

FIG. 127. — ATTACHMENT OF TROMMEL SCREEN.

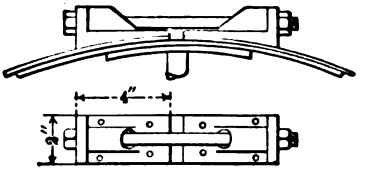

FIG. 128. — DETAIL OF A HOOP TIGHTENER FOR A TROMMEL.

§ 291. *Size of Trommels.* — The trommels found in the mills vary considerably both as to diameter and length. It may, however, be stated that 3 feet is a favorite diameter and the most usual lengths are from 6 to 9 feet.

The number of revolutions per minute and other factors being the same, the larger the diameter of the trommel the wider and shallower will be the bank of ore, and consequently the better will be the screening; but the greater will be the tendency to blind up the holes, due to increased centrifugal force. The trommel must be long enough to insure each particle a reasonable number of chances to pass through a hole. Evidently the deeper the ore bank the longer the trommel must be; but if the bank is too deep good screening is impossible. It is also affected by the size of the ore the greater the proportion of undersize: that is nearly as large as the screen holes the more difficult is the separation, and therefore the longer should the trommel be.

§ 292. *The Slope* is a most important factor, as it largely affects both the capacity of the trommel and the quality of the products. Other things being the same, the steeper the slope the more rapid will be the passage through, the shallower will be the bank of ore, the more nearly will individual treatment of the particles be secured, and in consequence the greater will be the capacity. Obviously the slope cannot be increased to advantage indefinitely, because at 45° a flat screen works freely (when run dry), and the flat screen uses the whole area while the trommel uses only a narrow band of screen plate at one time.

In practice we find slopes as low as ¼ inch to the foot and as high as 3 and

even 5 inches to the foot for special purposes. The most usual slope for trommels doing wet screening is from ¾ to 1¼ inches to the foot. Trommels doing dry screening require a little more slope than trommels screening wet and may have a slope of 2 inches to the foot.

§ 293. *Revolutions* range from 8 to 30 per minute; 16 to 20 is correct for a 36-inch trommel.

Increase of revolutions within certain limits increases speed of conveying the particles through the trommel, which thins the ore banks and thereby improves screening. This speed is dependent on two facts: (*a*) The particle is carried up the side of the trommel and rolls down to a point nearer the lower end of the trommel than that at which it started, its path in space having the form of a saw tooth; (*b*) Centrifugal force makes the ore cling to the side and carries it higher, but makes the angle of the saw tooth, or pitch angle of the helical path, narrower. The more rapid revolution, then, loses on conveying speed by diminishing the pitch angle, but gains more than it loses, by the increased number of saw teeth in its path per minute. This increase of speed of conveying the ore through the trommel goes on with increased revolutions until that speed is reached at which the ore will be carried over by centrifugal force, and when this speed is attained conveying power is at an end. Another fact, however, completely vetoes this use of rapid revolutions for gaining speed of screening, and that is the fact that as centrifugal force increases it tends to blind the holes of the screen, and this hindrance is so serious that it condemns altogether the seeking of great capacity by high speed of revolutions; 20 revolutions for a 36-inch trommel is as fast as should be recommended. In one mill trommels 36 inches in diameter were run at 24 revolutions, which proved to be too fast. In the opinion of the manager, 18 revolutions would have been right.

§ 294. *Materials for Screens.* — In regard to the relative advantages of punched plate and wire cloth, the following notes embody the experience of various mill men and other authorities. Plate lasts longer than cloth and generally costs less per ton of ore screened, though occasionally it is more expensive on account of high freight charges, due to its greater weight. It is stronger and therefore less liable to breakage than cloth, and it is more easily repaired when broken. In wire screens the size of the holes is not increased so much before wearing out as in the case of plate, and therefore there is less variation in the screen products; but ordinary cloth has the disadvantage that the wires are liable to spread and leave the holes very irregular in size. This difficulty, however, is overcome by the "double-crimped" cloth such as is made by the W. S. Tyler Co. This "double-crimped" cloth has been found to wear about twice as long as "single-crimped." Wire cloth generally has a larger percentage of opening and therefore somewhat greater capacity than punched plate. It however has the disadvantage that the round section of the wire makes the holes taper downward, and this with the square shape of the holes and the uneven surface of the cloth tends to blind up the screen, especially when there is considerable fiber and chips. One mill discarded wire screens for mine ore on account of chips and fiber, but uses it for re-ground middlings on account of the smaller variation in the size of holes by wear. Cloth is more liable to break before wearing out than plate, because its flexibility permits it to bend more. Trommels using punched plate must usually have less slope than the same trommel using wire screen. Where punched plate has been substituted for wire cloth without changing the slope it has been noted that the pulp would rush through the trommel carrying increased percentages of fines into the oversize products.

The Corroding Agents which call for a special metal are sulphuric acid in

iron pyrites mines, and copper sulphate in mines carrying copper sulphides. Carbonic acid may be a source of trouble, but it is not so powerful an agent of destruction as the other two substances. Copper and its alloys are the best materials for overcoming these difficulties. Kunhardt says that, for plate screens with holes finer than 2 mm., copper is better than iron; the former wears by abrading only, the latter by abrading and corroding. At Clausthal, in one case, copper cost 1.8 times as much as iron, but lasted 2.4 times as long. Phosphor bronze is better than either copper or brass.

§ 295. *Driving Mechanism.* — In a number of mills visited by the author, 29 trommels are driven by pulley and belt at the lower end, 1 by pulley and belt at the upper end, 29 by beveled gears at the lower end, 12 by gears with idler from the trommel below, 11 by gears with idler from the trommel above, 17 by chain and sprocket at the lower end from a counter-shaft, 2 by chain and sprocket at the upper end from a counter-shaft, 4 by chain and sprocket from the trommel below, 2 by chain and sprocket from the trommel above, and 1 is directly connected to a log washer shaft. This list shows that driving with beveled gears and driving with direct pulley are about equally common. The use of beveled gears has the advantage of belting to a horizontal shaft, and is probably cheaper in the end than the complications arising from sloping counter-shafts and direct pulleys. A number of trommels, also, are driven by sprocket chains. At one mill half of all the stops were caused by the sprocket and chain drive of the trommels getting out of order, but this may have been due to weak chains or sprockets. At a number of cement mills in Pennsylvania, the sprocket drive is very successfully used and gives no trouble.

Three trommels in a row may be driven at the lower end of the middle one, the other two connected to it by gears and idler, or they may be driven individually. Individual trommels are a little more independent and therefore easier to repair and handle, and their first cost is about the same as where the gears and idler are used. This arrangement would seem to be preferable to connecting trommels together.

§ 296. *Power.* — Fraser & Chalmers estimate power as follows for trommels 36 inches in diameter and 72 inches long: 1 horse-power for a single trommel, 1½ horse-power for either 2 or 3 trommels, 2 horse-power for either 4 or 5 trommels, and 2½ horse-power for 6 trommels, to which 15% should be added for friction of shafts, slip of belts, etc. This shows that the power is not considered to increase proportionally with the number of trommels. The increase in power is not at all proportional to the increase in diameter: a 36-inch trommel requires but slightly more power than a 30-inch trommel; and when its increased capacity is considered, it will be found that the power per ton of ore screened is less in a 36-inch trommel than in a 30-inch trommel; that is to say, the power per ton diminishes as the trommel increases in diameter.

§ 297. *Feeding.* — A steady feed of ore to a trommel is essential to good work. If the trommel is overdriven at times, it will surely carry into the oversize a larger proportion of the undersize than is allowable. The Tullock or some similar form of feeder is suitable, or the trommel may be fed by the undersize of a previous trommel, or by any steady machine. Some mills use automatic feeders before the first trommel. The last has one also for re-ground middlings. The usual practice in the mills appears to be to trust to the breaker or rolls for regulation.

At the upper end of the trommel there is commonly a receiving or feed cone, which projects 4 to 8 inches beyond the upper spider so that the feed spout can enter without interfering with the spider. On account of the gentle slope of the trommel, this cone is inclined 15° to 50° to the axis, to prevent the possibility of the ore being thrown out.

§ 298. *Wash Water in the Trommel.* — This is generally fed upon the outside of the up-coming side of the trommel by a spray pipe. In some mills the water comes from an overflowing trough. The object of the water is to hasten sifting by washing the fine stuff quickly through the holes. It also prevents blinding up of the holes and lays the dust. Water *must* be used on damp or wet ore. If the ore is previously dried, screening can be done without water, but in this case the trommels must be completely housed in and provided with suction from a fan, to avoid the otherwise intolerable dust that would be made. A disadvantage of water lies in the fact that wet or even moist ore wears out screens much more rapidly than dry ore; it also dilutes the pulp and so leads to loss in slimes. It is not uncommon to omit the use of water on the earlier, larger trommels. In 7 mills out of 23, dry screening precedes wet; in the other 16 water is fed to the first trommel. Among the former, water is nowhere fed to a screen coarser than 9.5 mm.; but among the latter it is fed to screens as coarse as 54 mm.

§ 299. *The Duty or Capacity* of a trommel is the quantity of ore that it can screen satisfactorily in a given time. It depends upon the slope, the diameter, the speed of revolution, the length of the trommel, and the size of screen opening.

The adjustments that effect capacity are discussed in Chapter X.

When we try to formulate a rule for calculating the capacity of a trommel, we find the problem practically impossible of solution. Taking the data that is at hand, however, it would seem that in the case of a trommel set at an average slope and running at an average speed at least 1 square foot of screening surface should be allowed for every 20 cubic feet of ore fed to a 1 mm. screen per 42 hours. Cubic feet can be turned into tons approximately by multiplying by 20. Argall's rule for dry screening is 1 square foot of screen area for every 6 cubic feet of ore fed to the 30-mesh screen in 24 hours. Many screens, the capacities of which are reported, are working very much below their actual capacity. Coarser screens might be expected to have proportionately larger capacities and two examples will serve to demonstrate this point. Trommel *A* is 60 inches long and 30 inches in diameter. This gives us 39.27 square feet of screening area. Applying our rule we should expect a capacity to 1 mm. of 392.7 cubic feet per 24 hours or 19.6 tons. Now this trommel has 5.7 mm. openings instead of 1 mm., so we multiply by 5.7 and get 111.72 tons. The reported capacity is 100 tons plus returns from the rolls. Again we have trommel *B* 84 inches long by 36 inches in diameter and hence having approximately 66 feet of screen area. Applying our rule we get a capacity to 1 mm. of 660 cubic feet or 33 tons. This trommel has 12.7 mm. openings, hence we multiply by 12.7 and get 419.1 tons. The reported capacity is 384 to 432 tons. Trommel *A* makes 18 revolutions per minute and has a slope of 4° 45′, while trommel *B* makes 20 revolutions per minute with the same slope. This rule can only be applied under average conditions as to speed and slope.

§ 300. Cost of Screening. — The cost of screening in a mill varies from about 0.3 cent per ton of ore milled under normal conditions with low freight rates to from 0.7 to 0.8 cent where freight charges are high and 1.4 cents in some cases where there is acid water to contend with. Fine screening costs more and in some cases where there are a considerable number of fine screens in a mill may amount to 5 cents per ton of ore milled.

§ 301. Cones, Pyramids, Prisms. — These forms have met but little favor in this country. The advantages claimed for the cones and pyramids is that the horizontal shaft simplifies the mechanism, allowing of direct belt and pulley connection with the shaft of the trommel. The angle of the cone or pyramid becomes the angle of the slope of the screen. On the other hand, both cone

and pyramid have the disadvantage that they require special shapes of plates, which are more expensive to make and fit than the simple rectangular forms used upon the cylinders. They also have the disadvantage that the greater work of screening is put upon the small end of the trommel where the screen surface is smallest and therefore least able to sustain the wear and where the curvature is greatest, making the bank deeper and less manageable. They have the further disadvantage that the whole condition of screening is changing from the beginning to end of the trommel: if the revolution be made to suit either the small or large end, the other end will be working at a disadvantage, because the centrifugal force increases from the small end to the large end. The spiders, and the methods of attaching the screens to them, are the same as in the cylinders, except that the length of the arms is made to suit the taper of the cone.

The prisms and pyramids are made octagonal, hexagonal, or square, the edges being formed by permanent frames and the planes being filled by screen cloth or plate. Hexagonal and octagonal trommels are frequently used for dry screening.

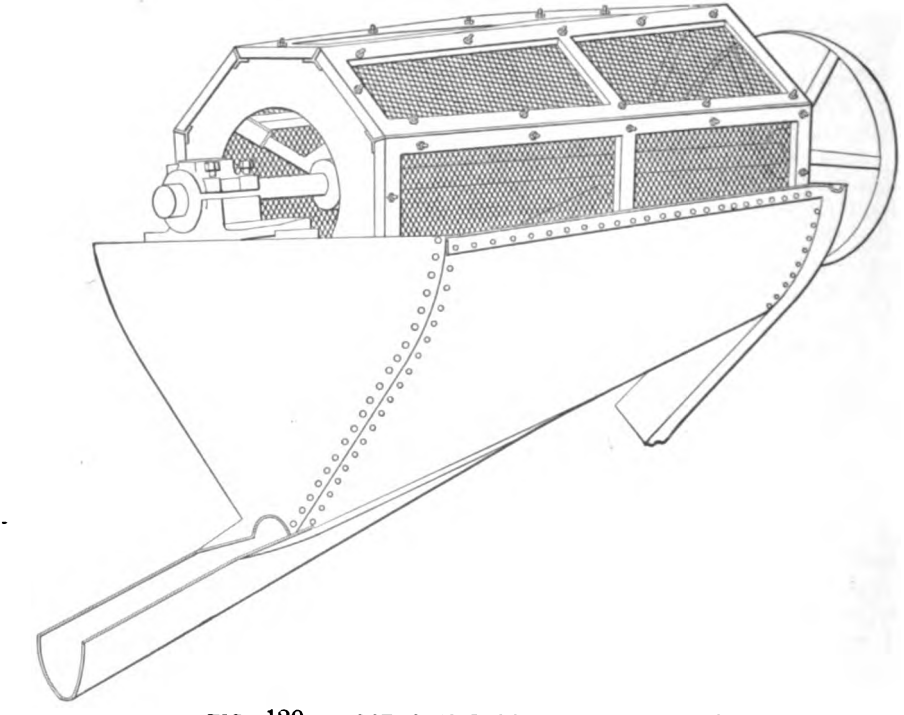

FIG. 129. — OCTAGONAL REVOLVING SCREEN.

§ 302. *Octagonal Revolving Screens.* — Among the improved sizing trommels is the octagonal revolving screen shown in Fig. 129. The object of the construction here shown is primarily to facilitate the labor of repairing plates and screen cloth by making the trommel sectional. The whole screening surface is composed of panels which are independently bolted into place. An additional advantage gained is in the agitation of the material being treated. This is especially true of the smaller sizes. Such sectional screens are made both straight and tapering.

§ 303. SECTIONAL TROMMELS. — Sectional punched and cast-plate trommels have come into use within recent years. Wire cloth has formerly been the more convenient material on account of its being more easily repaired. By making the trommel surface in sections this difficulty has been removed.

§ 304. TANDEM AND CONCENTRIC TROMMELS have screens of two or more sizes on the same shaft; in tandem trommels two or more screens form one continuous, cylindrical or conical surface; in concentric trommels two or more screens are placed one outside of the other. In tandem trommels the first or upper screen is always the finest and the others follow in order of size; in concentric trommels the inner screen is always the coarsest and the others follow in order of sizes. The object of both of these devices is to save mill fall or height and to gain compactness of plant, but both of these advantages are obtained at the expense of simplicity. The tandem form can use only two screens, or at most three, because the first screen, which receives the most wear, is the finest, and is therefore least able to stand rough usage. The concentric trommel becomes greatly complicated if a number of screens is used; and the fine screen, which is apt to be high-cost cloth, has to be made very large and is therefore very expensive. On this account two screens appear to be the maximum number of concentric screens attempted on one trommel.

§ 305. SYSTEMS OF SCREENING BY TROMMELS. — The system which meets by far the most favor in this country consists in the use of cylindrical trommels with only one size of hole to each trommel, the set being arranged in a series beginning with the coarsest and ending with the finest size. This is the best system, because it proportions the wear to the ability of the screens to withstand wear — the coarsest has the hardest usage and the finest the mildest. It also makes a more perfect separation of the coarse from the fine ore, and very much lessens the production of slimes. Abroad, the series has sometimes been divided by the following means: The ore first goes to a screen with medium-sized holes; the oversize of this to a series of coarse screens, the undersize to a series of fine screens. (See Fig. 130.) This system saves some fall, but it causes excessive wear on the receiving screen, beside complicating the arrange ment.

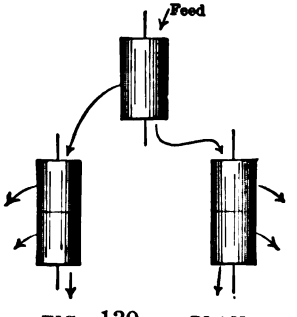

FIG. 130. — PLAN.

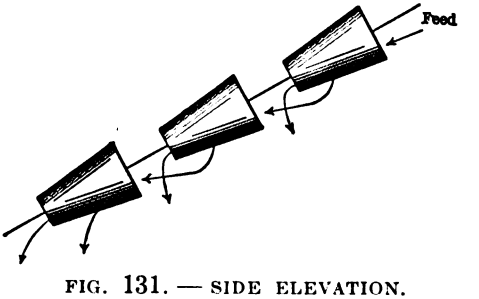

FIG. 131. — SIDE ELEVATION.

The different systems of arranging trommels may be classified as follows:

A. Trommels without special devices to diminish fall. A single size of hole for each trommel, the coarsest first.

(1) The straight line system, in which one trommel follows another, with their axes generally in one vertical plane. (See Fig. 125.)

(2) The side by side system, in which the direction of the ore's movement is reversed for each trommel. (See Fig. 132.) This system is more compact but uses a little more height and is not as simple as the preceding.

B. Trommels with special devices for minimum fall.

(1) Beginning with finest holes. Two or three different sizes of holes in a single cylinder or cone.

(2) Beginning with medium-sized holes. One trommel, with say 9 mm. holes, sends oversize to a second trommel with two or three sizes of coarser holes, and undersize to a third trommel with two or three sizes of finer holes. (See Fig. 130.)

(3) Beginning with coarsest holes.

(*a*) A concentric trommel (either cylinder or cone), with two or three screens.

(*b*) The Neuerburg system uses as many as three successive conical trommels on one horizontal shaft, with little sand wheels to lift undersize of first to second, and of second to third. (See Fig. 133.)

(*c*) The Herberli system uses as many as four conical trommels on a single inclined shaft, the ore moving from the large to the small end of the cone. (See Fig. 131.)

Comparing trommels in straight line with trommels side by side; the former require somewhat less fall; the latter arrangement is more compact, but it is

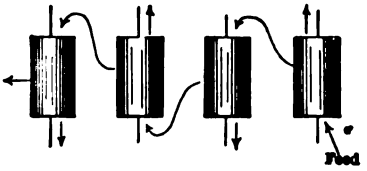

FIG. 132. — PLAN.

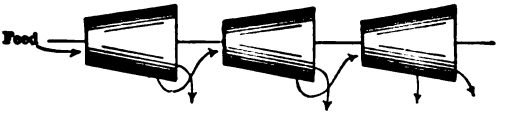

FIG. 133. — SIDE ELEVATION.

less accessible for inspection and repairs, and the compactness is often uncalled for. The loss of height from passing through the trommel is much less with the spiral than with the cylinder or ordinary cone, as it omits the conveying launders with their necessary grades. The Neuerburg design of conical trommel overcomes this loss of height by introducing little elevating sand wheels, and also simplifies the driving mechanism for a set of trommels; but to offset these advantages, it seriously complicates inspection and the replacing of worn-out screen plates.

§ 306. COMPARISON OF TROMMELS AND RIDDLES. — Owing to the fact that a riddle uses the whole of the surface at all times, while a trommel uses only a narrow strip, the former will have a much larger capacity than the latter if the slopes are such that the ore banks are kept thin; but as a rule they require greater slope. In regard to quality, the shaking action of the riddle causes it to do a high grade of screening, provided it has sufficient slope to have a thin ore bank; but the long path of the particles in the trommel, if the slope of the latter is not too gentle, brings up its quality to nearly that of the riddle, except on the finer sizes. In regard to power, the authorities agree that the riddles take more than the trommels. The trommels run more quietly than the riddles as they give no jar or shake. In regard to wear, repairs, and frequency of stops for repairs, the authorities hold that the advantage is largely with the trommels. In regard to slime making, most authorities hold that the wear of the trommel makes less slimes than the shock of the riddle. In regard to simplicity, the mounting of the screen is simplest in the riddle, while the power connections are simplest in the trommel.

OF THE UNIVERSITY OF CALIFORNIA

BELT SCREENS.

In this class called belt screens, the sizing screen is made to travel over rollers similarly to a vanner belt. In the case of the Callow screen, the belt is horizontal and runs away from the feed end. The natural sag of the belt provides a concave surface on which the material is sized.

§ 307. THE CALLOW TRAVELING BELT SCREEN. — The Callow Traveling Belt Screen is a screen of high capacity which is doing satisfactory work on extremely fine sizes, even to 150 mesh. It is shown in detail in Figs. 134*a* and *b*.

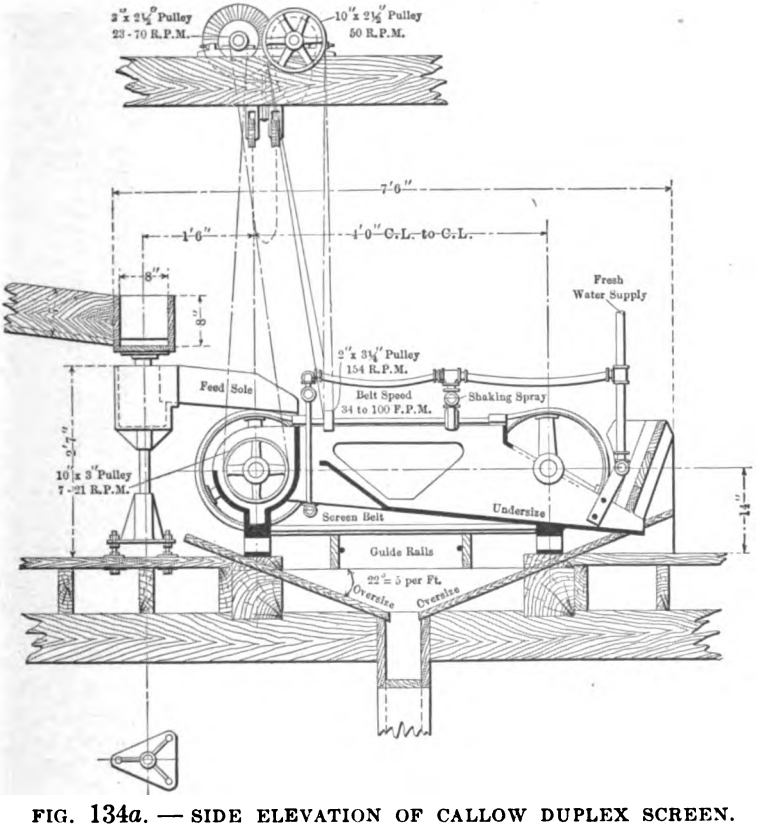

FIG. 134*a*. — SIDE ELEVATION OF CALLOW DUPLEX SCREEN.

The endless belt, 2 feet wide, is of any mesh screen from 10 to 200; and is held in position by sprocket chains at the side running over sprocket wheels. The screen is attached to the sprocket chains by means of strips of rubber which are riveted to the belt and which button onto the chains. The screen and chains run over rollers which revolve on overhung shafts, so that there are no outboard bearings to prevent the ready removal of worn-out screens; this operation consists in unbuttoning the rubber from the chain and drawing the screen off. The pulp is distributed across the width of the screen by the feed sole. The undersize is assisted to pass through the screen by a shaking spray near the tail roller. The oversize remains on the top of the screen and is removed as it passes over the tail roller by a wash-off spray. The undersize passes into the hopper between the two rollers. The machine is made duplex, there

being two traveling screens to each. This provides a means of repairing either screen without stopping the feed, the whole of the pulp being run on one screen while the other is repaired. It may also be obtained with a single screen when the machine is supplied in such form that the other screen may be added later. The speed is variable by means of cone pulleys, and the screen travels from 15 to 125 feet per minute. The claim is made by the designer of this screen that the screening is greatly assisted by a preliminary separation of the various

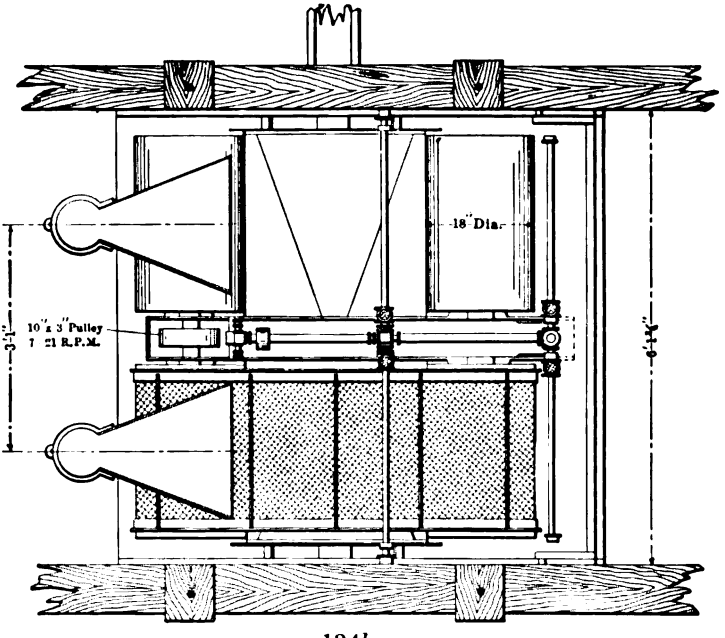

FIG. 134*b*. — PLAN.

sized particles as they leave the lip of the feed sole. Since the larger, heavier particles are thrown farther than the smaller undersize particles, and since the screen is moving in the direction taken by the ore as it comes to the screen, the oversize cannot get beneath the undersize and there is no blinding of the screen. The screen is not submerged under water. Callow spent considerable time endeavoring to make the belt operate submerged; but found that the heavier grains would settle on the screen and prevent the finer from going through it.

This screen makes a clean separation, the oversize carrying from 5 to 13% of fines. The absence of vibration is much in its favor. The only repair charges are the cost of new screens.

The approximate capacity of the Callow Duplex Screen where the feed is 50% oversize is as given in Table 66.

TABLE 66. — CAPACITIES OF CALLOW SCREEN.

20 mesh	250	tons	feed	in	24 hours.
30 "	200	"	"	"	"
40 "	150	"	"	"	"
60 "	125	"	"	"	"
80 "	100	"	"	"	"
100 "	75	"	"	"	"
150 "	50	"	"	"	"

The duplex screen weighs 1,850 pounds. New screens cost $25 for meshes between 22 and 80. The water in the feed may be as low as 3 parts water to 1 part ore, and may be as high as 1,000 gallons per minute when screening on 30 mesh with the two screens; but it should not exceed 120 gallons per minute when a 20 or 30-mesh product is treated on 80-mesh cloth. In installations where this screen is employed to do all the classification below 2½ millimeters, an unwatering tank is placed at the head of each series of screens.

Each screen will treat from 2,500 to 5,000 tons of ore, which makes the cost of screening from ½ to 1 cent per ton. A 60-mesh screen effects practically the separation usually expected of an 80 mesh, and an 80 mesh that of 100 mesh. This machine is giving satisfaction and has been installed in a great many mills, for sizing the feed of tables and vanners, and in some cases of jigs.

C. D. Demond says that on Cœur d'Alene ore an 80-mesh screen on a duplex machine lasted to treat 3,500 tons of material through 16 mesh, handling 100 tons per 24 hours and making 50% oversize. He thinks that 40-mesh duplex screen will treat 200 tons per 24 hours of material through 2½ millimeters. The capacity is increased by increased velocity of the belt. A thin layer of ore on the belt gives the best results.

Classifying by Settling in Water.

Classifying is the separation of ore particles into classes by reason of differences that exist in their rate of settling in water. If one drops a pebble into a stream of running water it finds its way quickly to the bottom. If, on the other hand, a grain of sand be dropped into the same stream it may be carried for some distance before it finds its way to the bottom. If we should drop a mass of grains of various sizes into this same stream we should find that when all had finally settled the coarsest grains would be near the point where the grains entered the water and the finest grains at a point more or less remote. This phenomenon may be observed in nature. In the bed of a mountain torrent we find only boulders and the coarsest pebbles. When the stream reaches the valley and widens out the current becomes less swift and we find the character of the sediments changing and finer material being deposited until at last where the stream empties into a lake or the ocean and its current is checked, the finest is deposited. In this case a natural classification of the material eroded from the surface of the earth has been effected. This same principle may be utilized to effect a classification of crushed ore particles but it requires modification to enable us to regulate the action, to collect the several classes, and to confine the action to a limited space. The devices that are used in the mills are known as classifiers.

§ 308. Classifiers. Definition and Classification. — Classifiers are devices for subjecting sands or slimes to the action of water, either to obtain a series of products diminishing in size, preparatory to subsequent treatment, or to settle the whole material as completely as possible from the water.

They all have a carrying current, by which is meant a current of water which carries forward whatever grains may remain suspended in it. Some of them have also rising hydraulic, or clear water currents added from below. According to the purpose to be served, the design of the apparatus and the mode of employing the above currents, these appliances may be classed as follows:

A. Classifiers using rising currents of clear water.

1. Treating sand under free-settling conditions.
   (*a*) Trough or shallow-pocket classifiers.
   (*b*) Deep-pocket classifiers.
   (*c*) Tubular classifiers.

2. Treating sand under hindered-settling conditions.
   (*a*) Trough or shallow-pocket classifiers.
   (*b*) Deep-pocket classifiers.
   (*c*) Tubular classifiers.

B. Classifiers not using rising currents of clear water.
1. Pulp thickeners.
   (*a*) Surface-current box classifiers having carrying current horizontal or nearly so.
   (*b*) Whole-current box classifiers having carrying current horizontal or nearly so.
   (*c*) Ascending-current cones or cylinders having carrying current vertical or nearly so.
2. Clarifying devices.
   (*a*) Clarifying tanks.
   (*b*) Clarifying reservoirs.
3. Distributing devices.
   (*a*) Distributing boxes.
   (*b*) Distributing or sizing launders.
   (*c*) Mechanical distributors.

CLASSIFIERS USING RISING CURRENTS OF CLEAR WATER.

§ 309. PRINCIPLES OF ACTION. — A hydraulic classifier for dividing and grading sands is generally provided primarily with a series of sorting columns or vertical openings, up through each of which a current of clear water is rising, and down through each of which a product of sand is settling. By having these rising water currents graded from fast in the first sorting column to slow in the second, we obtain a series of spigot products ranging from heavy in the first to light in the last spigot. The very finest particles, usually spoken of as slimes, overflow. To accomplish the above work each sorting column needs a feed sole for bringing in the feed (sand and water), and for doing a certain preliminary classification called launder classifying; *i.e.*, the heavier grains settle in the under part of the stream of pulp while the lighter particles are forced up. Next there is needed a pocket with ascending water current for doing the roughing work of lifting out the bulk of the lighter material, a sorting column in which the cleaning out of the lighter part is finished, and a pressure box for furnishing rising water for the sorting column and discharge water for the spigot. This pressure box forms a sort of gateway in most classifiers to stop and turn back the grains that are too light to pass down and out of the spigot. The work on the feed sole is done wholly by the feed water. The work in the pocket is done by the feed water and rising water combined. The work in the sorting column is done by the rising water alone.

Not only does the classifier separate the larger grains of the earlier spigot from the smaller grains of the later, but it establishes relations between two minerals of different specific gravity depending on and amenable to the following principles: (1) Of two grains of the same mineral, of like form, the larger settles the faster; (2) of two grains of like form and size but different specific gravity, that with the higher specific gravity will settle the faster; and (3) of two grains of like form but different specific gravity, but which settle at the same rate, the one with the higher specific gravity is always smaller than the one with the lower specific gravity.

A trough or shallow-pocket classifier is one in which the pockets are so small that they may be ignored in the computations or other provisions for working, the sorting column being the only part that needs to be made to meassure.

A deep-pocket classifier is one in which the pocket is so large that one must

either compute for velocity and try to have the water quantity closely up to the computed amount or one must provide a plunging stream of water to break up banks and remove those grains that are too light to go down and too heavy to be lifted by the average current.

A tubular classifier is one in which the pocket treatment takes place in a tube or passageway having a nearly constant area of cross-section. In a tubular classifier the current rises vertically or in a steeply sloping direction.

§ 310. THE TROUGH OR SHALLOW-POCKET, FREE-SETTLING CLASSIFIERS. — These have a nearly horizontal carrying current which is retarded momentarily over any given sorting column just long enough to allow the proper sands to drop out, and then is passed on to the next. In order to get this moment of retardation, shallow pockets built in the bottom of the trough, may be used, or small dams or riffles may be placed just beyond the sorting columns, or a combination of deflectors over, and dams beyond the sorting columns, or finally, the classifier may be set so nearly horizontal that a layer of sand collects upon the bottom in which shallow pockets form over the sorting columns.

These are adapted for the classification of coarser sizes of sands. They all have more or less the quality of allowing any one spigot to be plugged a few minutes, for example while a jig is being skimmed. In this case the product which should issue from the plugged spigot is carried on to the next without causing the mill work to suffer serious derangement. The Evans classifier is a good example of this type.

§ 311. THE EVANS CLASSIFIER. — The classifier shown in Figs. 135*a*–135*c* is 15 feet 11 inches long with flaring sides. At the head end it is 13 inches wide at the top, 9 inches at the bottom, and 16 inches deep; at the tail end, 16¼ inches wide at the top, 13 inches at the bottom, and 13 inches deep. The slope is 1° 20′, or about ¼ inch (0.258 exactly) per foot. For the sorting columns it has four round holes *A*, 4 inches in diameter, and standing vertically in these holes are the hydraulic pipes *B*, bringing the water from above. Upon these pipes are sleeves *C*, held at the desired height by thumb screws *D*, and at the bottom of the sleeves are circular horizontal discs *E*, 4¼ inches in diameter. By elevating or depressing these discs the area of the annular opening which forms the sorting column can be varied at will. The quantity of hydraulic water also can be varied by a valve *F*. Beneath each hole is a pressure box *G*, of cylindrical shape, 4 inches in diameter and 9½ inches deep. In the side of each pressure box, 3¾ inches above the bottom, is a round hole *H*, 1½ inches in diameter for the spigot plug. At distances of 6, 7, 8, and 16 inches respectively, beyond the center of each sorting column are cross dams *K* 4, 5, 6, and 10 inches high respectively. There is also a cross dam *L*, 3 inches high, 8½ inches before the first sorting column, which makes a dead box to deliver the feed quietly. The sand running through this trough fills all the spaces up to the level of the tops of the dams with permanent solid banks leaving basin-shaped pockets around each hole in which the separation takes place. The slope may be varied either by tilting the whole classifier or by altering the height of the dams so as to increase or decrease the slope as desired.

Let us study a minute the Evans classifier, in most respects a simple and well-designed device. Here advantage is taken of launder classification, there is simplicity of action, ease of adjustment, and small loss of mill head. These advantages are, however, gained at the expense of a very short sorting column. (See Fig. 136.) The carrying current *A*, with the heaviest feed grains, opposes the sorting current *C*, and in so doing forces small grains, which belong in the overflow, into the spigot; and on the other hand, the leaving current *B* sucks out and increases the velocity of the sorting current *D*, carrying into the overflow grains which belong in the spigot. Both of these adverse tendencies cut

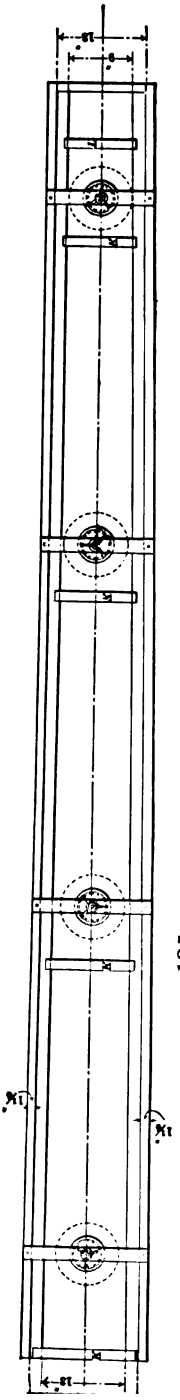

FIG. 135a. — PLAN OF EVANS HYDRAULIC CLASSIFIER.

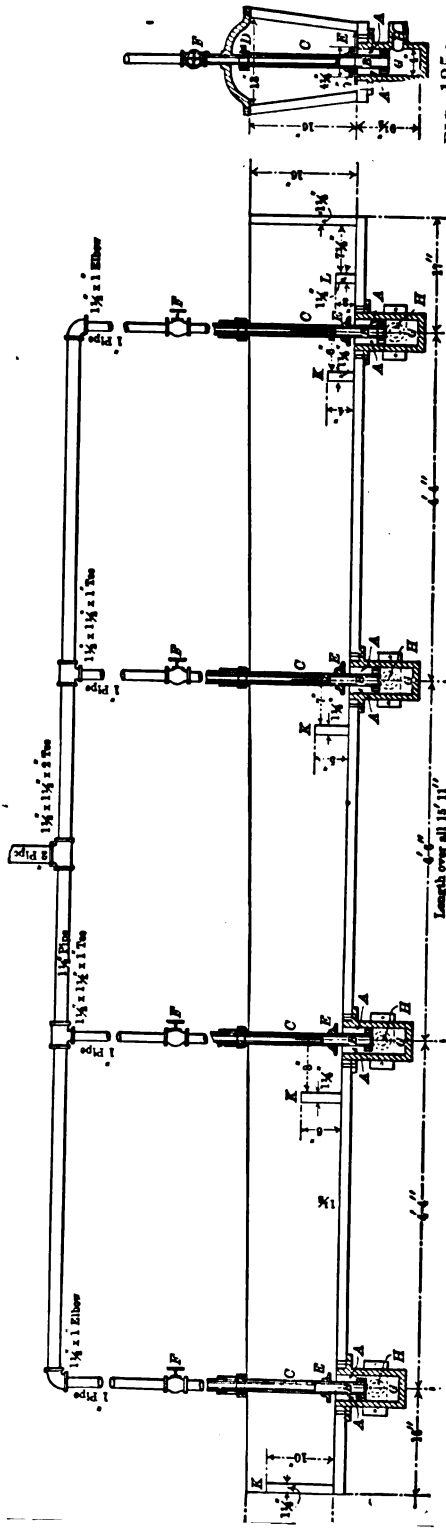

FIG. 135b. — LONGITUDINAL SECTION.

FIG. 135c. — CROSS-SECTION.

down the efficiency of the classifier. In other words, all short-column classifiers will have, owing to the heavy load on the up-stream side, fines in the spigot

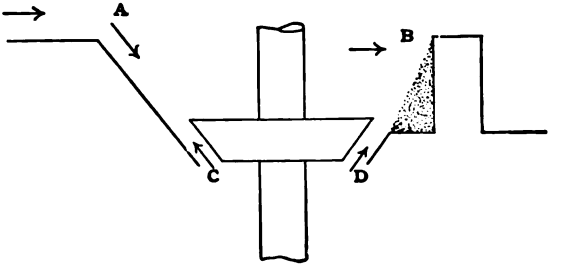

FIG. 136. — SORTING COLUMN OF EVANS CLASSIFIER.

product, and, because of the excess upward velocity on the down-stream side, coarse particles in the overflow which belong in the spigot.

Table 67 gives a sizing test of the spigots and overflow products of an Evans classifier.

TABLE 67. — SIZING TEST SHOWING WORK OF EVANS CLASSIFIER.

Through.	No. 1 Hydraulic Classifier.									
	1st Spigot.		2d Spigot.		3d Spigot.		4th Spigot.		Overflow.	
	Percent.	Cumulative. Percent.	Percent.	Cumulative. Percent.	Percent.	Cumulative. Percent.	Percent.	Cumulative. Percent.	Percent.	Cumulative. Percent.
3.94 on 2.69 mm.	0.2	0.2	0.05	0.05						
2.69 on 1.89 mm.	6.4	6.6	1.9	1.95	0.4	0.4	0.04	0.04		
1.89 on 1.49 mm.	11.9	18.5	4.7	6.65	1.4	1.8	0.3	0.3		
1.49 on 0.945 mm.	26.3	44.8	16.4	23.05	7.2	9.0	2.1	2.4		
0.945 on 0.667 mm.	21.0	65.8	18.7	41.75	13.0	22.0	5.8	8.2		
0.667 on 0.493 mm.	17.1	82.9	21.3	63.05	22.4	44.4	14.8	23.0		
0.493 on 0.371 mm.	3.9	86.8	4.5	67.55	5.0	49.4	6.0	29.0	0.2	0.2
0.371 on 0.270 mm.	5.7	92.5	11.8	79.35	15.8	65.2	18.0	47.0	0.3	0.5
0.270 on 0.158 mm.	5.5	98.0	14.6	93.95	23.8	89.0	33.0	80.0	4.7	5.2
0.158 on 0.119 mm.	0.8	98.8	3.4	97.35	5.2	94.2	10.9	90.9	4.9	10.1
0.119 on 0.073 mm.	0.5	99.3	1.8	99.15	4.6	98.8	7.4	98.3	15.8	25.9
0.073 on 0.069 mm.	0.02	99.3	0.08	99.23	0.2	99.0	0.5	98.8	2.3	28.2
0.069 on 0.047 mm.									12.9	41.1
0.047 on 0.034 mm.									9.4	50.5
0.034 on 0.025 mm.	0.2	.....	0.4	.....	0.8	.....	1.2	.....	6.6	57.1
0.025 on 0.019 mm.									8.6	65.7
0.019 on 0.012 mm.									8.7	74.4
0.012 mm.									25.4	.....
Total	99.52	.....	99.63	.....	99.8	.....	100.04	.....	99.8	.....

The capacity of a classifier of this size would probably be about 70 tons per 24 hours.

§ 312. DEEP-POCKET FREE-SETTLING CLASSIFIERS. — A good share of the hydraulic classifiers in use in the mills to-day come under this heading. For the purpose of giving the student an insight into the method of computing and designing a classifier the author has selected for description his deep-pocket vortex classifier.

§ 313. THE RICHARDS' DEEP-POCKET HYDRAULIC CLASSIFIER, designed by the author, consists of a rectangular trough *e* (see Figs. 137*a*–137*c*), with pockets *b* in the bottom and adjustable gates *c*, dipping into them to check the heavier grains over each sorting column *d* in series. The sorting columns consist of vertical iron pipes *d*, of a height sufficient for clean work — about three times

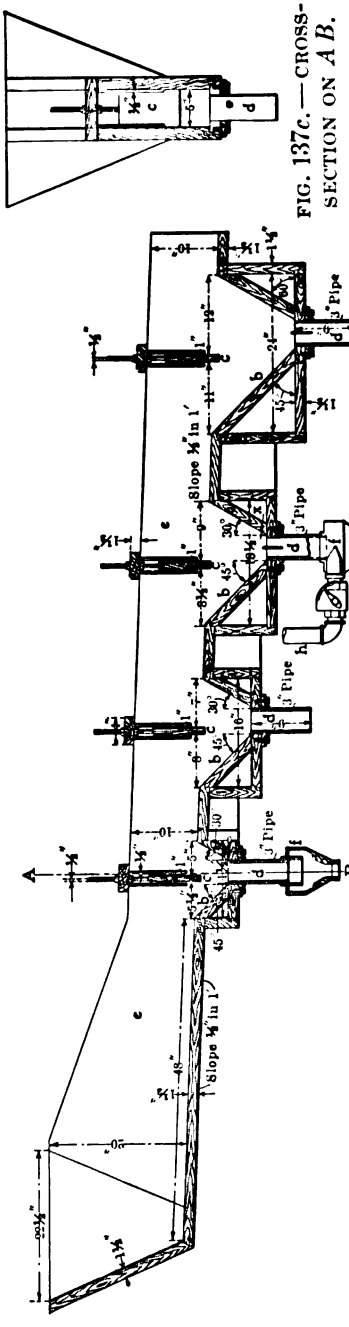

FIG. 137*a*. — RICHARDS' DEEP-POCKET HYDRAULIC CLASSIFIER.

FIG. 137*c*. — CROSS-SECTION ON *A B*.

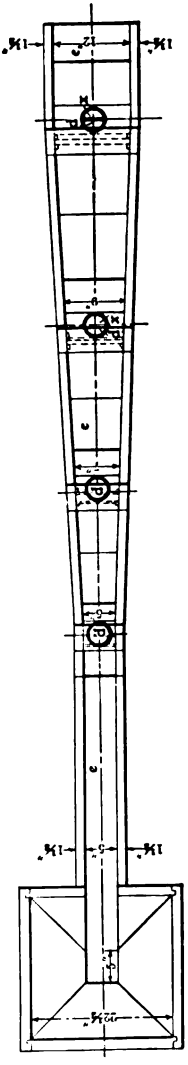

FIG. 137*b*. — PLAN.

their diameter. Screwed to these pipes are vortex fittings *f*, giving a whirling motion to the hydraulic water admitted at *h*, and pipe and plug spigots *g*, to discharge the products. These hydraulic appliances, shown in section in Figs. 137*d* and 137*e*, require fins *w* and *x* to arrest the whirling motion below the vortex *f*, and at the top of the pipes *d*, respectively. The top fins *x* are needed only when sorting fine grains.

The sorting columns *d*, are furnished with rotation to give helical paths to the ascending water currents, which abolish any tendency toward downward currents at one side, carrying light grains into the spigot product or strong upward currents on the other side, lifting over grains which should be allowed to settle. If any difficulty is found from too light grains descending in the idle center of *d*, the difficulty is overcome by suspending a core in this space. Other-

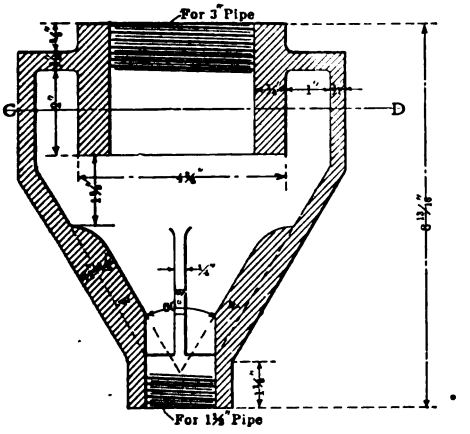

FIG. 137*d*. — VERTICAL SECTION OF VORTEX.

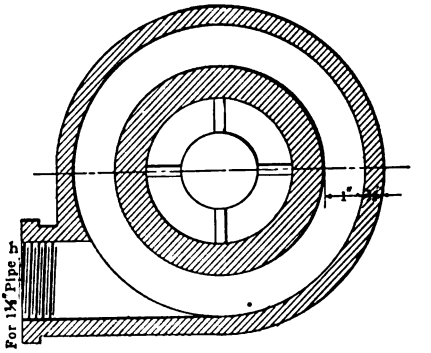

FIG. 137*e*. — CROSS-SECTION ON *C D*.

wise the core is not used. The diameter of the sorting column must be large enough to let the grains, destined for the spigot, pass down without having too large a percentage of sand over water in the column at any given time.

In designing this classifier the author makes the computations under what he considers to be ideal conditions. The mill man, in using the classifier, will, of his own volition, approximate the computed conditions, since he will seek to grade the sands in the several spigot products by the eye, according to the sizes computed; and to get these he will use approximately the computed amounts of water.

Let us assume that we have to treat 100 tons per 24 hours of grains from 2.5 to 0 millimeters, that the classifier is to have 4 pockets, that the overflow is to consist of 0.25 to 0-millimeter grains, and that the material has been crushed by rolls. Under these conditions Table 68 (see page 226) will give approximately the dimensions, requirements, and delivery of such a classifier.

We find by a sizing test that 10 tons per 24 hours are in the 0.25 to 0-millimeter product, which we consider is satisfactory for our overflow product.

From the sizing test and plotting, moreover, we may obtain a cumulative curve of the sand that is to be classified, and can then lay off on the curve the spigot products and overflow, getting the tons per 24 hours and the sizes of grains for each spigot. Of the three cumulative curves of Fig. 138, the convex is that obtained by rolls, the concave is that produced by stamps, and the straight line is a compromise which the writer has used with good

TABLE 68. — TABLE ILLUSTRATING COMPUTATION OF RICHARDS' POCKET VORTEX CLASSIFIER.

	Feed.	1 Spigot.	2 Spigot.	3 Spigot.	4 Spigot.	Overflow.
1. Tons sand, 24 hours	100	30	25	20	15	10
2. Sand sizes, millimeters	2.5–0	2.50–1.75	1.75–1.15	1.15–0.625	0.625–0.25	0.25–0
3. Kilograms minute, sand	63.1	18.9	15.8	12.6	9.5	6.3
4. Rising currents, millimeters, second	.....	139	103	67	30	.....
5. " " " minute	.....	8,340	6,180	4,020	1,800	.....
6. Liters sand, minute	23.9	7.15	5.98	4.78	3.60	2.39
7. Water, liters, minute	252.40	21.45	17.94	14.34	10.80	316.93
8. Total water and sand liters, minute	276.3	28.60	23.92	19.12	14.40	319.32
9. Area, section sorting column, square millimeters	.....	3,410	3,871	4,755	8,000	.....
10. Size of pipe (theoretical)	.....	$2\frac{5}{8}$	$2\frac{3}{4}$	$3\frac{1}{8}$	4	.....
11. " " " (practical)	.....	3	3	4	4	.....
12. Carrying current, ore and water, liters, minute	.....	290.60	302.56	312.12	319.32	.....
13. Pocket, square millimeters area	.....	34,600	48,950	77,640	177,400	.....
14. " " inches area	.....	53.6	75.89	120.37	275.00	.....
15. " side of square in inches	.....	7.32	8.7	10.97	16.6	.....
16. The heights acting on spigots, feet	.....	2.2	2.4	2.6	2.8	.....
17. Velocity, millimeter, second, due to height	.....	3,627	3,779	3,932	4,084	.....
18. Velocity, millimeter, minute, due to heigh	.....	217,620	226,740	235,920	245,040	.....
19. Spigots, diameter inches	.....	$\frac{1}{2}$	$\frac{1}{2}$	$\frac{3}{4}$	$\frac{3}{4}$	.....
20. Area, square millimeters of spigots	.....	127	127	71	71	.....
21. Liters water and sand, minute	.....	27.638	28.796	16.750	17.398	.....
22. Liters water, minute	.....	20.49	22.81	11.97	13.79	.....
23. Gallons " "	.....	5.413	6.026	3.162	3.643	83.730

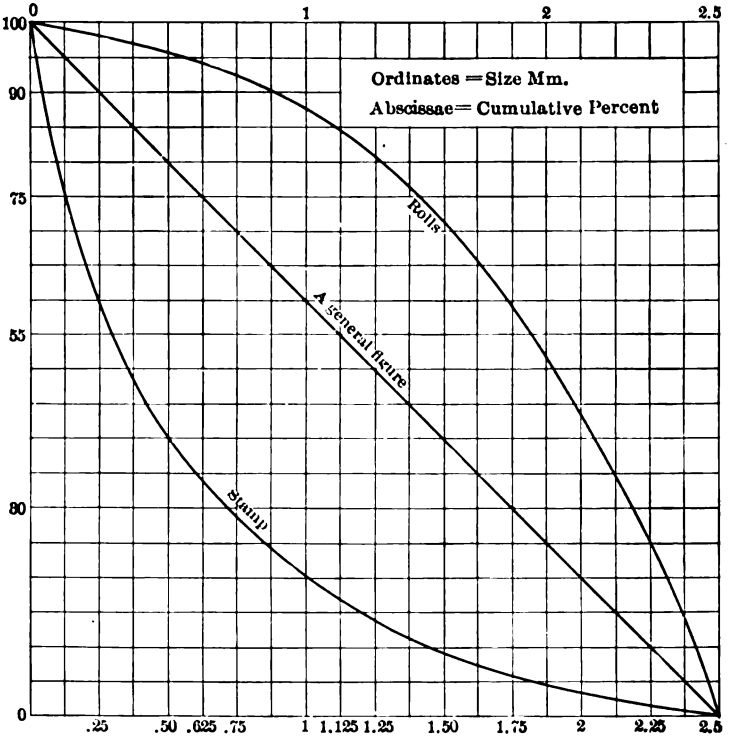

FIG. 138. — CUMULATIVE CURVES FOR ROLL-CRUSHED AND STAMP-CRUSHED MATERIAL, ALSO COMPROMISE CURVE.

results when designing classifiers. The adaptability of a classifier is so great that when the straight line is used the classifier so designed can be used for either pulp from stamps, or from rolls. The only variation from the calculated result is that when treating pulp from rolls, the coarser spigots will have more.

In computing the classifier, it will be seen that there are three variables to be considered, namely: the sizes of grains, the rising currents, and the tonnage. One can assume either one, and calculate the other two. For determining the number of tons in each spigot product, the geometrical progression is very attractive and is theoretically the best. It, however, does not satisfy the practical demands of the mill man because it gives him a deficit of feed on the fine tables and an excess on the coarse tables. On the other hand, if the same load was given on all tables, this would virtually overload the tables treating finer products and underload the tables treating the coarser products. For these reasons the writer is inclined to the view that since the arithmetical progression gives a series between the geometrical progression and the equal weight plan, it is the best plan to adopt. In regard to geometrical progression it may be said that where the smallest term is more than half the average of all the terms, the weights it gives are not extreme and would satisfy the mill man. In such cases, it should be used.

If, then, we are making our computations on the 100-ton basis and the overflow is 10% of the material fed, we may figure the quantities in the various spigot products as follows: Starting with the overflow as 10 tons, we add 5 tons to the overflow to obtain the fourth spigot; and so on, adding 5 tons to the fourth spigot to get the third, 5 tons to the third to get the second, and 5 tons to the second to get the first.

The computations involved in Table 68 will now be explained line by line.

Line (1) Tons per 24 hours are assumed. Line (2) 2.5 to 0-millimeter feed and 0.25 to 0-millimeter overflow are assumed. To get the average sizes of grains in the other products we have 10 + 15 = 25 tons; 100:25 = 2.5 mm.: 0.625 mm.; 10 + 15 + 20 = 45; 100:45 = 2.5 mm.: 1.15 mm.; 10 + 15 + 20 + 25 = 70; 100:70 = 2.5 mm.: 1.75 mm. Line (3) Kilograms per minute are computed from tons per 24 hours by multiplying by 0.631; thus 30 tons times 0.631 = 18.93 kilos per minute. We discard the 3 as too small to save and have 18.9. Line (4) The currents in millimeters per second are taken direct from Table 157. We only consider the velocities of the quartz or gangue, the heavy mineral takes care of itself. Line (5) is obtained by multiplying line (4) by 60 to convert seconds into minutes. Line (6) Liters of sand are obtained by assuming the ore to be wholly quartz and then dividing the kilograms of line (3) by 2.64, the specific gravity of quartz. This gives the liters of sand. The error due to assumption is all upon the safe side. Line (7) Water liters per minute. We assume that the feed will have 4 times as much water as ore by weight, and that the rising water for any given sorting column will be 3 volumes of water to 1 volume of sand. We therefore multiply the liters sand per minute by 3 and get the liters of rising water per minute for each sorting column. Line (8) Total liters is obtained by adding line (6) to line (7). Line (9) Area in square millimeters needed in the section of the sorting column is obtained by dividing line (8) by line (5) and multiplying by 1,000,000. Line (10) The exact diameter of cylinder that will have the area given in line (9) is found from Table 156. These sizes give the velocities and quantities for the treatment. Line (11) gives the commercial size of pipe corresponding to the cylinders of line (10), allowing a little increase in diameter for friction. Line (12) gives the carrying currents rising in the pockets. They are computed from lines (6), (7), (8). For the first we add 276.3 to 21.45 and subtract 7.15, giving 290.60; for the second we add 290.60 to 17.94 and subtract 5.98, giving 302.56;

and so on for the third, fourth, and overflow. This is liters rising. Line (13) To get the area of pockets in which line (12) liters are to rise at desired velocity, we divide line (12) by line (5), getting square millimeter area. Line (14) Transform square millimeters of line (13) to square inches of line (14) by dividing the former by 645. This gives square inches area of pockets. Line (15) Extract the square roots of line (14) and we have the length and width of the pockets. The numbers adopted, $7\frac{1}{2}$, $8\frac{3}{4}$, 11, and $16\frac{3}{4}$, are in simple fractions to aid the carpenter work. These pockets will give the desired rising currents. Line (16) gives approximate heights or columns of water that are acting to force water out of the spigots. These values are dependent upon the depth of water on the spigot orifice. Line (17) gives velocity in millimeters per second of body falling freely in vacuum due to those heights. Line (18) Velocity in millimeters per minute obtained by multiplying line (17) by 60. Line (19) gives sizes of spigots assumed. Line (20) gives areas of section of spigot orifices, from Table 156. Line (21) gives liters of water and sand per minute from spigots obtained by multiplying line (20) by line (18), and dividing by 1,000,000. Line (22) gives liters of water per minute obtained by subtracting line (6) from line (21). Line (23) Gallons water per minute from the spigots obtained by multiplying line (22) by 0.26419. In the case of the overflow it is line (7) that is multiplied.

These final values of the gallons from the spigots are undoubtedly too high, as no figures exist which follow for friction. The right figure may be $\frac{3}{4}$ or $\frac{2}{3}$ of the figures arrived at above. The dimensions shown on Figs. 137*a* and *b* do not apply to the case in hand.

This classifier has the advantage that it can be built of any number of pockets, which may be built together or spaced at distances from one another to suit the mill design. The helical rising currents destroy local adverse currents.

This classifier is extremely simple and at the same time systematic. The column and the pocket have the same rising current. There can be then no harmful accumulation of sand. When the spigot is pulled out one can see down straight through all the working parts for the removal of any obstruction.

The first two spigots can go to jigs, the last two to Wilfley tables, the overflow to Callow water cones and thence to vanners.

Table 69 gives a sizing test of the feed to and products from a 3-spigot Richards' deep-pocket free-settling classifier treating material that has been crushed by rolls through a 1-mm. screen. The average grain of the first spigot is 0.566 mm., of the second about 0.351 mm., of the third about 0.137 mm., and the overflow is mostly finer than 0.107 mm. Twenty-six and one-tenth percent. of the amount fed was recovered in the first spigot; 40.29% in the second; 17.29% in the third; and 16.09% goes into the overflow.

TABLE 69. — SIZING TEST OF FEED AND PRODUCTS FROM RICHARDS' DEEP-POCKET FREE-SETTLING CLASSIFIER.

Size mm.		Feed. Percent.	1st Spigot. Percent.	2d Spigot. Percent.	3d Spigot. Percent.	Overflow. Percent.
Through.	On.					
.....	0.907	0.41	0.0	1.49	0.0	0.0
0.907	0.566	20.55	52.05	17.90	0.40	0.12
0.566	0.427	14.84	24.62	19.90	1.50	0.31
0.427	0.351	12.39	14.30	23.60	3.70	0.43
0.351	0.277	9.87	5.22	18.19	6.90	0 81
0 277	0.206	9.05	2.61	9.60	12.09	0.43
0.206	0 137	10.03	1.00	8.20	29.50	3.67
0.137	0.130	3.59	.....	0.79	8.21	0.62
0.130	0.107	4.08	0.38	1.81	37.75	0.31
0.107	.....	15.25	.....	.....	.....	93.50
Total		100.06	100.18	100.48	100.05	100.20

§ 314. TUBULAR FREE-SETTLING CLASSIFIERS. THE DOUBLE-CONE HYDRAULIC CLASSIFIER. — A double-cone classifier such as is often used in the mills is shown in Fig. 139. The pulp is delivered to the top of the inner cone of the classifier and passes down and out the opening *M*, where it encounters a rising current of water which enters through the dial cock *E*. The water passes through the chamber *K* and up through the annular space *C*. The water is so adjusted that a head is maintained in the inner cone above the level of the overflow. The fines pass upward and overflow into the peripheral launder and thence by spout *D* to the settling tanks. The heavy portion of the pulp falls into space *K*, where it is drawn off through the opening *H*.

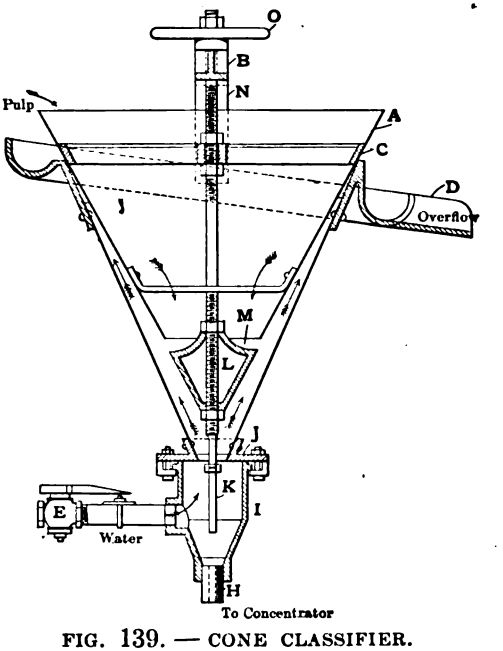

FIG. 139. — CONE CLASSIFIER.

Regulation is secured by raising or lowering the inner cone *A*, as well as the valve *L*, and by changing the water quantity by the valve *E*.

When more than two products are desired, the flow is adjusted to carry the finer sands over into the overflow. This overflow may then be treated in other classifiers of larger size. This classifier can be operated without added water being used, if the pulp carries sufficient water, and proper adjustments are made to openings *M* and *C*, so that a head is maintained in the inner cone A.

The capacity varies with the size of the classifier, size of product, and closeness of separation required. The size of the product determines the size of the classifier used, the number of cones being increased for large capacities.

The classifier is made in five sizes as shown in Table 70. It has been proved that 50-inch cones are really unnecessary and owing to the coarseness of product produced, the 12-inch cone finds small application.

TABLE 70. — SIZES, WEIGHTS, ETC., OF DOUBLE-CONE CLASSIFIERS.

Diameter in Inches of Inner Cone.	Product, Mesh.	Weight, Pounds.
12	8 to 20	275
20	20 " 30	450
30	30 " 40	500
40	40 " 60	700
50	60 and finer	1,000

§ 315. THE RICHARDS' ANNULAR VORTEX CLASSIFIER is now made in the two forms, Figs. 140 and 141. The first is for larger grains, the second is for smaller grains with a large quantity of water.

The computation of this classifier (Fig. 140) is very simple as there is only one pocket to be computed. In the first case, let us suppose we have 250 tons per 24 hours of 8 to 0-millimeter stuff, and we wish to divide on 2½ millimeters, making a spigot product from 8 to 2½ millimeters and an overflow product from

2½ to 0 millimeters. These figures refer to the quartz and our computation will be as shown in Table 71.

TABLE 71. — COMPUTATION OF RICHARDS' ANNULAR VORTEX CLASSIFIER FORM OF FIG. 140.

	Feed.	Spigot.	Overflow.
1. Tons, 24 hours	250	172	78
2. Sand sizes, millimeters	8-0	8-2½	2½-0
3. Kilograms sand, minute	157.9	108.7	49.2
4. Currents, millimeter, second	.....	172	.....
5. " " minute	.....	10,320	10,320
6. Liters sand, minute	59.8	41.2	18.6
7. Water liters, minute	631.6	123.6	755.2
8. Total water and sand, liters	691.4	164.8	773.8
9. Area, section of sorting column, square millimeters	.....	15,970	.....
10. Area of section of sorting column in standard 13–11½ inch classifier	.....	18,619	.....
11. Area of pocket, square millimeter	.....	.....	74,970
12. Area of pocket of 13–7 3-inch classifier	.....	.....	58,999

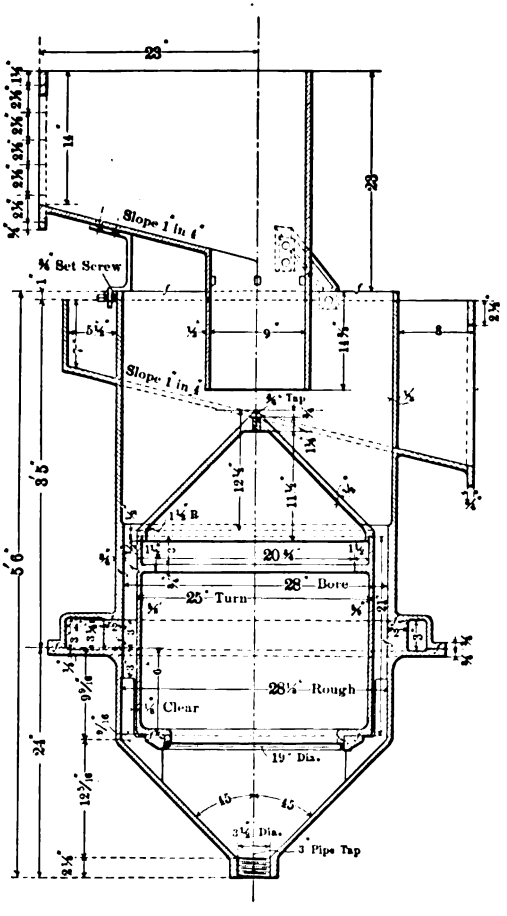

FIG. 140. — RICHARDS' ANNULAR VORTEX CLASSIFIER FOR COARSE GRAINS.

The 3-inch classifier having an annular space between circles of 13 and 11½-inch diameter, figures out a little large for its sorting column and the pocket, 13 × 7.3 inch, a little small for this, but it is probable that this classifier would separate the Hancock jig feed 8 to 2½ millimeters from ordinary classifier feed 2½ to 0 millimeters. The latter could be dewatered by Callow water cones and sent to a classifier yielding four spigot products and overflow. The first and second products would go to jigs, the third and fourth to Wilfley tables, and the overflow to Callow water cones and then to vanners.

The computation of the annular vortex classifier (Fig. 141) is much the same as the other. The chief difference between the two is in the smaller size of the ore, the smaller size of grain on which the division is made, and the larger quantity of water. Suppose that in a stamp mill the stamps are crushing 60 tons per 24 hours through 1.5 millimeters, using 7 tons of water per ton of ore, and that we wish to treat this pulp, sending 1.5 to 1-millimeter material into the spigot product and 0.1 to 0-millimeter material into the overflow. There will be something like 15 tons a day of the fine stuff. Then we have the computed results as shown in Table 72.

TABLE 72. — COMPUTATION OF ANNULAR VORTEX CLASSIFIER OF FIG. 141.

	Feed.	Spigot.	Overflow.
1. Tons, 24 hours	60	45	15
2. Sand sizes, millimeter	1.5–0	1.5–0.1	0.1–0
3. Kilograms, minute	38	28.5	9.5
4. Currents, millimeter, second	.....	6.5	.....
5. " " minute	.....	390.0	.....
6. Liters, sand, minute	14.4	10.8	3.6
7. Liters, water, "	266	32.4	298.4
8. Total liters sand and water	280.4	43.2	302
9. Area of sorting column, square millimeters	.....	110,770	774,300
10. Diameters 20 inches to 13 inches, sorting column	.....	117,051	.....
11. Diameters 41¾ inches to 14½ inches, pocket	.....	.....	776,689

The sorting column would be 20 inches outside and 13 inches inside diameter. The annular pocket would be 41¾ inches outside diameter and 14½ inches inside diameter. This sorting column would conform to the standard 20-inch size of the makers, but would have an annular space 3½ inches wide, which is wider than generally used; 38 to 35 inches for the outer and inner diameters of the annular space of sorting column would give 110,961 square millimeter area, and would have an annular sorting column only 1½ inches wide. Of the pocket dimensions, 14½ inches conforms to standard 20-inch machine, but 41¾ inches would have to be built.

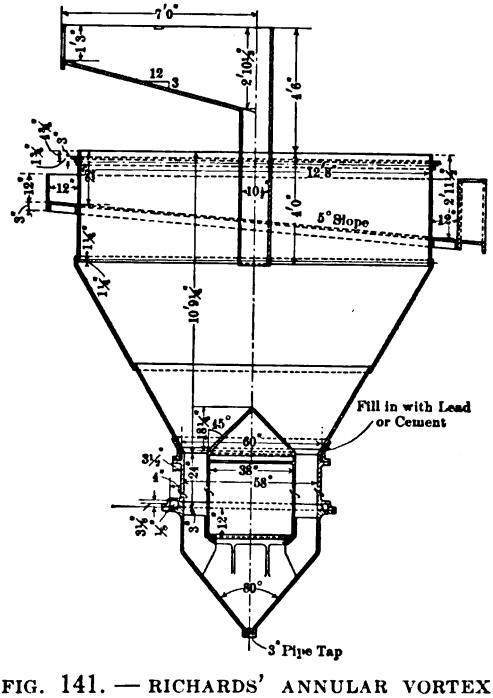

FIG. 141. — RICHARDS' ANNULAR VORTEX CLASSIFIER FOR FINE GRAINS.

This classifier could take stamp pulp and send 1½ to 0.1-millimeter stuff to percolating vats or tube mills and 0.1 to 0-millimeter stuff to agitators for cyaniding.

§ 316. HINDERED-SETTLING CLASSIFIERS. — The classifiers that we have so far studied have been free-settling classifiers, *i.e.*, the proportion of sand to water in the sorting column has been sufficiently small so that individual grains could settle freely under the action of gravity. When for any reason the proportion of sand to water becomes such that the grains are constantly colliding with one another while being held in suspension somewhat like a mass of quick-sand we have what is known as hindered settling. The exact theory of hindered settling we shall leave for the next chapter, but we may say here that the result produced by hindered settling is very different from that produced by free settling. While, for example, the ratio between the diameters of a quartz and a galena grain that are equal settling under free-settling conditions has been found to be about 3.9 to 1, the same ratio under hindered-settling conditions is about 6.9 to 1. The whole thing depends upon obtaining and maintaining a bed of quicksand in the sorting column. This may be done by a constriction in the sorting column or by a sieve up through which is rising a

pulsating current of water. But two forms of hindered-settling classifiers will be described; the Improved Wolf-Tongue and the Pulsator Classifier, both of which may be classed as deep-pocket classifiers.

§ 317. IMPROVED WOLF-TONGUE CLASSIFIER. — Figs. 142*a*, *b*, and *c*, show this classifier.

This hindered-settling classifier divides the work of classification into three parts; the work done in the pocket, the work done in the quicksand chamber, and that done in the sorting column.

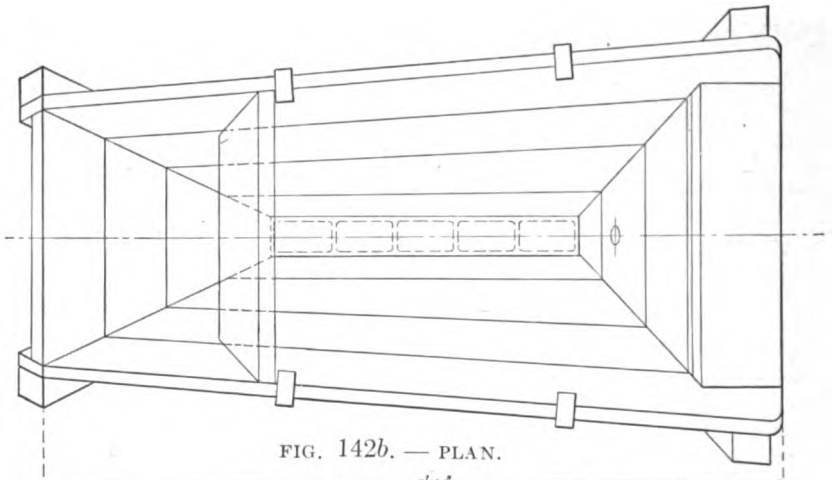

FIG. 142*b*. — PLAN.

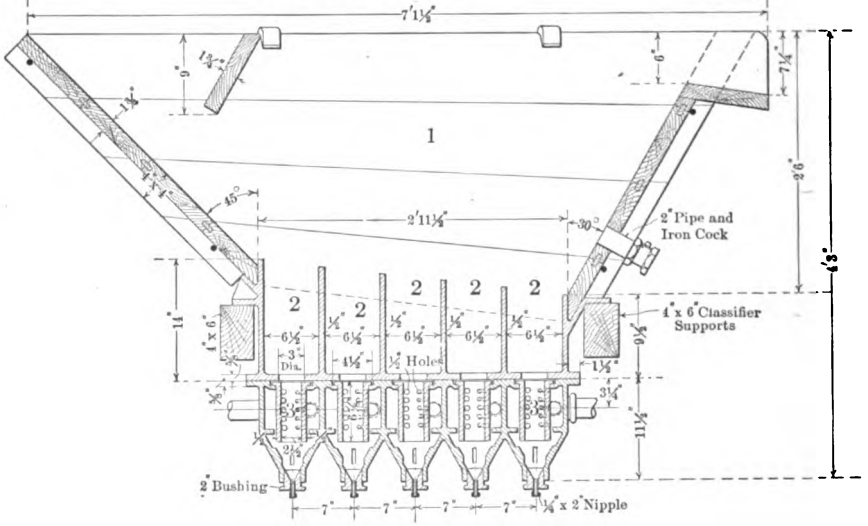

FIG. 142*a*. — LONGITUDINAL SECTION WOLF-TONGUE CLASSIFIER.

The rough work is done in the pocket (1), the fine work is mainly done in the quicksand chambers (2) where hindered-settling quicksand conditions prevail, while the sorting columns (3) below have less area of section than the last and in them the final cleaning is done. The sorting column is preferably made long vertically, and with a helical rising current obtained by admitting tangential streams of water all along the height of the column. The pressure

box in this design is placed all around the sorting column and the product is delivered beneath in the cone leading to the spigot. It sometimes happens in the fine sizes that the pulp forms a solid wall in the hindered-settling chamber. To avoid this, the jets in the walls of the sorting column are made radial.

The classifier looks somewhat complicated, but it is really not so. The castings composing it require but little machine work, the way through it is large, free, and open so that no choking or obstruction is likely to occur. It is very easily regulated and gives a beautiful set of classified products well adapted for Wilfley table and vanner work.

The computation for this classifier is exactly like that of the pocket vortex classifier, taking into account only the tank above and the sorting column below. The sorting column is figured as if it were acting by free settling.

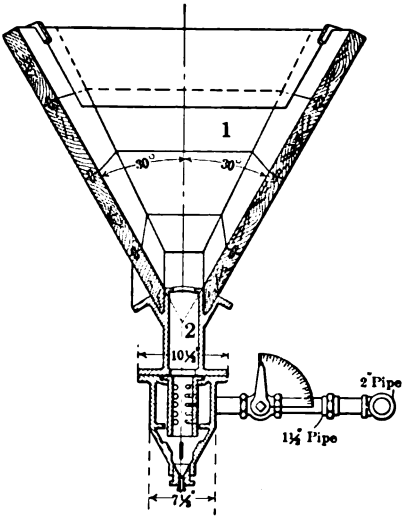

FIG. 142*c*. — CROSS-SECTION.

§ 318. RICHARDS' PULSATOR CLASSIFIER. — The Richards' Pulsator Classifier, while acting by hindered settling, differs widely from any of the devices heretofore described.

Figs. 143*a*, *b*, and *c*, show the usual inverted form of the pulsator classifier. The classifier consists of a feed hopper (0) and six treatment pockets (1), (2), (3), (4), (5), and (6). The bottom of the feed hopper and the six treatment pock-

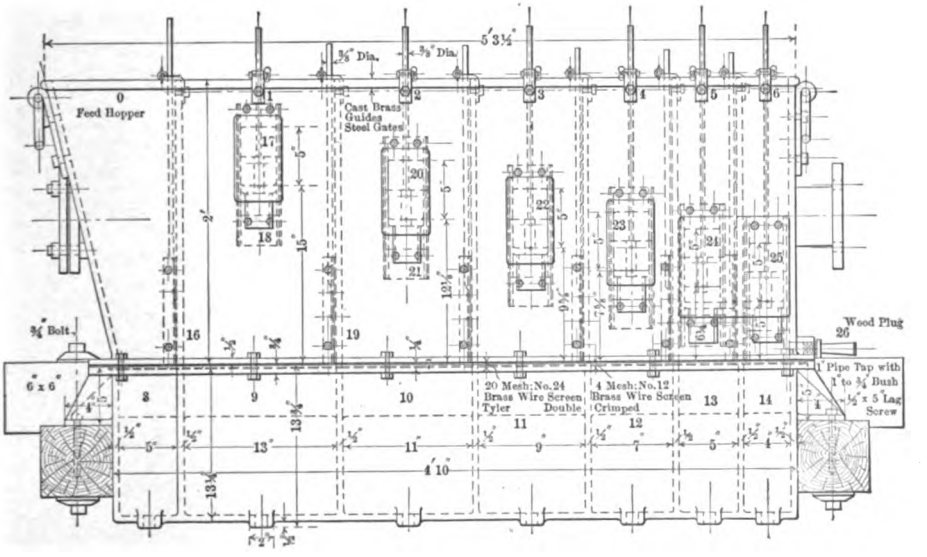

FIG. 143*a*. — SIDE ELEVATION OF RICHARDS' PULSATOR CLASSIFIER.

ets is a screen (7) of two layers, one coarse mesh for strength, the other fine for size of hole. An intermittent rising current is admitted to the hutch or pressure boxes (8), (9), (10), (11), (12), (13), and (14), through the revolving

cock (15). The ore is introduced at (0) and falls immediately to the screen level where it encounters the rising pulsating current of water. This serves to agitate the ore, get it in partial suspension, and prevent clogging of the feed

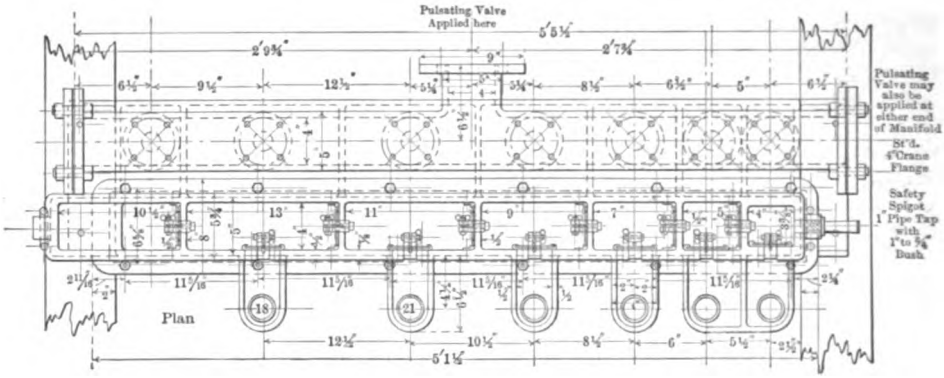
Pulsating Valve Applied here
Pulsating Valve may also be applied at either end of Manifold
St'd. 4" Crane Flange
Safety Spigot 1" Pipe Tap with 1" to ¾" Bush
Plan

FIG. 143*b*. — PLAN.

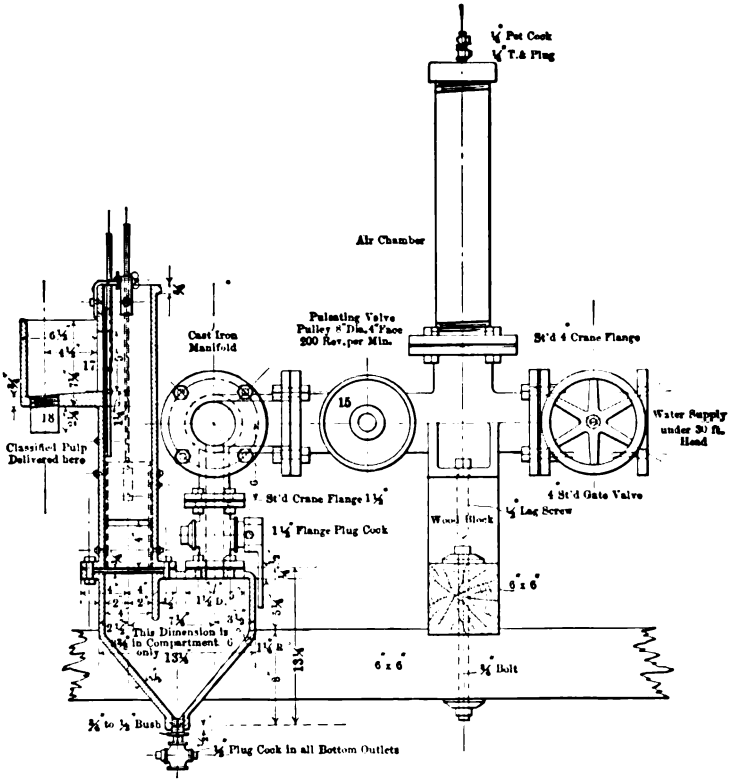
¼" Pet Cock
¼" T.& Plug
Air Chamber
Pulsating Valve Pulley 8" Dia. 4" Face 200 Rev. per Min.
St'd 4 Crane Flange
Cast Iron Manifold
Water Supply under 30 ft. Head
Classified Pulp Delivered here
St'd Crane Flange 1½"
4 St'd Gate Valve
1½" Flange Plug Cock
Wood Block
½ Lag Screw
This Dimension is ¾ in Compartment 6 only
6 x 6
¾" Bolt
¾" to ½ Bush
¾ Plug Cock in all Bottom Outlets

FIG. 143*c*. — SECTIONAL END ELEVATION.

hopper. From the feed hopper (0) the ore passes below the gate (16), where it encounters and is subject to the action of the slowly rising, pulsating current of water in (1). This current further agitates the ore and raises to the discharge

opening (17) the finest particles in the ore, whence they are discharged at (18). Through the gate (19) the ore passes from classifying compartment (1) on the screen (7) to classifying compartment (2) where it encounters a more swiftly rising, pulsating current and the next heavier grade of sands is lifted to the discharge opening (20) and discharged at (21). This process is repeated successively in pockets (3), (4), (5), and (6). In the latter compartment only the heaviest particles will have been left in the ore bed and these are discharged from (25). In cases where the ore contains particularly heavy particles which the current in the last pocket is unable to lift to the discharge (25), the plug (26) may be removed from its spigot. The discharge from this spigot may be made finished concentrates. To do this, however, requires constant attention, and it is far better to send the product directly to a jig for final cleaning up.

The openings (17), (21), (22), (23), (24), and (25), are the only discharge openings in the machine, and (17) is considerably higher than (25). Hence the water in the machine tends to flow toward (25), washing the ore along the screen (7) to the final discharge (25) or (26), as the case may be. Gates are provided for varying the height of the discharge openings within wide limits. These discharge openings may in some cases require adjustment until they are almost in a horizontal line. With heavy ores, 2.5 to 0 millimeters in size, it is customary to have (17) 15 to 16 inches above the screen (7), and (25) about 5 inches, with the other openings on the diagonal line between. When treating ores 1.5 to 1 millimeter maximum grain, not heavily charged with mineral, (25) may be 10 inches more or less, and (17) 15 inches, more or less, above the screen. By observing this adjustment, the difficulty of keeping fines out of the last discharges is greatly reduced. Properly adjusted, this classifier will discharge all the fines in the ore from the first two discharge openings, (17) and (21).

The sieve (7) serves to support the bed of ore and has no part in the classification. Particles of free mineral of sufficient size to settle against the classifying current in the first one or two compartments, but finer than the mesh of (7), may occur in the feed, in which event they will sink to the bottom of the hutch, whence they may be drawn off as rich concentrates through the spigots shown. This, however, will rarely occur and, in general, the hutch need not be drained more often than once a day. It is considered wise to prevent the formation of hutch product as much as possible.

The number of overflow or discharge openings in this classifier is six. The first and second overflow products are fines and the last overflow consists of a mixture of the heaviest ore particles in a true classified product.

This classifier is built in several sizes as shown in Table 73*a*.

TABLE 73*a*. — SIZES, CAPACITIES, ETC., RICHARDS' PULSATOR CLASSIFIER.

Type.	Size. Inches.	Number of Compartments.	Approximate Capacity in Tons per 24 Hours.*	Dimensions Approximate Only.				Diameter Pulley. Inches.
				Length. Inches.	Height. Inches.	Width. Inches.	Pulley Face. Inches.	
Direct	2	6	40	51	30	21	1½	8
Inverted	2	6	40	37	31	19	1½	8
Inverted	3	6	100	53	35	21	3	8
Inverted	4	6	175	70½	38	22¾	4	8

* With pulp at a consistency of 3 parts water to 1 of ore by volume. Ore crushed to pass 2 mm.

The advantages of the pulsator classifier are: 1. A minimum dilution of slime. The slimes are diluted with the water rising in two pockets only. 2. The intermediate and coarse overflow products possess the advantages of hindered-settling ratio and are at the same time free from fine mineral which

would contaminate the tailings of the fine concentrators. 3. The machine has low water consumption.

Fig. 144 gives a graphical representation of a sizing test made upon the feed for the pulsator and the various discharges obtained. This is summed up in Table 73*b*. By looking at Table 73*b* we shall see that while in the feed but 18% was finer than 100 mesh, the first discharge has 56% finer than 100 mesh, the second discharge 41%, but the third only 7%, the fourth 2%, the fifth but 0.5%, and the last none. This shows very nicely the character of the work done by this machine.

TABLE 73*b*. — SUMMARY OF RESULTS SHOWN IN GRAPHICAL PLOT, FIG. 144.

Sizes.	Percentages Coarser than Given Size.						
Coarser than.	Feed.	Discharge.					
		No. 1.	No. 2.	No. 3.	No. 4	No. 5.	No. 6.
1.00 millimeter	12	0	0	12	31	52	71
0.500 "	61	5	16	68	84	91	97
100 mesh	82	44	59	93	98	99.5	100

§ 319. *The Richards' Pulsator Classifier* is also made in a form known as the direct, in distinction from the inverted form just described. This classifier is made upon the same principle as the pulsator jig and is suited for low capacities, testing laboratories, etc. It is capable of quicker adjustment than is the inverted form, but dilutes the slimes with all the rising water. For a description of this type, the reader is referred to the description of the pulsator jig in a later chapter. (See also Table 73.)

CLASSIFIERS NOT USING RISING CURRENTS OF CLEAR WATER.

§ 320. GENERAL. — All of this group omit the hydraulic current and depend upon the behavior of grains of sand or slime in a carrying current of water, which, in the majority of cases, is horizontal. The faster the current moves, the further will the grains be carried. The slower, the earlier will they settle. The various forms of apparatus have been designed according to their ability to accelerate or retard the settling of the sand. They treat slimes which overflow the last of the hydraulic classifiers, and the practice in regard to the size treated is quite variable in this country. The maximum grain, as a rule, ranges from 0.02 inch (0.5 mm.) to 0.01 inch (0.25 mm.) in diameter. Linkenbach recommends 0.25 mm. as the proper size for this treatment. Their products, with a few exceptional cases, are suitable for treatment on tables and vanners.

The hydraulic is omitted from these groups for the following reason: The process has, up to this point, been adding water to the pulp at every step. It is advisable, from this point on, to distribute the pulp without further addition of water, unless the consequent sacrifice of fine slime which passes down with the spigot product and is lost in the subsequent concentration, is too great. The spigots used with the box classifiers are similar to those used in the hydraulic classifiers. They are chiefly the pipe and plug spigot and gooseneck. Of these, the latter finds more application here than with the hydraulic classifiers, owing to the great depth of these boxes and to the fact that the slimes flow more freely than the coarser sands of the former class. A most excellent device is a large screen with holes 1 mm. in diameter, to screen out the fiber from all the pulp running to box classifiers. This allows the use of small spigots and of concentrated pulp in the spigots. It will be some trouble to keep this screen clean, but the additional ore saved may much more than offset it.

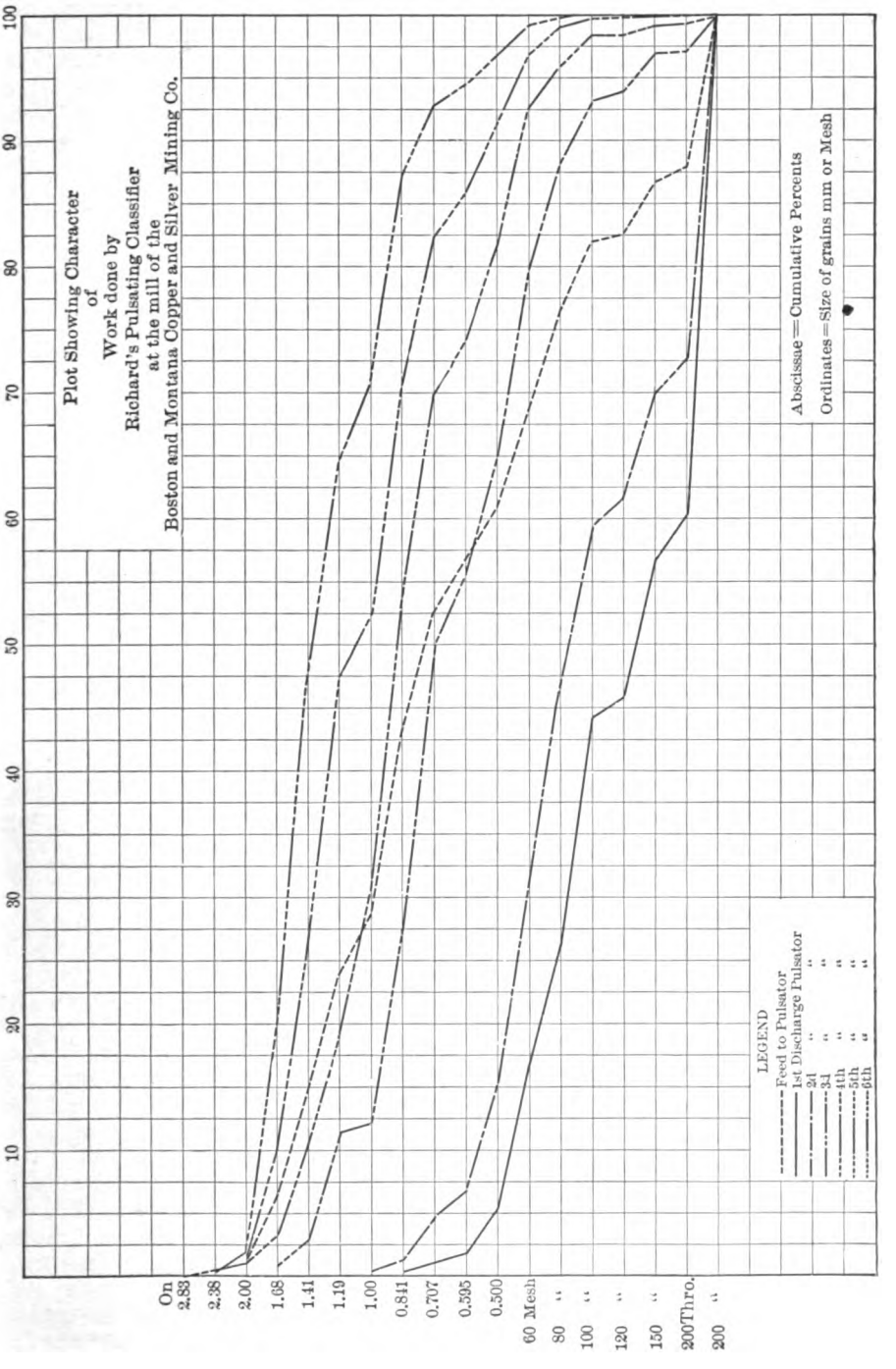

FIG. 144. — GRAPHICAL REPRESENTATION OF SIZING TEST UPON PULSATOR CLASSIFIER PRODUCTS.

The capacity of a box classifier is measured by the quantity of water, rather than by the quantity of dry slime fed to it. To do its best work, it must have the right quantity of water to establish its regular washing currents. The conditions of the hydraulic classifier are such that it will never send pulp that is too dense for treatment in a box classifier. The overflows of hydraulic classifiers probably contain less than 3%, and in some mills they will not have over 1% of solid dry slime.

There are three logical methods of supplying and using the carrying current, namely, a surface current flowing over a stagnant bottom, a whole current in which all the water is moving at a nearly uniform rate from the receiving end to the delivery end, and an ascending current usually with diminishing velocity.

§ 321. SURFACE-CURRENT BOX CLASSIFIERS. GENERAL. — This group includes Rittinger's *spitzkasten* apparatus and all the various forms of apparatus in which the sorting is done by surface current, without the hydraulic current or the plunging feed. They resemble many of the forms included under deep-pocket hydraulic classifiers, only they are made larger, and are used for treating finer products. In these classifiers there is a reason which is additional to those already given, for omitting the hydraulic water, for a positive rising current of hydraulic water cannot be used without making troublesome banks. The omission of hydraulic water causes each spigot product to be more or less contaminated with fine slimes, which properly belong in later spigots or in the final overflow.

If a horizontal current of pulp passes over the surface of a tank of stagnant water, all of the particles contained in the pulp begin to settle, and they do so according to the law of free-settling particles. Those having the greatest settling power fall out first, and those with less, later, ranging in a series from the beginning to the end of the current, according to their settling power in water. If now, we divide up the current, so that it takes place in a series of boxes, each a little wider than the previous, we can obtain from the set so arranged a series of products each of which is finer in size than the one preceding it, and the grains in these products are arranged approximately according to the law of free-settling particles, namely, the quartz, for example, in any product, will be larger in diameter than the galena. Theoretically, this horizontal current seems to be a very perfect means of sorting slimes; practically, it is capable of doing only approximate work, and it can only do this when the laws controlling it are understood.

§ 322. METHOD OF INVESTIGATION. — In order to study these laws an investigation was made by the author. This investigation required some means of coloring the liquid composing the surface current, of seeing it when it has been colored, and of picturing it for further study and comparison. Milk of lime, added to the water, was found to be the best coloring matter; a tank with one side of plate-glass permitted the colored current to be seen, and photography furnished the means of preserving its form, so that it could be studied at leisure.

The tank (see Figs. 145–148), which served for a pointed box, was 1,206 mm. long, 603 mm. deep, and 203 mm. wide (inside measures). The outlet was 60 mm. below the top of the tank. It had a plate-glass front, and was otherwise painted black inside. Within it were two adjustable cross-partitions, 431 mm. long and 203 mm. wide, usually sloping 58° from the horizontal. One, called the tail-partition, sloped downward and inward from the outlet; the other, called the head-partition, sloped downward and inward from the end of the feed sole at the inlet. Both were beveled, to give a sharp, true edge of contact. They were loaded with lead, to sink them; suspended by fine wires, to support them; and wedged in place and made practically water-tight at the

sides by tacking on a strip of gunny-sack. The feed sole, 305 mm. long by 203 mm. wide, was packed and held by the same means as the partitions. Water was brought by two hose pipes and distributed by two pipes with many holes,

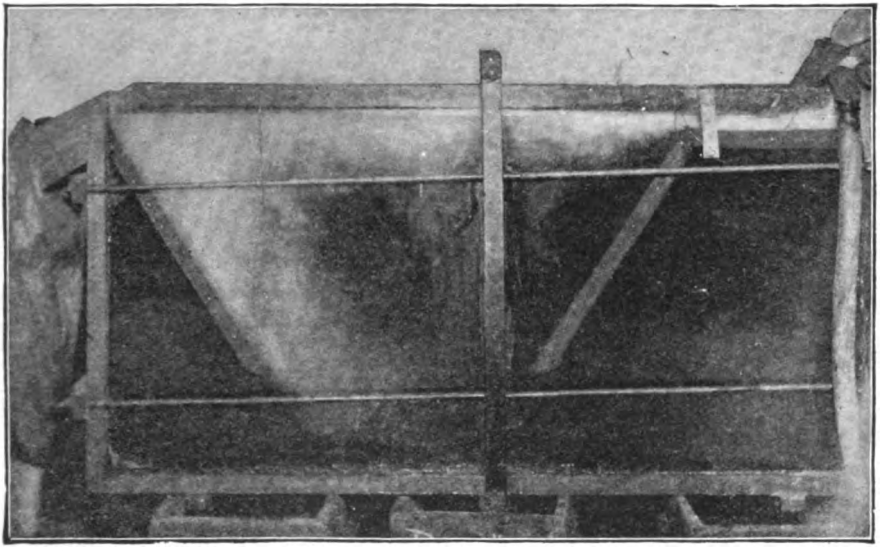

FIG. 145. — FEED HORIZONTAL AND LEVEL WITH OUTLET. CURRENT, 86.4 KILOGRAMS PER MINUTE. WEDGE ANGLE, 10°.

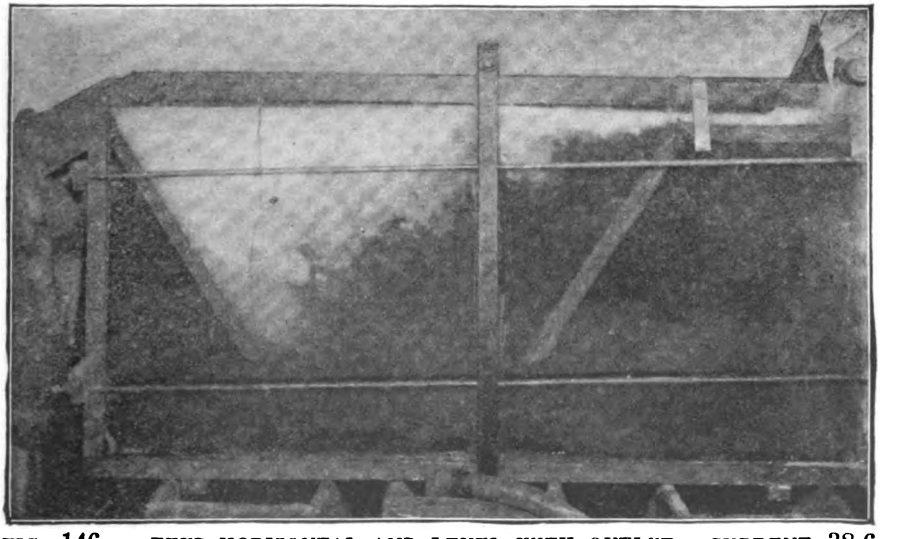

FIG. 146. — FEED HORIZONTAL AND LEVEL WITH OUTLET. CURRENT, 38.6 KILOGRAMS PER MINUTE. WEDGE ANGLE, 20°.

to give an even current. Thus made, the box classifier was like the Rittinger *spitzkasten* in every respect, except that it had no spigot to discharge water below and its sides were vertical (which, indeed, is the case also in some of Rittinger's boxes).

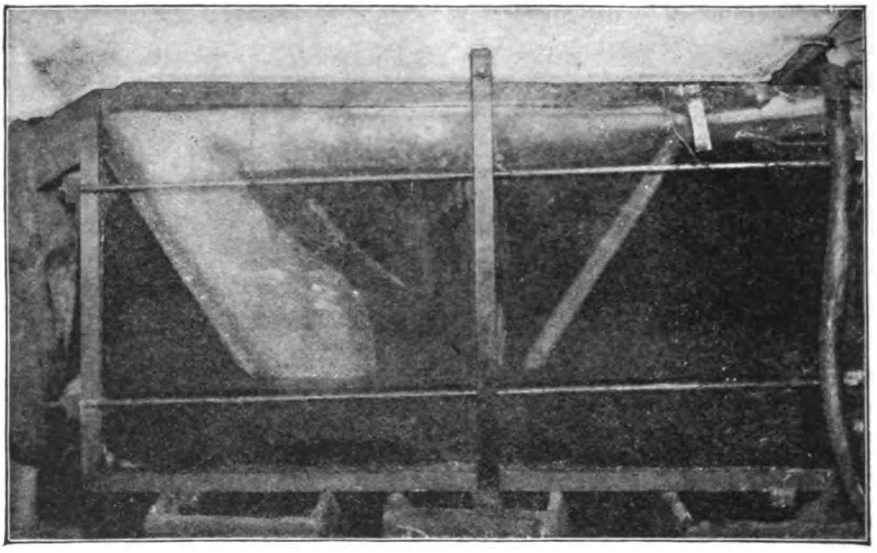

FIG. 147. — FEED SLOPING 5°; LEVEL WITH OVERFLOW. CURRENT, 86.4 KILOGRAMS PER MINUTE. WEDGE ANGLE, 6°.

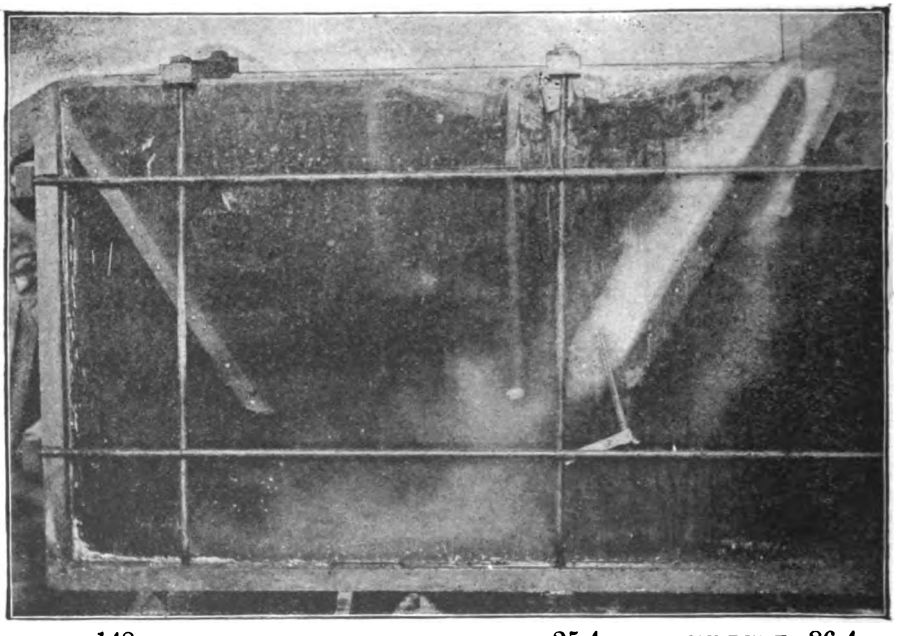

FIG. 148. — FEED HORIZONTAL; ELEVATED 25.4 MM. CURRENT, 86.4 KILOGRAMS PER MINUTE.

As representing nearly the speeds of the three boxes of Linkenbach for a width of 203 mm., three rates of current were selected, namely, 86.4, 57.3, and 38.6 Kg. of water per minute respectively.[1] In each experiment, the feed sole

[1] The exact figures should have been 89.1, 59.3 and 39.5 Kg. for the width of 203 mm. The error was made by accident, but the difference is of no moment in this connection.

and the partitions were adjusted as desired; the water quantity was weighed, using a bucket and spring balance; the water current was allowed to establish itself thoroughly; the milk of lime was added till it had just defined the main currents; and the flash-light picture was then taken. Figs. 145, 146, 147, and 148, are copies of a few of those taken during the investigation. They show that the current is not of equal section and velocity, but is in the form of a wedge, widening downward and diminishing in velocity as it moves onward, and when it reaches the overflow it has received so much added water from the stagnant pool, that only the top portion of the current can pass off by the overflow; the rest passes down as a return eddy, disturbing the stagnant pool and sending fine slimes into the spigot product, which belonged in the overflow.

§ 323. RESULTS OF THE INVESTIGATION. — The following considerations, derived from the above investigation, show how the quality of the work is affected according as the formation of a uniform current is helped or hindered: (1) The relative height of feed sole and overflow. (2) The slope of the feed sole. (3) The quantity of pulp per unit of width.

In regard to the height of the feed sole, the experiments of the author corroborate the position held by Rittinger, namely, that the surface of the feed sole at the junction with the box should be exactly level with the overflow. If it is 25.4 mm. above the level, a plunging stream (see Fig. 148), which seeks the bottom of the box, will be obtained; less elevations will tend in the same direction to a less degree. If it is depressed 25.4 mm. below the overflow, the velocity is greatly retarded and the current wedge widened; less depressions have the same effect to a less degree.

In regard to the slope of the feed sole, it is found that if it is horizontal, an irregular bank of sediment will settle upon the feed sole, deranging the evenness of the work; if it is too steep, the current takes with it too much eddy water, thereby slowing the current and widening the wedge; if its slope angle is greater than half of that made by the surface of the water with the plane of the head end of the box, then the current will dive down and hug the head end of the box. The slope angle of the feed sole, which gives the best results is 5°, possibly varying to 10°. Compare Fig. 147 with Figs. 145 and 146, with all the different water quantities. It gives the highest speed of current, the narrowest wedge angle and no sediment on the feed sole. On the other hand, it is true that the higher the velocity of the water, the narrower will be the wedge angle. It is also true that the 5° feed slope appears to reach a minimum in this respect, and when high speed of water was attained by using a cycloidal feed sole with 152.4 mm. fall, no gain was found in the angle.

In regard to the quantity of pulp per unit of width, it is found that the retarding of the current and the increase of the wedge angle are less with larger and more with small quantities of pulp. For example, with 5° slope of feed sole, feeding pulp at the level of the overflow, angles of the current wedge were obtained as given in Table 74. Compare also Figs. 145 and 146.

TABLE 74. — WEDGE ANGLES FOR DIFFERENT QUANTITIES OF PULP PER UNIT OF WIDTH.

Pulp per Minute per Meter of Width.	Width, Corresponding to 100 Liters Pulp per Minute.	Angles of the Current Wedge.
Liters.	Mm.	Degrees.
425.1	235.2	10
282.0	354.6	16
190.0	526.4	20

To show the proportion between the overflow and the eddy current, an approximate estimate was made of the two quantities, which yielded the values given in Table 75. These figures give an approximate idea of the amount of water picked up by the main current, while forming the wedge, during its passage,

TABLE 75. — SHOWING THE PROPORTIONS BETWEEN THE OVERFLOW AND EDDY CURRENTS FOR VARIOUS RATES OF FEED.

Feed Water per Minute.	Overflow per Minute.	Eddy Current per Minute.	Ratio of Eddy Current to Feed Water.
Kilograms.	Kilograms.	Kilograms.	
86.4	86.4	132.1	1.5
57.3	57.3	258 7	4.5
38.6	38.6	226.5	5.9

which amount, of course, is equal to that given up in the return eddy current. It should be noted that the top of the wedge is moving much more rapidly (275 mm., 211 mm., and 179 mm. per second, for the three ratios of feed given above), than the bottom of the wedge at the widest part (76 mm., 63 mm., and 35 mm., per second). To try to reduce the eddy current, the author experimented with a horizontal board perforated with holes 6.35 mm. in diameter, and 25.4 mm. from center to center, one row staggered with the next, placed over the stagnant pool, for confining the current at the surface, and finds that it largely does away with the mixing of fine silt with the spigot product, if a balanced hydraulic is used. The advantage is more marked with the higher speed than with the lower.

The author's conclusions are that the box classifier is a scientifically imperfect apparatus. It cannot be fed with such a product or at such a rate, or with such adjustments that it will do perfect work. There is always the return eddy current to contaminate the spigot product. In this respect it differs from the best of hydraulic classifiers for they can do perfect work if they are run slowly with plenty of hydraulic water, and their departure from perfect work is due to the rush and drive to get commercial results. To get the best results from it with normal running, use 5° slope for the feed sole, enter the feed at the level of the overflow and have the overflow perfectly level. To get the best results where it is desired to keep rich, fine slimes out of the earlier spigot products, use slightly deficient hydraulic water, which nearly supplies the spigot with water. This will be commercially wise only when the fine slimes are very rich. The supply of hydraulic water is better introduced from below, so as not in any way to disturb or interrupt the surface current. The hydraulic pipe in this case is best of large size in order that the hydraulic water may have a low velocity.

Comparing a surface current with a whole current, the former stretches out the products in space to suit the positions of the machines and, at the same time, gives the more perfect sorting. The machines following a surface current apparatus get the better sorted products for feed.

§ 324. RITTINGER'S POINTED BOXES OR SPITZKASTEN APPARATUS. — (See Figs. 149*a* and *b*.) This is a series of hopper shaped or pointed boxes in which the width of each is double that of its predecessor, while the lengths increase by arithmetical progression. He recommends for each Austrian cubic foot (31.5857 liters) of pulp fed per minute, a width of 0.1 Austrian foot (31.6108 mm.) for the first box and the sizes of boxes which he gives for treating 20 cubic feet (631.7 liters) per minute, making four spigot products and an overflow are shown in Table 76.

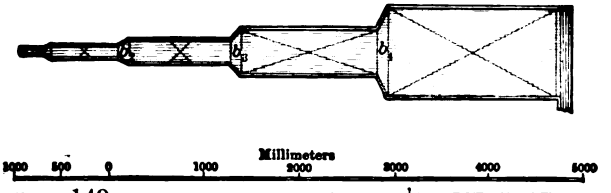

FIG. 149*a*. — PLAN OF RITTINGER'S SPITZKASTEN APPARATUS.

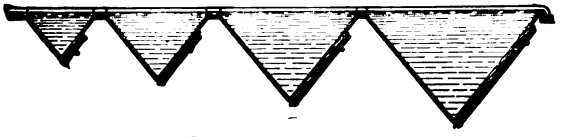

FIG. 149*b*. — LONGITUDINAL SECTION.

TABLE 76. — SIZES OF RITTINGER'S POINTED BOXES.

Width of Box.		Length of Box.	
Austrian Feet.	Mm.	Austrian Feet.	Mm.
1st box..... 2	632	1st box..... 6	1,897
2d box..... 4	1,264	2d box..... 9	2,845
3d box..... 8	2,529	3d box..... 12	3,793
4th box..... 16	5,058	4th box..... 15	4,742

The sides *b* of the boxes must slope as much as 45° with the horizontal, else banks will form which are liable to slide down and choke the spigot. He recommends 50° as a good minimum slope to adopt. If the slope is steeper than 50° for the larger boxes, they become unreasonably deep and require too much mill height. If a spigot is placed at the apex, too large a quantity of discharge will be made; a rising discharge *t* is preferred. (See Fig. 150.) For the first spigot, the outlet of the rising discharge should be 3 to 3½ feet below the surface of the water in the box; for the last, 2 to 2½ feet.

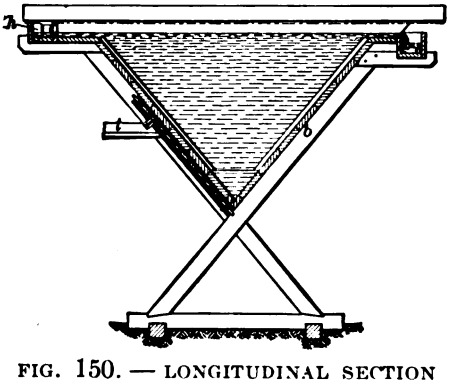

FIG. 150. — LONGITUDINAL SECTION OF SECOND BOX.

§ 325. WHOLE CURRENT-BOX CLASSIFIERS. GENERAL. — The ideal classifier of this group is provided with a feed apparatus which distributes the pulp over the whole cross-section, starting all parts of the current alike, and maintaining its flow at a uniform rate to the further end. It should be designed according to the rules given for settling tanks, which are preferably square with bottom divided up into small hoppers.

The speed of the current is much slower than that of the surface-current box, and its carrying power for the coarser grains is very much less. Grains of any specified size will, therefore, be dropped very much nearer the head end than in a surface current apparatus. If it is discharged continuously by spigots, each spigot product will be contaminated with fine slimes which belong in later spigots or in the overflow.

These classifiers in the square form, with hoppers below, are the most perfect settlers there are, but they yield the products so nearly together at the start that unless this has been allowed for in mill construction, the mill man finds his first vanner or table overloaded and his last with nothing upon it. This difficulty is easily remedied by launders, if the mill has a little height to spare, and the advantage of the good settling may be utilized in one of two ways:

(1) If it is desired to feed the machines which follow, with classified products, then the collecting launders for the spigots will run across under the tank, collecting all the No. 1 spigots together (see Fig. 151), the No. 2 together, and so on. Thus, in a case where four grades of products were being made, the first coarser product may be sent to two or more machines designed to treat it. The No. 2 spigots will probably supply one machine. The No. 3 and No. 4 spigots may need to be combined to feed one machine.

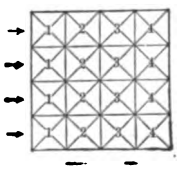

FIG. 151.

(2) If it is desired to feed whole pulp to every machine, then the collecting launders may run lengthwise under the tank and each launder receives a like quantity and size as its neighbor from its set of spigots, one each of No. 1, No. 2, No. 3, and so on, and all the machines which follow are fed alike, both as to quality and quantity of pulp. Whichever of these schemes is adopted, the overflow is thoroughly settled waste water.

Such a tank will require at the feed end a large surface of fine screen, 1-mm. holes punched in plate, to remove the fiber and chips of wood floating in the water, and a vertical screen plate, with perhaps ½-inch holes, to break up the current and start uniform velocity.

A V box may give almost equally good results if it has sufficient size, both in section and length, and has a row of spigots along the bottom. The two qualities of products may easily be obtained here as in the other case, by sending successive spigot products to the successive machines where approximately sorted products are wanted or by collecting all the spigot products together and then distributing them where like whole pulp is desired on all machines.

§ 326. Ascending-Current Cones or Cylinders. The Callow Cone. — The Callow cone is the invention of J. M. Callow. This is a conical settling tank with vertical central feed, peripheral overflow, annular launder to collect and convey away the overflow, and a spigot in the form of a gooseneck to discharge the settlings.

In Figs. 152*a* and *b* the angle between the sides of the cone is 60°. A diameter of 8 feet at the rim is found to adapt itself best to mill work. The rim launder is 4½ inches wide and deep. The overflow rim (1) is of rubber belt for ease of leveling. The central feed pipe (2) is 12 inches in diameter, and dips into the water 12 inches. The feed is admitted and the currents broken up by a feed box (3), a cone (4), and a disc float (5), as shown in the cuts. The spigot gooseneck (6) is of 1¼-inch pipe and 1¼-inch hose, with a gate valve (7) for shutting it off and a globe valve (8) for letting on pressure water from the hydrant in case of a stoppage. The discharge end of the gooseneck is from 12 to 16 inches below the water level in the cone, and it is constricted at the tip to ⅜ or $\frac{7}{16}$-inch diameter of discharge opening. This tank can be built of No. 16 steel plate, which is easy to work and has the advantage of low cost. Such a tank weighs 650 pounds.

On Butte copper slimes, 57 Callow tanks, each supplied with 31.4 gallons of pulp per minute, yielded 5.2 gallons spigot product a minute, reducing the quantities of pulp at the ratio of 6.03 to 1, with details as shown in Table 77.

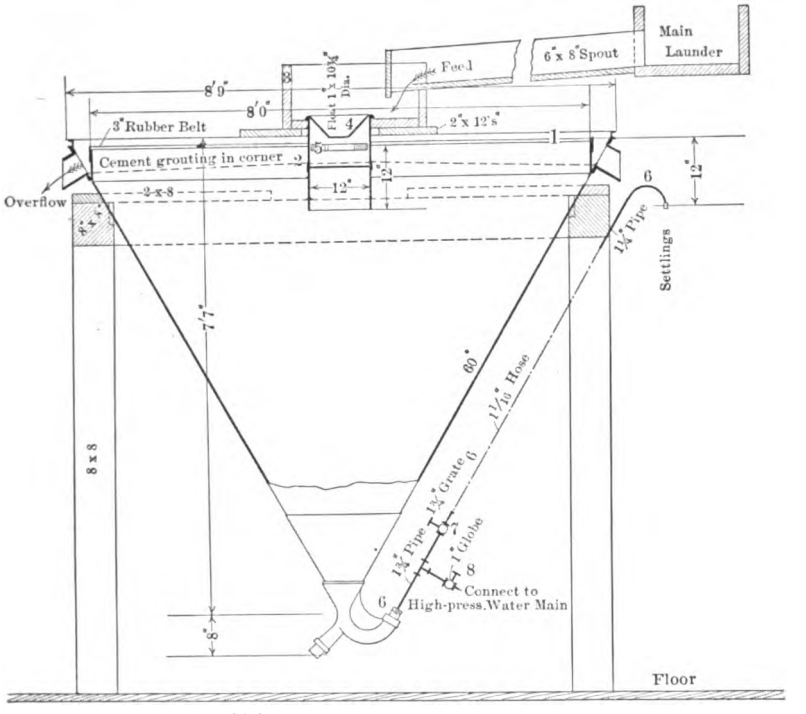

FIG. 152*a*. — CALLOW SETTLING CONE.

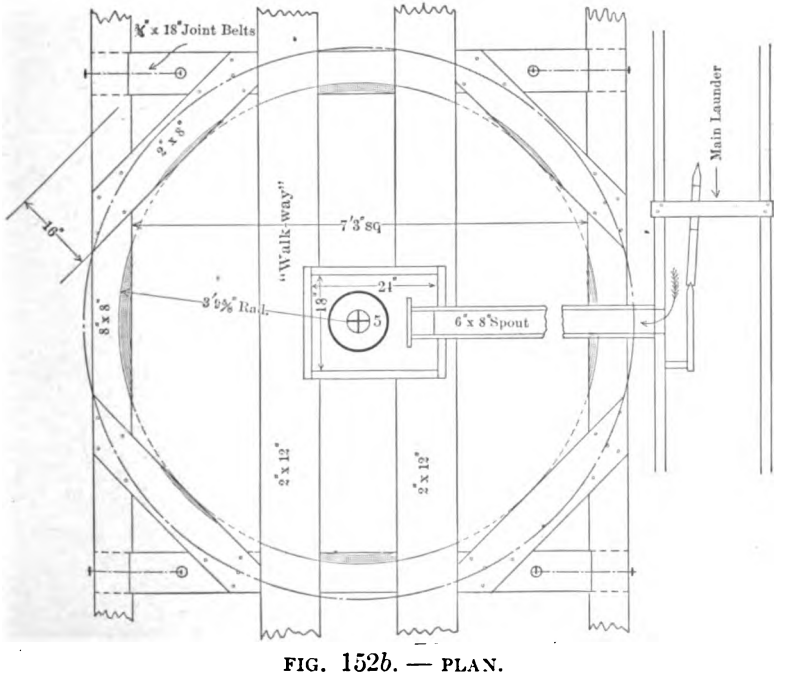

FIG. 152*b*. — PLAN.

TABLE 77. — CALLOW CONE TEST ON BUTTE COPPER SLIMES.

	Total Gallons per Minute.	Grams per Gallon.	Tons per 24 Hours.	Assay Per-cent. Copper.	Ounces Silver per Ton.	Total Contents 24 Hours.	
						Pounds Copper.	Ounces Silver.
Feed	1,792.7	41.15	117.16	2.8	2.81	6,559	329
Overflow	1,495.0	16.25	38.45	1.815	2.36	1,394	90.8
Spigot product	297.5	154.5	73.13	3.5	3.34	5,106	244.3

The tanks recovered 62.5% of the solids contained in the feed, reduced the same to 16.6% of its original bulk, and gave a spigot product carrying 77¾% of the copper and 74¼% of the silver. This pulp was treated on 30 Wilfley tables. The mill using them now recovers per month 80,000 pounds of copper and 3,500 ounces of silver from a feed of 2,000 gallons of slime water per minute, which previously was lost. The Butte slimes constitute 10% of the ore and the copper content is 10% of that in the ore. Half of this is saved on the tables. Later the spigot was thickened to 400 grams dry pulp per gallon to suit the Wilfley tables. In another Butte mill round tables give a good result in treating this spigot product.

As a general rule when treating Butte copper slimes each tank receives 30 gallons of pulp per minute carrying 40 grams (1.06% solids) dry slime per gallon, and delivers overflow with 3 to 4 grams per gallon (practically clear water), and thickened pulp 300 grams per gallon (8% solid), a settling ratio of 9.3 to 1, or about 2 tons per tank per 24 hours. For Cœur d'Alene slimes it is customary to feed 35 gallons of pulp per minute, and since the galena is heavier, the yield per tank is about 3 tons per 24 hours. The Uncle Sam Consolidated Mining Company of Eureka, Utah, treating 80 tons per day where water is excessively scarce, requires 200 gallons per minute in its machines, and yet there is an actual loss of only 5½ gallons of water per minute. Eight Callow cones unwater the tailings and return clear water to the mill to be used again. The water actually lost to the mill circulation is only ½ ton per ton of ore treated.

The annular area outside the feed pipe is 4,595,689 square millimeters. Thirty gallons per minute gives a volume of 11,746,250 cubic millimeters. The cubic millimeters divided by the square millimeters give the rising current of 24.3 millimeters per minute, or 0.4 millimeter per second. Referring to Table 157 we can see that the size of the particle of quartz that can be lifted by this current is 0.024 millimeter in diameter. The writer believes that, when the investigation is made to ascertain the actual diameter of these grains, they will be found to be smaller than 0.024 millimeter. The great success of the Callow system is due to the fact that, instead of pushing the whole pulp from one end to the other of a long narrow settling tank, the clear water is allowed to rise to overflow, while the thickened pulp settles downward to be discharged.

THE AYTON INTERMITTENT THICK PULP EXTRACTOR, is a hopper-shaped unwatering box with a large spigot plug below, which is periodically opened by a mechanically driven cam and closed by a lever and spring. (See Fig. 153.) A box measuring 10 × 10 × 8½ feet deep should deliver 8 to 10 tons of thick pulp in 24 hours. At the El Bote mill, Zacatecas, Mexico, the pulp from the six Chili mills contains 85 to 90% water. This is sent to the pulp thickener, which returns 78 to 87% of the water to the Chili mills. The remaining 13 to 22% passes out of the spigot as thickened pulp containing only 40% water.

§ 327. CLARIFYING TANKS. — Many tanks used primarily as pulp thickeners also perform the function of clarifying tanks. Under this heading will be described only such devices as have been designed primarily with the view to returning clear water to the mill circulation. As is well known in certain districts

where water is scarce, the entire success of many an ore-dressing project depends upon the ability to clarify and return to the mill circulation a very large percentage of the water employed in the ore-dressing operation. One scheme only will be described.

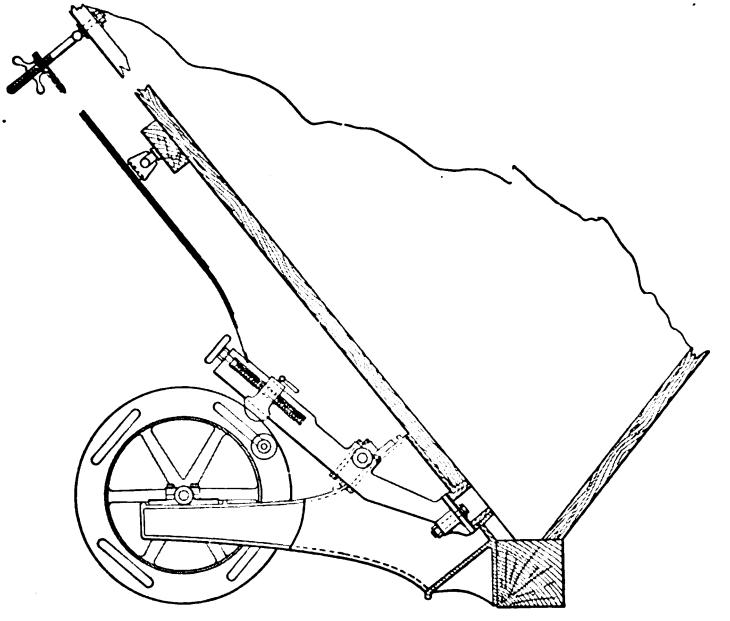

FIG. 153. — THE AYTON INTERMITTENT THICK PULP EXTRACTOR.

§ 328. BINKLEY SETTLING SYSTEM. — The following system of settling tanks was devised and used by George E. Binkley with the idea of saving the largest possible percentage of water for return to the mill system. The system was so arranged that the mill tailings once elevated to the top of the mill would run by gravity through the entire system and deliver clear water to the mill storage tank without pumping. The arrangement of settling tanks is shown in Fig. 154. The sand tank *A* was 5 feet deep, 10 feet wide, and 20 feet long.

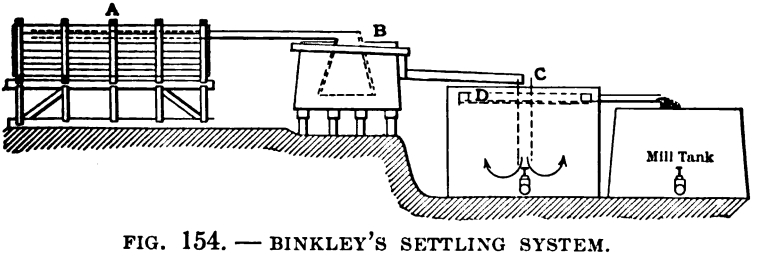

FIG. 154. — BINKLEY'S SETTLING SYSTEM.

It was divided into eight compartments so arranged that a continuous flow could be obtained through the whole or a part of the compartments. Each compartment had a discharge door in the bottom and was discharged intermittently after being cut out of circuit.

The slimes passing from the sand tanks were delivered to the heavy slime

separator *B*. This was provided with pyramidal down-take box so that the velocity of the descending column of heavy slime would be decreased and the velocity of the ascending column also uniformly decreased, as the overflow lip of the tank was approached.

The overflow from the slimes separating tank was passed into a large slime tank *C*, provided with a skimming trough *D*, constructed as shown in Fig. 155 and introduced into the tank *C*, as shown. This scheme worked well as long as a thin layer of clear water remained at the surface of the water in the tank. This condition is maintained by regulation of the spigot discharge. Clear water was discharged even when over 30 gallons per minute were passing. The length of weir formed by the skimming launder was so great that the overflow over the lip did not exceed, in depth, $\frac{1}{32}$ inch. With this arrangement of tanks, even when treating a very slimy ore, 88% of the water was recovered and returned to the mill system. Both tanks *B* and *C* discharge the settled material through gates at the bottom as shown in the cut.

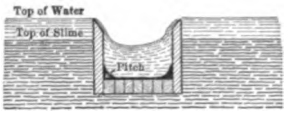

FIG. 155. — SKIMMING LAUNDER.

§ 329. CLARIFYING RESERVOIRS. — Clarifying reservoirs are ponds into which water containing slimes is allowed to flow. The slimes are precipitated and the water flows away clear. The pond is cleaned out from time to time and the sediment carted away.

§ 330. DISTRIBUTING DEVICES. THE DIMMICK CLASSIFIER. — The Dimmick classifier is a V-shaped tank, with the bottom of the V acting as a base. It is made of sheet steel and measures 16 feet long, 10 feet high, and 9 feet wide at the top. The ends are perpendicular to the lower edge. A vertical partition with an adjustable gate at the bottom divides the classifier into two equal parts. It classifies the pulp by allowing the grains to fall in a gradually moving current of water. The heavy grains drop out first, the lighter ones following.

The pulp is delivered to one end of the classifier and is directed against one of the sloping sides. The coarser sands pass at once to the bottom and the finer ones gradually settle as the current drags them along. Those that are not deposited in the first compartment are forced through the gate to the other. This gate is adjustable from the surface so any desired opening may be had while the classifier is in operation. Along the sides, near the bottom of the classifier, are placed jig cocks 2 feet apart. Between these cocks are placed partitions, extending from the bottom of the tank as high as the openings in the central partition. By this arrangement the particles that by their superior weight get below the small partitions must stay there and pass out by their respective cocks in that compartment, and so on. The fine particles that have not settled in the first half of the classifier are carried through the gate to the second compartment where the same operation takes place. The carrying current decreases in the second part of the classifier, and very little, if any, current is noticed at the lower end. Under these conditions the finest slimes settle out. The water is clear in the second part of the classifier for about 2 feet from the top, showing the perfect settlement of the slimes.

§ 331. DISTRIBUTING OR SIZING LAUNDER. — The Dimmick Sizing Launder is a device whereby a stream of pulp, flowing in a launder with a bottom sloping downward toward both sides from the center, is subjected to a classifying action and prepared for subsequent concentration. As a result of the shape of the launder bottom the heavier particles of pulp, which always occupy the bottom, gravitate down the slopes, toward the sides, so that the coarsest material is constantly crowded against the side and bottom in passing. At intervals in the side boards of the launder, opposite each other, openings for gates are

cut. These openings are placed in front of and connecting with a race or sluiceway, cut into the beveled bottom of the launder. The race or sluiceways are of the same width as the gate openings and extend tangentially from the center apex of the bottom backward and sideward to the gate openings, the cut commencing at the center apex of the bottom, and increasing in depth on a true, even slope to the gates. The gate openings are covered by adjustable sliding gates which allow any desired amount of material to be drawn off, and always the coarsest in the first two gates, the next finest in the next two, and still finer in the third, while the very fine and slimes will pass on through, the coarser having been eliminated in graduated sizes, and by placing separate launders under the respective gate openings are taken separately to the concentrating tables.

The inside of the side boards is fitted with strips lengthwise, on which comb precipitators rest. These can be moved backward and forward on the strips to the point desired just in front of the sluiceways in the bottom and held in place by eccentric buttons above them on the sides. These comb precipitators consist of a series of pins staggered. They serve to arrest the motion of the pulp and throw the particles to the bottom so that they may be drawn out into the sluice.

§ 332. REVOLVING DISTRIBUTOR OR DIVIDER. — Figs. 156*a* and *b* show a

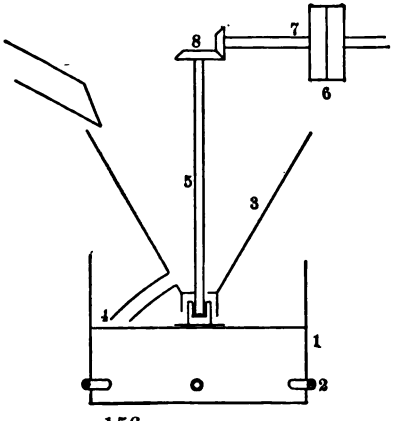

FIG. 156*a*. — MECHANICAL DIVIDER.

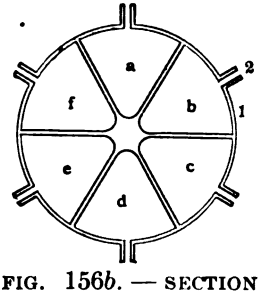

FIG. 156*b*. — SECTION SHOWING POCKETS.

form of mechanical divider which might be useful where it is desirable to divide a product between a number of machines assuring an equal feed to each. The device consists of a cylindrical tank (1) divided by suitable partitions into several equal compartments, *a*, *b*, *c*, *d*, *e*, and *f*, each furnished with a spout (2), which serves to deliver its product to the machine for which it is intended. Revolving above the pockets or compartments *a*, *b*, *c*, *d*, *e*, and *f*, is a conical hopper (3) with one discharge spout (4). This hopper is secured to and revolves with the vertical shaft (5), which is actuated, in turn, through the tight and loose pulleys (6), shaft (7), and bevel gears (8). Pulp is conducted into the revolving hopper by way of the spout (9) and, as the hopper revolves, is divided into as many equal parts as there are compartments in the tank (1). Thus, if we have six jigs treating the same product, the device just described serves to give to each jig its proper share of the feed. If, moreover, it becomes necessary to shut down one jig, by plugging the discharge spout leading to that jig, the load can be divided fairly evenly between the remaining machines.

§ 333. LIMITATIONS OF THE HYDRAULIC CLASSIFIERS. — In the Lake Superior region nothing larger than 4.76 mm. ($\frac{3}{16}$ inch) is fed to hydraulic classifiers. The usual Missouri and Montana limit is 2.5 mm., the only exception being where grains up to 8 mm. are treated in an annular classifier in one of the mills. The speed of settling and therefore the quantity of water required are too large for using a classifier on grains much larger than 8 mm., also the spigot cannot be less than, and should be more than, three times the diameter of the largest grain. This calls for a large quantity of water in the spigot product. At the fine end little hydraulic classification is attempted on grains finer than 0.15 or 0.1 mm., on account of the extreme slowness of settling and the consequent cutting down of capacity. The fines are settled for further treatment in surface current-box classifiers (*spitzkasten*), in Callow water cones, or some similar device.

CHAPTER X.

PRINCIPLES OF SCREEN SIZING AND CLASSIFYING.

Under this heading might be expected a discussion of the relative advantages and disadvantages of these two methods of preliminary treatment. These points will, however, be better understood when the concentrators have been studied. In this chapter, therefore, we shall discuss the theory of screening and classifying without much reference to the particular merits or demerits of either system.

Principles of Screen Sizing.

§ 334. Sieve Scale. — The list of successive screen sizes used in any mill, taken in order from coarsest to finest, is called the *sieve scale.* Rittinger held that in such a set the diameter of the holes in any screen must bear some constant ratio to that of the one above it, thereby making the sieve scale a geometrical series. He adopted 1.414 ($= \sqrt{2}$) for this ratio; and his sieve scale starts with 1-mm. hole, and ranges up and down from that point. It is given in Table 78.

TABLE 78. — RITTINGER'S SIEVE SCALE.

Diameters.	Areas, if Holes are Square.	Volumes, if Particles are Cubes.	Diameters.	Areas, if Holes are Square.	Volumes, if Particles are Cubes.
Mm.	Sq. Mm.	Cu. Mm.	Mm.	Sq. Mm.	Cu. Mm.
64.0	4,096	262,144	2.8	8	22.6
45.2	2,048	92,668	2.0	4	8.0
32.0	1,024	32,768	1.4	2	2.8
22.6	512	11,583	1.0	1	1.0
16.0	256	4,096	0.71	0.5	0.35
11.3	128	1,448	0.50	0.25	0.125
8.0	64	512	0.35	0.125	0.044
5.7	32	181	0.25	0.063	0.016
4.0	16	64			

For testing purposes we may go even further and adopt as our ratio $\sqrt[4]{2}$ = 1.189. This sieve scale is known as "Double Rittinger." We find very few of the mills with a sieve scale that has a constant geometrical ratio. Sometimes such a ratio exists in a part of the sieve scale, but not always. Occasionally we find an arithmetical series, 7, 5, 3, 1 mm. for example.

§ 335. Single or Multiple Ratio? — There are many reasons why a singe ratio running through the whole sieve scale may not be advisable. The scale may be divided, having an upper portion with one ratio, a lower with another. Practically, the sieve scale is developed by the exigencies of the mill, the ratio increased or decreased between any two screens where the particular work seems to demand it. This change can be easily made when a screen wears out and is changed. The ratio to be adopted depends mainly upon the specific gravities of the grains — in a general way the greater the difference in specific gravity between the *values* and the *waste,* the greater may be the ratio between the diameters of holes in successive screens. This is true because the ease of

the subsequent separation increases with the difference in specific gravity. Certain other considerations, however, modify the ratio, as follows:

(*a*) The difficulty of the subsequent separation increases with the difference in the sizes of grains treated together, that is to say, with an increased ratio. (*b*) A product which consists mainly of cubes or compact forms, can have a larger ratio than one which has a large percent. of flat scales and elongated grains mixed with compact forms. (*c*) If the minerals are near each other in specific gravity or if the ore breaks so as to give a considerable proportion of included grains, with intermediate specific gravity then close sizing (that is, a small ratio) will generally give cleaner products on the jigs following; but if the minerals are in a coarsely crystallized condition, tending to make but little in the way of included grains, a larger ratio may be used than if the crystals are fine. (*d*) Where such a large quantity of material comes on to any screen as to require an increase of the number of screens treating that size, and more than one concentrating machine to treat the product, it may be better to diminish the ratio, using two successive screens with different sizes of holes, rather than to use two screens side by side with the same size of hole. The advantage of a closer sizing will thus be obtained. There may also be cases where it will be perfectly safe to increase the ratio in order to get the desired quantity of ore for some following machine. (*e*) The increase in slimes and mineral loss, due to too much screening, may be more harmful than the imperfect work due to too large a ratio. This would point to the use of a large ratio. (*f*) The portion of the sieve scale devoted to hand picking generally has a large ratio; but it is not well to have this ratio too large, for the eye and mind cannot deal as well with 1-inch pieces and 3-inch pieces together as with either taken separately. (*g*) If the ore is so friable and tender as to require careful, graded crushing, the upper part of the sieve scale will need a smaller ratio than if such graded crushing is not necessary. (*h*) The tailings from the coarse jigs may be so rich that it is necessary to re-crush and re-wash them, in which case the ratio of sizes fed to these coarse jigs may be large, because the quality of the tailings does not require close attention; while, on the other hand, the tailings from the fine jigs, being waste, will require closer attention, and therefore a smaller ratio may be advisable.

To sum up the matter, it seems clear that there are four regions of the sieve scale, each one of which, from considerations of its own, may need a greater or less ratio between its screens. They are: (1) The hand-picking region; (2) The graded crushing region; (3) The coarse jigging region; (4) The fine jigging region. The second may cover the same ground as a part or the whole of the first and third regions.

The following is a partial list of Harrington & King's elongated punched holes:

Dimensions of Holes.	Space between Holes.
Inches.	Inches.
½x¼	¼
1x½	½
6x3	1

In this list, the sizes between the first and second, and those between the second and third, are graded from one to the other. These holes are arranged in either of three different ways. The dimensions L, W, and S, indicated in Fig. 157, are the length, width, and space in the above list.

Table 79 is a partial list of the double-crimped wire screens carried in stock by the W. S. Tyler Co. This table illustrates the disadvantage of designating

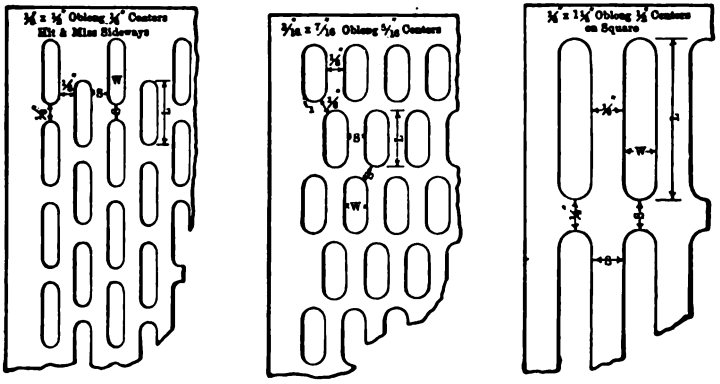

FIG. 157. — ELONGATED PUNCHED SCREEN HOLES.

TABLE 79. — TYLER DOUBLE-CRIMPED WIRE SCREENS.*

Meshes per Linear Inch.	Iron or Steel.				Copper or Brass.			
	Ranges in Diameter of Wire.	Ranges in Width of Hole.		Ranges in Percentage of Opening.	Ranges in Diameter of Wire.	Ranges in Width of Holes.		Ranges in Percentage of Opening.
	Inches.	Inches.	Mm.	%	Inches.	Inches.	Mm.	%
.....	1.0–0.375	4	101.6	64–84	.....	.....	.....	.....
.....	1.0–0.250	3	76.2	56–85	.....	.....	.....	.....
.....	1.0–0.192	2	50.8	44–83	.....	.....	.....	.....
.....	0.75–0.162	1	25.4	33–74	.....	.....	.....	.....
.....	0.44–0.120	0.5	12.7	28–65	.....	.....	.....	.....
.....	0.192–0.092	0.25	6 35	32–53	.....	.....	.....	.....
1	0.244–0.072	0.756–0.928	19.2–23.6	57–86	.....	.....	.....	.....
2	0.192–0.047	0.308–0.453	10.6–14.5	38–82	0.162–0.047	0.338–0.453	8.6–11.5	46–82
3	0.135–0.035	0.198–0.298	5.03–7.57	35–80	0.135–0.035	0.198–0.298	5.03–7.57	35–80
4	0.120–0.028	0.130–0.222	3.30–5.64	27–79	0.120–0.032	0.130–0.218	3.30–5.54	27–76
6	0.080–0.020	0.087–0.147	2.21–3.73	27–78	0.080–0.025	0.087–0.142	2.21–3.61	27–73
8	0.063–0.017	0.062–0.108	1.57–2.74	25–75	0.063–0.020	0.062–0.105	1.57–2.67	25–71
10	0.047–0.015	0.053–0.085	1.35–2.16	28–72	0.054–0.018	0.046–0.082	1.17–2.08	21–67
12	0.041–0.014	0.042–0.069	1.07–1.75	25–69	0.047–0.017	0.036–0.066	0.91–1.68	19–63
16	0.032–0.0095	0.031–0.053	0.77–1.35	25–72	0.035–0.0135	0.0275–0.049	0.70–1.24	19–61
20	0.025–0.009	0.025–0.041	0.64–1.04	25–67	0.025–0.0095	0.025–0.0405	0.64–1.03	25–66
30	0.016–0.009	0 017–0.024	0.44–0.62	26–52	0.017–0.008	0.0163–0.0253	0.41–0.64	24–58
50	0.010–0.008	0.010–0.012	0.25–0.30	25–36	0.011–0.008	0.009–0.012	0.22–0.30	20–36
80	0.00725–0.007	0.0052–0 0055	0.132–0.140	17–19	0.00625	0.00625	0 159	25
100	.....	.....	.....	.....	0.0045	0.0055	0.140	30

* For the 1-mesh screens there are 13 sizes of holes between the limits indicated in the table. This number decreases for the finer screens, until for 80 mesh there are but two sizes of holes for steel and but one for brass.

screens by the number of meshes per linear inch. With the actual commercial sizes, an 8-mesh screen may have holes 24% wider than 6-mesh, on account of different sizes of wire used, although of the proportional sizes of wire are used, the 6-mesh hole is 25% wider than the 8-mesh.

§ 336. THE THICKNESS OF THE PLATE OR WIRE. — In deciding this there are five main considerations: (1) *The maintenance of the diameter* of the hole. The enlargement of the hole per ton of ore screened will be the same whether the metal is thick or thin, but the thinner metal will be discarded sooner and hence the change in diameter of hole will be less than with the thicker metal; (2) *The life* will increase with the thickness of the metal up to the limit of enlargement of hole that can be permitted; (3) *The running cost* consists of the first cost and the cost of changing screens, and is modified by the life of the screen. These two costs have opposite effects: the thick screen costs more at start, but is changed less often; the thin costs less, but is changed more often; (4) *The blinding of the hole.* There can be no doubt that blinding of the hole is more

apt to take place in a thick than in a thin screen; and further, when the flare of a punched hole is worn to a rounded shape, this effect will be increased. Cloth screens blind up more easily than plate; (5) *The percentage of opening.* In punched plate screens with large holes the percentage of opening may be made large by using thicker plate and leaving smaller spaces between the holes, which will maintain the necessary strength in the parting bars. In screens with small holes, other conditions exist which have precisely the opposite effect, namely, the plate is apt to be as thick as the hole is wide, and any attempt to thicken the plate further will necessitate placing the holes farther apart to avoid tearing the plate in punching, and this would decrease the percentage of opening. With cloth screens increased percentage of opening requires thinner wire, whatever the net size of hole.

§ 337. DIFFICULTIES OF SCREENING. — The ideal condition for screening would be to have the ore spread over the screen so that no two grains ever touched each other, but of course this cannot be attained in practice. The more crowding there is the harder it is for a grain that belongs in the undersize to pass through the holes. Of two similar screens receiving the same quantity of ore, the crowding and the difficulty of screening will be greater in the one where the feed contains the larger percentage of oversize. Another important element lies in the percentage of grains that are of about the diameter of the screen holes. The difficulty of screening increases with this percentage, both because the undersize grains of this class are apt to go into the oversize, and because grains of this class tend to blind the screen holes and so prevent the finer material passing through.

The reasons that fine screening is more difficult than coarse are that the feed to fine screens contains a much larger *percentage* of oversize and also a much larger percentage of grains that are about the size of the screen holes. Jarring is sometimes used to prevent blinding; the bands which hold the screen in place are provided with cams which, as the trommel revolves, serve to lift pivoted hammers which then fall striking the screen and so freeing the meshes. The spider arms are sometimes provided with sliding weights to give the necessary jar for keeping the meshes free. A better arrangement than this is to have short rods with sliding weights on the outside of the trommel screen. This is used quite extensively with trommels working dry, particularly with the finer screens.

§ 338. SHAPE AND ARRANGEMENT OF HOLES. — The practice is almost universal in this country to use round holes in punched plate, and approximately square holes in wire-cloth screens. The round holes of plate screens have the advantages that they give the most even product; the square holes of cloth and long holes of plate or cloth allow greater variation in the section of the maximum grain. Cloth screens give a greater percentage of opening and, therefore, of capacity than punched plate. Thomas A. Edison points out that the trajectory of a moving particle requires a hole to be lengthened in the direction of the path of the particle in order that the grain of maximum size may pass through the hole. Holes in rows making 60° with each other ("staggered"), give greater area of discharge than those with 90°. Punched-plate screens are usually laid out on the 60° plan.

§ 339. THE PERCENTAGE OF OPENING is the ratio of the net area of the holes to the whole area of the screening surface. It depends upon the arrangement of the holes and the amount of space left between them. It is obvious that the greater the percentage of opening, the more rapid and the more perfect will be the screening. The practical limit is reached when the strength of the screen is too much reduced. The thicker metal used for coarse screens allows a larger percentage of opening to be used than in fine screens. The percentage of open-

ing for round holes with different arrangements and spaces is as follows: If the space equals half the diameter of the hole the percentage of opening is 40.3% with the 60° arrangement, and 34.9% with the 90° arrangement; but if the space equals the diameter of the hole the percentages of opening are respectively 22.6% and 19.6%. Harrington & King's standard list of plate screens with round punched holes is given in Table 80, which shows also the space between the holes and the net percentage of opening.

TABLE 80. — SIZES OF ROUND PUNCHED HOLES IN PLATE SCREENS, AS MADE BY HARRINGTON & KING.

Diameter of Holes.	Spaces between Holes.*	Percentage of Opening.	Diameter of Holes.	Spaces between Holes.*	Percentage of Opening.
Mm.	Mm.	%	Mm.	Mm.	%
1	1.38	11	12.5	6.55	26
1.5	1.68	13	15	7.23	28
2	1.97	15	20	8.58	30
2.5	2.26	17	25	13.10	26
3	3.35	13	30	8.10	37
4	2.35	24	40	13.98	43
5	2.94	24			
6	3.53	24	Inches.	Inches.	
7	4.11	24	1.75	0.625	33
7.5	5.20	22	2.00	0.625	35
8	4.70	24	2.25	0.750	34
8	6.29	19	2.50	0.750	36
9	5.29	24	2.75	0.750	37
10	4.29	30	3.00	0.750	39

* The holes are arranged in equilateral triangles in all cases.

§ 340. THE LIMITS OF THE SIEVE SCALE. — The size of hole used in the coarsest trommel will be determined by considerations of graded crushing and of hand picking. The size of hole in the finest trommel, down to which screening shall take place, and beyond which the preliminary separation shall be made by hydraulic classifier, will be decided by three main considerations: (1) The hydraulic classifier can be run much more cheaply than the last one or two trommels; (2) On the other hand, the tailings of the jigs treating classifier products are much richer than those of jigs treating sized products; (3) The finer the screening is carried (that is, the later the hydraulic classification begins), the denser will be the fine pulp sent to slime tables because there will be fewer hydraulic classifiers, which are great diluters of the pulp. This is a distinct advantage for slime table work. The first of these considerations is an argument against fine screening, but the other two favor it. Each mill manager must decide whether *fine sereening* or *coarse classification* is better for his particular case. In this connection, it is debatable whether the more common European limit of 1 to 1.5-mm. holes for the finest screen is not better than the more common American limit of 2 to 3 mm. Since the introduction of the Callow screen it has become possible to carry screening down to very fine sizes and we now find a few mills using these screens for sizes as fine as 80 mesh.

THE ACTION OF TROMMELS.

In order to fully understand the operation of trommels, we will now consider the relations of their slope, diameter, and speed of revolution.

§ 341. EFFECT OF CENTRIFUGAL FORCE. — The increase in centrifugal force as the speed of revolution increases, and the effect of this increase, may be shown as follows:

In Fig. 158 let

w = weight of an ore particle.
c = centrifugal force.
f = natural angle of friction = angle between a horizontal and the tangent to the circle at the point where the ore slides, with gravity acting alone.
i = increase of f due to c.
v = peripheral velocity of the trommel in feet per second.
r = radius of the trommel in feet.
g = acceleration due to gravity = 32.16 feet per second.
s = sliding angle due to g and c combined, which, from the similarity of triangles, is equal to $f + i$.

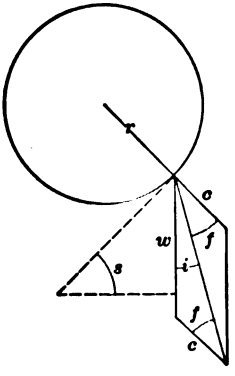

FIG. 158.

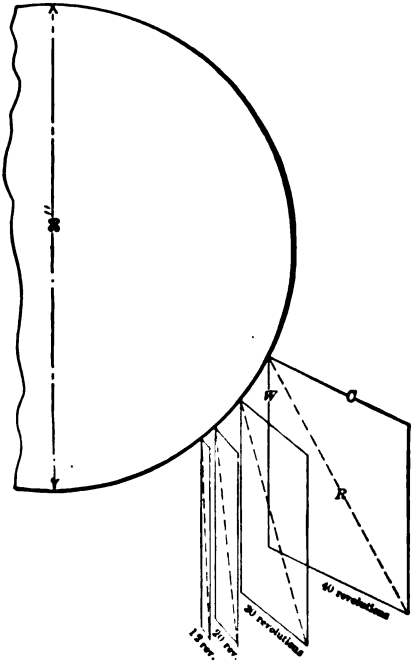

FIG. 159. — CENTRIGUFAL FORCE IN A 36-INCH TROMMEL.
W = weight of ore particles.
C = centrifical force.
R = resultant.

Now since the sides of a triangle are proportional to the sines of their opposite angles, $\frac{c}{w}\frac{\sin i}{\sin f}$ or $\frac{c}{w}\sin f = \sin i$; and substituting, in this formula, the value for centrifugal force, $c = \frac{wv^2}{gr}$, we get $\frac{wv^2}{wgr}\sin f = \sin i$, which, by cancellation, gives the required formula, $\frac{v^2}{gr}\sin f = \sin i$, which shows the increase in the angle of friction due to centrifugal force. We may assume f equal to 35°. When the sliding angle s or $f + i$ becomes 90° greater than 35° or becomes 125°, a particle of ore will be carried completely around the trommel.

Fig. 159 shows graphically, for a 36-inch trommel, the rapid increase of centrifugal force due to increase of revolutions; and also the different heights to which the ore will be carried. W, C, and R, represent the magnitude respec-

tively of the force of gravity (weight), the centrifugal force and the resultant force; and also their respective directions.

§ 342. RATE OF TRAVEL OF THE ORE. — The rate at which ore passes through a trommel depends on the slope of the trommel and the speed of revolution. As the trommel revolves, the ore fragment is carried upward to a point where the line of steepest declivity makes an angle with a horizontal plane equal to the angle of friction of the ore.

The pitch angle of the helical path that a free particle of ore will follow over the surface of the trommel, may be calculated as follows: In Fig. 160, let the

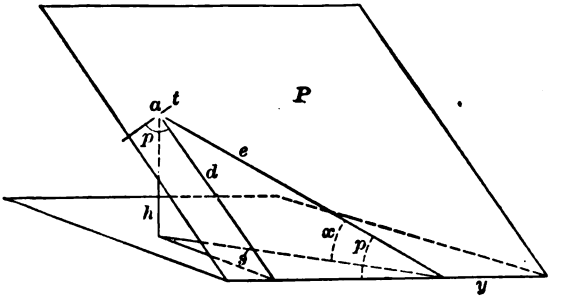

FIG. 160.

angle s between the plane P and the horizontal plane be the angle at which the ore slides. Let the line d be a line of steepest declivity in the plane P. Let the line e represent an element of the cylindrical surface of a trommel. Let t be a tangent to the cylinder in a plane of revolution of the trommel, and in the plane P. Let h be the distance from the point a on the trommel to the horizontal plane. The angle x, then, is the slope angle of the trommel, and the angle p between d and t, is the pitch angle, and is the same as the angle between e and y. Then:

$$\frac{h}{d} = \sin s, \text{ hence } d = \frac{h}{\sin s} \quad \frac{h}{e} = \sin x, \text{ hence } e = \frac{h}{\sin x}$$

$$\text{Hence, } \sin p = \frac{d}{e} = \frac{\frac{h}{\sin s}}{\frac{h}{\sin x}} = \frac{\sin x}{\sin s}$$

which gives the value of the required pitch angle. If the axis of a cylindrical trommel is horizontal, the pitch angle is 0° and the ore will not move in an axial direction. If the slope of the axis is the same as the angle at which the ore slides, the pitch angle is 90°, and the ore will pass out of the trommel along an element of the cylinder when the trommel is still.

Tables 81*a* and *b* gives the rotations made, and also the helical distances traveled by an ore particle to get through a trommel under varying conditions of diameter, slope, revolution, and length, as computed from the formula $\sin p = \frac{\sin x}{\sin s}$ and from simple equations depending on this formula.

§ 343. EFFECT OF SLOPE.—This may be stated in two ways: Other things being equal, with the same depth of bank increase of slope increases enormously the conveying power of the trommel; or we may say that for the same quantity of ore, with the steeper slope, the bank will be much thinner, and hence the screening much better. These facts, for a trommel 36 inches in diameter, 72 inches long, revolving 20 times per minute, are shown in Tables 82 and 83.

TABLE 81*a*. — ROTATIONS OF TROMMEL TO DELIVER A GRAIN OF OVERSIZE, AND THE HELICAL DISTANCE TRAVELED BY THE GRAIN.

Abbreviations. – Deg. = degrees; In. = inches.

Trommel 30 Inches Diameter.

Slope of Trommel.		16 Revolutions a Minute. Sliding Angle, 38° 35'.					18 Revolutions a Minute. Sliding Angle, 39° 33'.					20 Revolutions a Minute. Sliding Angle, 40° 37'.				
		Pitch Angle.	Rotations to Deliver a Grain of Oversize when Length of Trommel is		Helical Distance Traveled by a Grain when Length of Trommel is		Pitch Angle.	Rotations to Deliver a Grain of Oversize when Length of Trommel is		Helical Distance Traveled by a Grain when Length of Trommel is		Pitch Angle.	Rotations to Deliver a Grain of Oversize when Length of Trommel is		Helical Distance Traveled by a Grain when Length of Trommel is	
Deg.	In. per Foot.		60 In.	72 In	60 In.	72 In.		60 In.	72 In.	60 In.	72 In.		60 In.	72 In.	60 In.	72 In.
					In.	In.				In.	In.				In.	In.
2°	⅜ +	3°12′	11.36	13.63	1,072	1,286	3°09′	11.60	13.92	1,095	1,314	3°04′	11.86	14.23	1,119	1,343
2°30′	½ +	4°01′	9.08	10.90	858	1,029	3°56′	9.27	11.13	876	1,051	3°51′	9.48	11.38	896	1,074
3°30′	¾ –	5°37′	6.47	7.77	613	735	5°30′	6.61	7.93	626	751	5°23′	6.76	8.11	640	768
5°	1 +	8°02′	4.51	5.41	429	515	7°52′	4.61	5.53	438	526	7°42′	4.71	5.66	448	538
7°	1½ –	11°16′	3.20	3.83	307	368	11°02′	3.27	3.92	314	376	10°47′	3.34	4.01	321	385
9°30′	2	15°21′	2.32	2.78	227	272	15°01′	2.37	2.85	232	278	14°41′	2 43	2.91	237	284
14°	3	22°49′	1.51	1.82	155	186	22°20′	1.55	1 86	158	189	21°49′	1.59	1.91	161	194

Trommel 36 Inches Diameter

		16 Revolutions a Minute. Sliding Angle, 39° 18'.					18 Revolutions a Minute. Sliding Angle, 40° 27'.					20 Revolutions a Minute. Sliding Angle, 41° 44'.				
					In.	In.				In.	In.				In.	In.
2°	⅜ +	3°09′	9.64	11.56	1,089	1,306	3°05′	9.85	11.82	1,116	1,338	3° 0′	10.12	12.15	1,144	1,373
2°30′	½ +	3°57′	7.68	9.21	871	1,045	3°51′	7.87	9.45	892	1,071	3°45′	8.09	9.70	916	1,099
3°30′	¾ –	5°32′	5.48	6.57	623	747	5°24′	5.61	6.74	638	765	5°16′	5.76	6.91	654	785
5°	1 +	7°55′	3.82	4.58	436	523	7°43′	3.91	4.70	447	536	7°31′	4.02	4.82	458	550
7°	1½ –	11°06′	2.71	3.25	311	374	10°50′	2.77	3.33	319	383	10°33′	2.85	3.42	328	393
9°30′	2	15°06′	1.97	2.36	230	276	14°44′	2.02	2.42	236	283	14°21′	2.07	2.49	242	290
14°	3	22°27′	1.28	1.54	157	189	21°54′	1.32	1.58	161	193	21°19′	1.36	1.63	165	198

TABLE 81*b*. — ROTATIONS OF TROMMEL TO DELIVER A GRAIN OF OVERSIZE, AND THE HELICAL DISTANCE TRAVELED BY THE GRAIN.

Trommel 48 Inches Diameter.

Slope of Trommel.	15 Revolutions a Minute. Sliding Angle, 40° 3'.					17 Revolutions a Minute. Sliding Angle, 41° 29'.				
	Pitch Angle.	Rotations to Deliver a Grain of Oversize when Length of Trommel is		Helical Distance Traveled by a Grain when Length is		Pitch Angle.	Rotations to Deliver a Grain of Oversize when Length of Trommel is		Helical Distance Traveled by a Grain when Length is	
Degrees.		60 In.	72 In.	60 In.	72 In.		60 In.	72 In.	60 In.	72 In.
2° 0′	3°07′	7 32	8.79	1,106	1,328	3°01′	7.54	9.05	1,139	1,366
2°30′	3°53′	5.86	7.03	885	1,062	3°47′	6.03	7.23	911	1,093
3°30′	5°27′	4.18	5.01	633	758	5°17′	4.30	5.16	651	781
5° 0′	7°47′	2.91	3.49	443	531	7°34′	3.00	3.60	456	547
7° 0′	10°55′	2.06	2.48	317	380	10°36′	2.13	2.55	326	391
9°30′	14°52′	1.50	1.80	234	281	14°26′	1.55	1.86	241	289
14° 0′	22°05′	0.98	1.18	160	192	21°25′	1.01	1.22	164	197

Trommel 72 Inches Diameter.

	12 Revolutions a Minute. Sliding Angle, 39° 51'.					15 Revolutions a Minute. Sliding Angle, 42° 35'.				
2° 0′	3°07′	4.86	5.84	1,102	1,322	2°57′	5.14	6.16	1,164	1,396
2°30′	3°54′	3.89	4.67	881	1,058	3°42′	4.11	4.93	931	1,117
3°30′	5°28′	2.77	3.33	630	756	5°11′	2.93	3.51	665	798
5° 0′	7°49′	1.93	2.32	441	529	7°24′	2.04	2.45	466	559
7° 0′	10°58′	1.37	1.64	316	379	10°23′	1.45	1.74	333	400
9°30′	14°56′	1.00	1.19	233	280	14°07′	1.05	1.27	246	295
14° 0′	22°11′	0.65	0.78	159	191	20°57′	0.69	0.83	168	201

	Trommel 96 Inches Diameter.									
	10 Revolutions a Minute. Sliding Angle, 39° 29′.					12 Revolutions a Minute. Sliding Angle, 41° 28′.				
2° 0′	3°09′	3.62	4.34	1,093	1,312	3°01′	3.77	4.52	1,139	1,366
2°30′	3°56′	2.89	3.47	875	1,050	3°47′	3.01	3.62	911	1,093
3°30′	5°31′	2.06	2.48	625	750	5°17′	2.15	2.58	651	781
5° 0′	7°53′	1.44	1.73	438	525	7°34′	1.50	1.80	456	547
7° 0′	11°03′	1.02	1.22	313	376	10°36′	1.06	1.27	326	391
9°30′	15°03′	0.74	0.89	231	277	14°26′	0.77	0.93	241	289
14° 0′	22°22′	0.48	0.58	158	189	21°26′	0.51	0.61	164	197

It should be stated that where such thin banks as ¼ inch thick are given, it simply means that that is the average depth of continuous layers that would equal in weight the sum of the scattered ore fragments. These tables are based on Tables 81*a* and *b*.

TABLE 82. — CAPACITY IN 24 HOURS OF A TROMMEL 36 INCHES DIAMETER, 72 INCHES LONG, REVOLVING 20 TIMES A MINUTE, FOR GIVEN DEPTHS OF BANK, AND AT DIFFERENT SLOPES; ASSUMING THAT 1 CUBIC FOOT OF BROKEN ORE WEIGHS 94 POUNDS.

Slope of Trommel.		Ore Bank ¼ In. Deep. Trommel Contains 3.91 Pounds of Ore at any time.*	Ore Bank ½ In. Deep. Trommel Contains 11.03 Pounds of Ore at any time.*	Ore Bank 1 In. Deep. Trommel Contains 31.06 Pounds of Ore at any time.*	Ore Bank 2 In. Deep. Trommel Contains 87.14 Pounds of Ore at any time.*
Degrees.	In. per Foot.				
2°	¼+	4.6 tons.	13.1 tons.	36.8 tons.	103.3 tons.
2°30′	½+	5.8 tons.	16.4 tons.	46.1 tons.	129.4 tons.
3°30′	¾—	8.1 tons.	23.0 tons.	64.7 tons.	181.6 tons.
5°	1 +	11.7 tons.	33.0 tons.	92.8 tons.	260.3 tons.
7°	1½—	16.5 tons.	46.4 tons.	130.8 tons.	366.9 tons.
9°30′	2	22.6 tons.	63.8 tons.	179.6 tons.	503.9 tons.
14°	3	34.5 tons.	97.4 tons.	274.4 tons.	769.8 tons.

* Including the undersize.

TABLE 83. — THICKNESS OF BANK AND WEIGHT OF ORE IN TROMMELS 30 AND 36 INCHES DIAMETER, 72 INCHES LONG, REVOLVING 20 TIMES A MINUTE, WITH DIFFERENT RATES OF FEED AND AT DIFFERENT SLOPES; ASSUMING THAT 1 CUBIC FOOT OF BROKEN ORE WEIGHS 94 POUNDS.

Abbreviations.— Deg. = degrees; Ft. = foot; In. = inches; p. = per.

Slope of Trommel.		Trommel 30 Inches Diameter, 72 Inches Long.									
		100 Tons Screened in 24 Hours.		125 Tons Screened in 24 Hours.		150 Tons Screened in 24 Hours.		200 Tons Screened in 24 Hours.		300 Tons Screened in 24 Hours.	
		Depth of Ore Bank.	Ore in Trommel at any time.*	Depth of Ore Bank.	Ore in Trommel at any time.*	Depth of Ore Bank.	Ore in Trommel at any time.*	Depth of Ore Bank.	Ore in Trommel at any time.*	Depth of Ore Bank.	Ore in Trommel at any time.*
Deg.	In. p. Ft.	Inches.	Pounds.	Inches.	Pounds.	Inches.	Pounds.	Inches.	Pounds.	Inches.	Pounds.
2°	¼+	2.31	98.8	2.69	123.5	3.06	148.2	3.73	197.7	4.93	296.5
2°30′	½+	1.99	79.0	2.31	98.8	2.61	118.5	3.20	158.1	4.23	237.1
3°30′	¾—	1.60	56.3	1.85	70.4	2.08	84.5	2.53	112.7	3.35	169.0
5°	1 +	1.25	39.3	1.45	49.1	1.64	58.9	1.99	78.6	2.60	117.9
7°	1½—	0.98	27.8	1.15	34.8	1.30	41.7	1.58	55.7	2.07	83.5
9°30′	2	0.79	20.2	0.93	25.3	1.04	30.3	1.27	40.4	1.67	60.6
14°	3	0.60	13.3	0.69	16.6	0.78	19.9	0.95	26.5	1.26	39.8
		Trommel 36 Inches Diameter, 72 Inches Long.									
2°	¼+	1.96	84.4	2.28	105.5	2.58	126.5	3.12	168.7	4.12	253.1
2°30′	½+	1.69	67.4	1.96	84.2	2.21	101.0	2.69	134.7	3.52	202.1
3°30′	¾—	1.35	48.0	1.57	60.0	1.76	72.0	2.14	96.0	2.81	144.0
5°	1 +	1.05	33.5	1.23	41.8	1.39	50.2	1.68	66.9	2.20	100.4
7°	1½—	0.83	23.7	0.97	29.7	1.10	35.6	1.33	47.5	1.75	71.2
9°30′	2	0.68	17.3	0.78	21.6	0.88	25.9	1.07	34.6	1.42	51.9
14°	3	0.51	11.3	0.58	14.1	0.66	17.0	0.80	22.7	1.06	34.0

* Including the undersize.

§ 344. THE EFFECT OF LENGTH AND SLOPE COMBINED. — Table 84 shows relative weights of ore conveyed by trommels with equal depths of bank in any given time. These quantities are calculated on the basis that 36-inch, 48-inch, 72-inch, and 96-inch trommels contain respectively 1.1, 1.27, 1.56, and 1.80 times as much ore at any given moment as a 30-inch trommel of the same length. These figures are practically true for banks varying from ¼ inch

TABLE 84. — RELATIVE WEIGHTS CONVEYED BY TROMMEL WITH ORE BANKS OF ANY DEFINITE DEPTH UP TO 2 INCHES.

Slope of Trommel.		Trommel 30 Inches Diameter.			Trommel 36 Inches Diameter.			Trommel 48 Inches Diameter.		Trommel 72 Inches Diameter.		Trommel 96 Inches Diameter.	
		Revolutions per Minute.			Revolutions per Minute.			Revolutions per Minute.		Revolutions per Minute.		Revolutions per Minute.	
Deg.	Inches per Ft.	16	18	20	16	18	20	15	17	12	15	10	12
2° 0′	⅜+	3.3	3.7	4.0	4.3	4.8	5.1	6.1	6.8	9.1	10.7	11.7	13.5
2°30′	½+	4.2	4.6	5.0	5.4	5.9	6.4	7.7	8 5	11.4	13.4	14.7	16.9
3°30′	¾−	5.8	6.4	7.0	7.6	8.3	9.0	10.8	11.9	15.9	18.8	20 6	23.7
5° 0′	1 +	8.4	9.2	10.0	10.9	12 0	12.9	15.5	17.0	22.9	27.1	29.5	34.0
7° 0′	1½−	11.8	13.0	14.1	15.4	16.9	18.2	21.8	23.9	32.2	38.1	41.7	48.1
9°30′	2	16.3	17.9	19.4	21.1	23.2	25.1	30 0	32.9	44.2	52 6	57.4	66.2
14° 0′	3	25.0	27.4	29.7	32.5	35.5	38.2	45.9	50.5	67.9	80.0	88.5	100.0

to inches in depth. The greatest error in the table is 0.8%. To eliminate this slight error would require a separate table for each depth. Table 85 shows,

TABLE 85. — RELATIVE LENGTHS OF TROMMEL NECESSARY FOR THE CAPACITIES GIVEN IN TABLE 206.

Slope of Trommel.		Trommel 30 Inches Diameter.			Trommel 36 Inches Diameter.			Trommel 48 Inches Diameter.		Trommel 72 Inches Diameter.		Trommel 96 Inches Diameter.	
		Revolutions per Minute.			Revolutions per Minute.			Revolutions per Minute.		Revolutions per Minute.		Revolutions per Minute.	
Deg.	Inches per Ft.	16	18	20	16	18	20	15	17	12	15	10	12
		Relative Lengths of Trommels.											
2° 0′	⅜+	14.5	14.2	13.9	14.2	13.9	13.5	14.0	13.6	14 1	13.3	14.2	13.6
2°30′	½+	18.1	17.7	17.3	17.8	17.4	16.9	17.5	17.0	17.6	16 6	17.7	17.0
3°30′	¾−	25.3	24.8	24.2	24.9	24.3	23.7	24.5	23.8	24.6	23.3	24.8	23.8
5° 0′	1 +	36.1	35.4	34.6	35.6	34.7	33.8	35.0	34.0	35.1	33.3	35.4	34.0
7° 0′	1½−	50.5	49.4	48.3	49.8	48.6	47.3	48.9	47.5	49.1	46.5	49.5	47.5
9°30′	2	68.3	66.8	65.4	67.4	65.7	64.0	66.2	64.3	66.5	63.0	67.1	64.3
14° 0′	3	100.0	98.1	96.3	98.7	96.3	94 0	96.9	94 5	97.5	92.3	98.1	94.5

for the same diameters and slopes as in Table 84, the relative lengths that will give the same length of helical path in all cases; equal lengths of path being necessary to yield the same quality of screening, provided there is the same depth of bank in each case. Both of these tables are based on Tables 81*a* and *b*. Two examples of their use follow: If the maximum capacity of a trommel 96 inches in diameter, sloping 14°, revolving 12 times per minute, is called 100 units of weight, the same quality of screening will be done by a trommel 36 inches in diameter with the same slope, revolving 20 times per minute, with a capacity of 38.2 units of weight, and the relative lengths would be 94.5 and 94.0, that is to say practically the same length.

If, on the other hand, the 36-inch trommel had sloped 5° instead of 14°, the capacity would be only 12.9 units of weight, but the necessary length would be reduced to 33.8. The capacity is reduced more than the length. In like manner a great variety of conditions may be compared. Capacity cannot

be much increased, however, by increasing length without increasing slope also. For example, if a trommel 5 feet long is screening well to its full capacity, and it is attempted to double the capacity by doubling the length, the first 5 feet will be overcrowded and screening poorly, and the second 5 feet will also be overcrowded and screening poorly; but by doubling the length and at the same time increasing the slope, the capacity can be doubled. (See Tables 84 and 85.) If, however, there is not enough fall to permit an increase of either length or slope, the 2 five-foot lengths may be placed side by side and the ore divided between them.

Practically, the mill man aims, as a rule, not at great quantity but at good quality; and when he seeks this by the 14° slope, he does not try for the enormous capacity that the trommel will give if its helical path is lengthened as above, but rather for the very much thinner bank that the 14° slope will give on the same quantity, in order to give the greatly improved quality of screening that will result. The thin bank does away with the necessity of increasing the length.

§ 345. EFFECT OF SPEED. — Table 84 shows that the capacity is noticeably increased with the speed of revolution. For example: A 36-inch trommel, sloping 5°, making 16 revolutions a minute, screens 10.9 units of weight, while if its revolutions be put up to 20, it will screen 12.9 units. The increased speed, to be sure, increases the centrifugal force, which tends to blind the screen, but the effect of this probably is not serious for a 36-inch trommel until we go beyond 20 revolutions a minute. (See Fig. 159 and paragraph on *Revolutions*.)

§ 346. THE EFFECT OF VARYING THE DIAMETER. — Tables 84 and 85 show that, with the same number of revolutions and the same slope, the capacity of a 36-inch trommel is practically 1.3 times that of a 30-inch trommel of the same length. The centrifugal force, however, is greater in the former, and to make a perfectly fair comparison, the revolutions must be so regulated as to make the centrifugal force the same in the two machines. The depth of bank and the quality of screening will then be the same in both trommels, and the 36-inch will have practically 1.2 times the capacity of the 30-inch trommel; that is to say, the capacities of the two are in proportion to their diameters. In fact, when the lengths and slopes are the same, and the speeds are such as to make the centrifugal force the same, the capacities of any two trommels are practically proportional to their diameters, for the depths of bank under consideration (2 inches or less). The helical distance traveled will be exactly the same for all diameters if the lengths and slopes are alike, so that the wear on screens, per ton of ore, will be the same. The frequency of changing screens will be the same, but the labor of changing, per ton of ore, will be inversely as the diameters. It is clear then that the running expense of a large diameter trommel is no greater and may be even less than that of a small one, per ton of ore treated. On this account, diameters which are much greater than those commonly used have been computed and placed in the table for convenience of mill men who may desire to experiment in this direction. Diameters equal to the largest shown in the tables are sometimes used for coal. It should be stated that the first cost of trommels will increase somewhat more rapidly than the diameters.

§ 347. DEPTH OF BANK AND QUALITY OF WORK depend mainly upon the slope of the trommel, the rate of feeding, and the speed of revolution. If the bank is too deep, good screening cannot be done, no matter how long the trommel is. If the bank is too thin, time is wasted.

At Laurenburg a conical trommel having 8-mm. round holes with 28 inches large diameter, 49 inches perforated length, and 2° 50′ slope, has been replaced by one with 64 inches large diameter, 26 inches perforated length, and 5° 45′ slope run at 6 revolutions per minute. The steeper slope and greater diameter

have both helped to diminish the depth of bank and to improve screening to an extent which warranted shortening the screen. The net result was less wear of screen and less slimes from abrasion of the ore.

The importance of steeper slope and shorter length for a given capacity, does not appear to be perfectly understood. The following figures have been taken to illustrate this point:

Slope of Trommel.	Number of Trommels 36 Inches to 50 Inches Long.	Number of Trommels 60 Inches Long.	Number of Trommels 72 Inches Long.	Number of Trommels 90 Inches to 168 Inches Long.
1° 5′ to 3°55′	7	10	2	25
4° 5′ to 4°45′	2	5	5	5
5° to 5°55′	2	.....	17	.....
7° 5′ to 7°10′	.....	.....	3	4
8°30′	.....	.....	1	.....
9°30′	.....	7	4	.....
14°	1	.....	.....	.....

There are three large entries in this list which appear to indicate that this problem is being worked out by natural selection: 25 very long trommels have from 1° 5′ to 3° 55′ slope; seventeen 6-foot trommels have from 5° to 5° 55′ slope. Seven 5-foot trommels have 9° 30′ slope. Here, throwing out certain odd figures, which may be considered exceptional we have evidence that mill men recognize that if a gentle slope is to be used the trommel must be long, while if a steep slope is used it may be short. If it can be short, it should be, in order to prevent wear of screen and breakage of ore.

It is not an uncommon practice to diminish the slope and increase the length as the size of the ore diminishes. This is done on the basis that the fine sizes are harder to screen and should, therefore, be kept longer in the screen. There seems no reason, however, why a fine size should screen more advantageously at a gentle angle than a coarse size. If, then, steep slopes thin the banks and improve screening for coarse screens, they will also do it for fine. It is probable that short screens, 5 feet long, with somewhere from 9° to 14° slope, will be found so much more efficient for screening, and so much less expensive, that they will be adopted for all sizes, coarse and fine.

§ 348. Mill Screening. — The quality of work done by mill screens will depend upon the conditions under which they are run. If the screen is crowded by too rapid feeding there will be an excess of fines in the oversize. If the trommel has too little slope for its length or too little length for its slope; if it has too small a percentage of opening; if too little water is used to remove adhering fines; or if the holes are partially blinded by the presence of a large percentage of grains about the size of the holes there will in all these cases be large percentages of material in the oversize which should have passed the screen openings. Tests of trommels under actual mill conditions always show considerable percentages of material in the oversize which does not belong there. This, under the best conditions, amounts often to 15%, and cases are on record where as much as 70% of the oversize of a screen has been finer than the screen openings. This fact is often urged in favor of hydraulic classifiers. The fines in the oversize of trommels cause serious losses in the subsequent treatment of the ore.

Laws of Classifying by Settling in Water.

§ 349. Free Settling and Hindered Settling Defined. — In order to intelligently design hydraulic classifiers, box classifiers, settling tanks, and jigs, the laws governing the rate of settling of particles in water must be understood.

There are two conditions of settling of grains that are recognized as distinct from each other and whose laws must be studied independently. They are called falling under free settling conditions and falling under hindered settling conditions.

Free Settling is where individual particles fall freely, either in still water or against an opposing upward current, without being hindered by other particles. The classifiers and settling tanks are instances of this principle.

Hindered settling is where particles of mixed sizes, shapes, and gravities in a crowded mass, yet free to move among themselves, are sorted in a rising current of water, the velocity of which is much less than the free falling velocity of the particles, but yet enough so that the particles are in motion. The arrangement of the particles is so positive that if one of them be moved either upward or downward from its chosen companions, it will be found, when set free, to return immediately to practically the same group as before. The jig beds as well as the hindered-settling classifiers are instances of this principle.

§ 350. FREE SETTLING, GENERAL PRINCIPLES. — The conditions affecting free settling will be first considered. The rate of falling of particles under free settling conditions depends, other things being equal in each case, upon:

(1) *Specific gravity.* — Of two particles having different specific gravities, that having the higher will fall faster than that having the lower.

(2) *Size.* — Of two particles the larger will settle faster in the water than the smaller.

The specific gravity and size have a further effect upon the rate of acceleration of the particles during the time they are acquiring their full velocity, that is, before they reach the point where the friction of the water, plus the force of the rising current, if there be any, balances the force of gravity. This effect is, that of two particles which are equal settling, the smaller particle with higher specific gravity reaches its full velocity quicker than the larger particle with lower specific gravity, or in other words, it has greater acceleration.

(3) *Shape.* — Of particles which just pass through the same screen, the roundish grain settles faster than the long, narrow grain, and the latter settles faster than the flat grain.

(4) *Air bubbles.* — Of two particles, one of which retains adhering air bubbles, while the other does not, the latter will settle more rapidly. Water is sometimes so charged with air that bubbles form upon immersed grains and tend to float them.

(5) *Magnetism.* — Of two groups of particles, one of which is strongly magnetic, while the other is not, the former may form a clot, owing to the mutual attraction of the particles, and fall much more rapidly than the latter in which the particles fall individually.

(6) *Density of Liquids.* — In two liquids of different density, the rate of settling of a particle is more rapid in the lighter liquid. This idea may be carried so far as to have a liquid of a density greater than the specific gravity of the ore particles, and the particles will then float on its surface. Again, there may be particles of two different specific gravities and the density of the liquid lies between them in which case the particles of low specific gravity will float, while those of high will sink, and a separation will be effected thereby, according to the principle of *intermediate density.*

(7) *Viscosity.* — In two liquids of different fluidity, the rate of settling of a particle is more rapid in the more fluid liquid.

§ 351. VELOCITY OF SETTLING UNDER FREE-SETTLING CONDITIONS. — Table 86 gives the average rate of settling of quartz and galena grains of different diameters expressed in millimeters. This table is the result of a long series of experiments.

Discussing these results mathematically from the point of view taken by Rittinger, we have, in Fig. 161, a jar A, with water in it up to B; K, a U-tube with a square section, which we will call D meters square inside section. Upon the lower end is a cube of mineral, E, D meters cube; and within the tube is a column h, of water just high enough to balance the weight of the cube E. Then

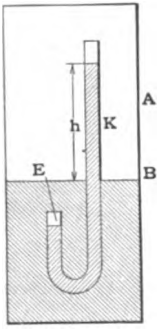

FIG. 161.—COLUMN OF WATER TO SUPPORT A CUBE OF MINERAL.

D is the width of the cube of mineral in meters.

δ is the specific gravity of the mineral, 2.65 for quartz, 7.5 for galena.

h is the column of water to balance the grain.

$h = D(\delta - 1)$.

Rittinger assumes that because a column h meters high balances the weight of a stationary grain, therefore the velocity due to h, if rising, is able to prevent the grain from falling; or, in other words, it is the velocity of the fall of the grain. On this basis he tells us from the formula $V = \sqrt{2gh}$, when $g = 9.8024$ meters, $\sqrt{2g} = 4.42773$ meters, that the velocity V of settling in water of grains of minerals is $V = C\sqrt{D(\delta - 1)}$ where C is a constant.

C = 2.44 for average grains,
2.73 for roundish grains,
2.37 for long grains,
1.92 for flat grains.

Rittinger's C seems to be made up of $f\sqrt{2g}$ where f is a factor due to friction.

In Table 86 the column marked "Computed velocity" is obtained from Rittinger's formula $V = 2g\sqrt{D(\delta - 1)}$, omitting the f. In the column marked "Ratio of computed divided by average," we have a value for f. The value of this factor is practically constant for grains larger than 1.55 millimeters in diameter. For galena it is 0.7558; for quartz 0.6157. But for grains smaller than 1.55 millimeters in diameter the value of f decreases in a most extraordinary degree. This discrepancy between the values shows that Rittinger's universal formula for all minerals is not universal, and that it needs some added factor which will provide for the differences in specific gravity. This may be overcome for practical purposes by simply determining the factors for different specific gravities, as has been done above for quartz and galena.

In Fig. 162 (see page 266) two curves for quartz and galena were drawn from the average diameters and velocities by using logarithms of the numbers instead of the numbers themselves. The abscissae are the logarithms of D, the ordinates are the logarithms of V. The advantage of the logarithmic curve is its compactness and the ease with which the formulas can be derived from it. A curve made from natural numbers would be many feet long.

The curves show at once two things — that they are practically parallel, and that they are divided in the main into two parts.

The points for the smaller grains, which follow one law (the Law of Viscous Resistance), are on a straight line A. The points for the larger grains, which follow another law (the Law of Eddying Resistance), are also on a nearly straight line, B. Between the two lines A and B is the critical or transition space C.

The derivation of the *Law of Viscous Resistance* is as follows:

For the case of a small sphere falling slowly through a viscous fluid, Sir G. G. Stokes has deduced from purely theoretical considerations for the terminal velocity V, of the sphere, the following formula:

TABLE 86. — FREE-SETTLING VELOCITIES OF QUARTZ AND GALENA.

Average Size of Grain in mm.	Average Velocity, mm. per Second.	Computed Velocity, mm. per Second. V.	Ratio Average Divided by Computed f.	Average Size of Grain in mm.	Average Velocity, mm. per Second.	Computed Velocity, mm. per Second. V.	Ratio Average Divided by Computed f.
Quartz Velocities.				Galena Velocities.			
11.93	393	621.5	0.6325	11.93	934	1235	0 7576
10.26	361	576	0.6269	10.26	865	1142	0.7576
8.65	340	532	0.6390	8.65	810	1052	0.7704
7 32	303	487.5	0.6219	7.32	729	968	0.7519
6.41	289	455.2	0.6349	6.41	680	906	0.7512
5.46	260	421	0.6173	5.46	631	836	0.7547
4.58	240	385	0.6242	4.58	558	765	0.7299
4.17	225	368	0.6116	4.17	538	731	0 7253
3.48	209	338.2	0.6179	3.48	513	671	0.7634
2.83	191	303	0.6305	2.83	450	607	0.7407
2.44	168	280.5	0.5988	2.44	420	557	0.7535
2.28	166.7	272	0.6135	2.28	442	539.5	0.8197
1.85	146.6	244.5	0.5988	1.85	370	486	0.7622
1.55	126.6	224.8	0.5634	1.55	330.5	445	0.7435
1.37	118.4	218.2	0.5435	1.37	295.1	418	0.7067
1.19	105.6	210.5	0.5082	1.19	270.1	390	0.6935
1.04	94.5	203.5	0.4604	1.04	252.5	364	0.6944
0.91	84.1	171.7	0 4902	0.91	227.5	341.	0.6667
0.76	76.7	157	0.4890	0.76	207.8	311.5	0.6667
0.63	67.2	146	0.4608	0.63	192.8	283.5	0.6788
0.51	52.7	129	0.4090	0.51	160.4	255	0.6329
0.41	41.2	115.2	0.3571	0.41	126.1	229	0.5495
0.32	31.9	101.7	0.3135	0.32	103.1	202	0.5102
0.369	41.67	109.5	0.3802	0.345	125	209.5	0.5970
0.305	34.48	99.5	0.4202	0.279	111.1	189	0.5882
0.234	28.57	87.1	0.3279	0.215	88.5	165.8	0.5344
0.199	24.39	80.4	0.3030	0.160	74.6	145.5	0.5128
0.182	20.41	77.0	0.2653	0.127	62.9	127.2	0.4717
0.156	17.24	71.1	0.2427	0.106	52.6	116.2	0.4717
0.135	14.49	66.1	0.2193	0.0967	43.5	111	0.3922
0.126	12.05	64.0	0.1883	0.0839	37.0	103.5	0.3571
0.121	10.20	62.7	0.1626	0.0798	31.3	100.1	0.3125
0.116	8.55	61.3	0.1395	0.0714	26.3	95.2	0.2762
0.112	7.14	60.3	0.1183	0.0667	22.2	92.3	0.2404
0 0912	6.02	54.4	0.1111	0.0599	18.5	87.9	0.2105
0.0846	5.05	52.4	0.0904	0.0572	15.6	85.6	0.1821
0.0800	4.26	50.9	0.0840	0.0535	13.0	82.6	0.1575
0.0747	3.57	49.3	0.0725	0.0484	11.0	78.4	0.1403
0.0689	3.00	47.3	0.0635	0.0437	9.26	74.6	0.1241
0 0629	2.52	45.1	0.0558	0.0419	7.75	73.1	0.1059
0.0555	2.12	42.4	0.0500	0.0401	6.49	71.6	0.0906
0.0503	1.78	40.4	0.0441	0.0390	5.46	70.6	0.0774
0.0478	1.50	39.4	0.0380	0.0354	4.59	67.2	0.0683
0.0425	1.26	37.1	0.0340	0.0311	3.86	62.9	0.0614
0.0377	1.06	35	0.0303	0.0284	3.25	60.2	0.0541
0.0344	0.887	33.4	0.0265	0 0259	2.72	57.6	0.0473
0.0319	0.746	32.1	0.0230	0.0235	2.29	55.4	0.0413
0.0282	0.627	30.25	0.0207	0.0219	1.92	53.0	0.0362
0.0267	0.526	29.45	0.0179	0.0205	1.61	51.7	0.0312
0.0253	0.442	28.6	0.0155	0.0193	1.36	49.6	0.0274
0.0232	0.372	27.4	0.0136	0.0176	1.14	47.4	0.0241
0.0209	0.313	26.05	0.0120	0.0160	0.959	45.2	0.0212
0.0188	0.262	24.7	0.0106	0.0149	0.806	43.6	0.0185
0.0182	0.220	24.3	0.00905	0.0141	0.676	42.4	0.0159
0.0161	0.185	22.85	0.00810	0.0134	0.568	41.4	0.0137
0.0144	0.156	21.6	0.00723	0.0128	0.478	40.5	0.0118
0.0126	0.131	20.1	0.00709	0.0112	0.401	37.8	0.0106
0.00884	0.110	16.91	0.00649	0.00956	0.337	34.95	0.00965
0.00589	0.0924	13.81	0.00668	0.00790	0.283	31.8	0.00890
.....	.....	.....	.....	0.00700	0.238	29.9	0.00797
.....	.....	.....	.....	0.00593	0.200	27.5	0.00727
.....	.....	.....	.....	0.00493	0.168	25.1	0.00670
.....	.....	.....	.....	0.00431	0.141	23.42	0.00597
.....	.....	.....	.....	0 00330	0.118	20.52	0.00575
.....	.....	.....	.....	0.00152	0.0995	13.91	0.00715

$$V = \frac{2}{9} g \left(\frac{\delta - \delta'}{n}\right) r^2$$

where r = radius of the sphere,
g = acceleration due to gravity,
δ = density of the sphere,
δ' = density of the fluid,
n = the co-efficient of viscosity or "inner friction".

of the fluid, the quantities all being expressed in c-g-s. (centimeter-gram-second) units.

For water at 20° C., $\delta' = 1$, and $n = 0.010$; hence the formula would become

$$V = K\ (\delta - 1)\ D^2,$$

where the constant K should theoretically be the same (about 550) for particles of all densities; but since it involves n, it would change about 2% per degree for temperatures different from 20° C.

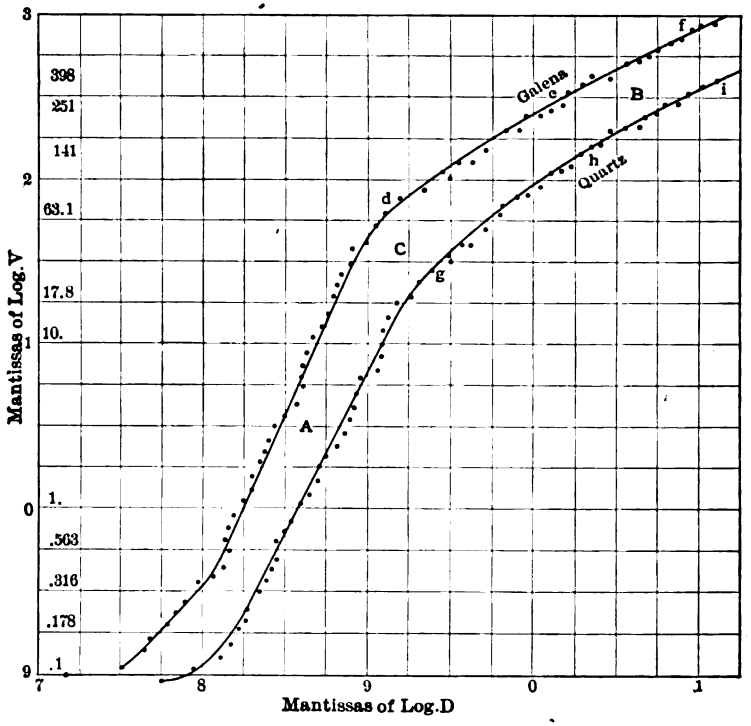

FIG. 162. — LOGARITHMIC CURVES OF AVERAGE VELOCITIES AND DIAMETERS OF THE COMPLETE SERIES.

If V and D are taken in millimeters instead of V and r in centimeters, the formula becomes, by substituting known quantities,

$$\left(\frac{V}{10}\right) = \frac{2}{9}\ 0.981\ \left(\frac{\delta - 1}{0.01}\right)\ \left(\frac{D}{2 \times 10}\right)^2,$$

or,

$$V = 545\ (\delta - 1)\ D^2$$

For a given substance $(\delta - 1)$ would also be constant; so we should expect to find that the velocity of settling would be simply a constant times the square of the diameter of the particle, or

$$V = K'\ D^2, \text{ where } K' = K\ (\delta - 1),$$

or taking logarithms, we have

$$\log.\ V = \log.\ K' + 2\ \log.\ D.$$

That such a simple law is followed closely by both quartz and galena is shown very clearly by reference to the logarithmic plots, Fig. 162. The points on the lines A lie very strikingly on a straight line, whose slope is nearly 2: 1; that is, log. V is increasing just twice as rapidly as log. D, as it should, according to the formula above. The value of log. K' is the intercept on the V axis (that is, the value of log. V when log. $D = O$), from which we get readily the values for K' — namely, 700 for quartz and 4,100 for galena. The corresponding values for K in formula (A) would be

$$K = \frac{700}{(2.65 - 1)} = 424 \text{ for quartz,}$$

$$\text{and } K = \frac{4100}{(7.5 - 1)} = 631 \text{ for galena,}$$

values which differ considerably, it is true, but which lie on either side of the theoretical value of 550.

The derivation of the *Law of Eddying Resistance* is as follows: Stoke's equation is derived on the assumption of small velocity and a resistance due entirely to viscosity proper, and it is known not to hold above a certain "critical velocity" when the resistance due to eddying motion set up in the fluid becomes appreciable and important. For such high velocities a complete theory seems to be almost impossible; but Sir Isaac Newton pointed out that the resistance might be expected to vary as the square of the velocity. In other words, $R = k\ V^2$ where R is the resistance to motion, and k is a constant. Evidently when dynamic equilibrium is attained R is just equal to the effective weight of the particle in the liquid. The effective weight has been shown above to be $D\ (\delta - 1)$. Substituting this value $D\ (\delta - 1)$ for R in the equation above, we have

$$D\ (\delta - 1) = kV^2$$

from which we get, by extracting the square root, Rittinger's formula:

$$V = C\sqrt{D\ (\delta - 1)}$$

(using C outside the radical in place of $\frac{1}{k}$ inside).

We should expect this to hold only when Newton's law of resistance is followed, and the results indicate that this is more nearly true the greater the velocity; that is, when the true viscous resistance plays a continuously less important part, and the eddying resistance an increasingly important part.

The existence of the "critical velocity" and the transition from the Law of Viscous Resistance (A) to the very different *Law of Eddying Resistance* (B) is strikingly shown on the plot by the decided change in the slope of the lines for both quartz and galena between the lines A and B. Actually the slope for both quartz and galena does become about ½ from e to f and from h to i. The formulas thus indicated are: for quartz, $V = 113\ \sqrt{D}$, and for galena, $V = 250\sqrt{D}$. (The data would be represented over a somewhat larger range, g to i and d to f, by the formulas $V = 89\ D^{0.67}$, for quartz, and $V = 240\ D^{0.75}$, for galena).

Bringing in the specific gravities (in other words, finding C for the Rittinger formula), would change these two expressions into $V = 87\sqrt{(\delta - 1)}\ D$, for quartz, and $V = 100\sqrt{(\delta - 1)}\ D$, for galena. (The constants 87 and 100 would correspond to 2.7 and 3.2 in Rittinger's formula, when V and D are expressed in meters instead of in millimeters).

We see again a distinct individuality in the constants for the two substances.

The critical velocities are apparently about 63 millimeters a second for galena and 28 millimeters for quartz, and the corresponding critical diameters are about 0.13 millimeter for galena and 0.20 for quartz. Of course, in this neighborhood, neither of the derived formulas will apply very closely. Owing to the decided change here, a simple formula to cover the entire range seems quite out of the question.

It will be noticed that the four or five observations on the smallest galena particles lie a little off the line A, as do also two observations on quartz. It is difficult to see why these cases should deviate from Stoke's law, unless the already very slow settling of the particles is made apparently still slower by slight currents in the water, due to temperature changes, which would be almost unavoidable outside of a well-regulated thermostat or chamber supplied with means of maintaining a constant temperature. An empirical formula could be made to fit these few observations, but it seems hardly necessary. In fact, the values of the velocity over the whole range can be read off from the plot as accurately and more readily than they could be computed from the formulas.

§ 352. SUMMARY. — The above discussion of the experiments thus indicates that two quite different laws are followed by settling particles, depending on whether the velocity is above or below a certain transition or critical point. Below this critical velocity the law is expressed by the formula:

$$V = K\,(\delta - 1)\,D^2 \qquad (A)$$

and above this critical velocity the law is expressed by the formula of Rittinger,

$$V = C\sqrt{D\,(\delta - 1)}. \qquad (B)$$

The values of K indicated by the experimental data are 424 for quartz and 631 for galena; and the values for C are 87 for quartz and 100 for galena.

§ 353. FREE-SETTLING RATIOS. — Table 87 is given for the purpose of showing the manner in which the free-settling ratio of quartz and galena varies with the different sizes. The average free-settling ratio for quartz and galena is 3.9 to 1. A point of especial interest is the marked drop in the ratio when we pass below the so-called critical point, 0.2 millimeter in the case of quartz and 0.13 in the case of galena. From the formulas of § 352 the average ratio above the critical point is 5.23 to 1, and below the critical point 2.43 to 1. Here we note a very close agreement between the theoretical values and those obtained by experiment.

§ 354. THEORETICAL VALUE FOR HINDERED-SETTLING RATIO. — It has been shown that the velocity of mineral grains under free-settling conditions is given by Rittinger's formula $V = C\sqrt{D\,(\delta - 1)}$ where $C = 87$ in the case of quartz, or 100 in the case of galena. We may write this formula $V = C\sqrt{D\,(\delta - L)}$ where L equals the specific gravity of the medium in which settling takes place; 1 in the case of water. As we pass from free settling to hindered settling, it is very evident that there is no dividing line, upon one side of which grains are obeying the laws of free settling, and upon the other the laws of hindered settling. The average specific gravity of the sand and water in the sorting column or quicksand column will always vary as the amount of sand varies. It is, therefore, only natural that in the case of hindered settling we should place L equal to the average specific gravity of the material in the sorting column. This, under the usual conditions, has been experimentally determined as 1.5 where the bulk of the sand in the sorting column is quartz. The hindered-

settling velocities of quartz and galena may now be determined as follows, applying Rittinger's formula with the proper co-efficients.

TABLE 87. — DIAMETERS, VELOCITIES, AND FREE-SETTLING RATIOS OF QUARTZ AND GALENA.

Velocity mm. Second.	Diameter Average Quartz Grain. Millimeters.	Diameter Average Galena Grain. Millimeters.	Ratio Diameter Quartz Diameter Galena.
393	11.93	1.99	5.995
361	10.26	1.78	5.764
340	8.65	1.62	5.340
303	7.32	1.41	5.191
289	6.41	1.33	4.820
260	5.46	1.10	4.963
240	4.58	0.98	4.673
225	4.17	0.89	4.686
209	3.48	0.77	4.519
191	2.83	0.63	4.492
166.7	2.28	0.533	4.278
146.6	1.85	0.470	3.936
126.6	1.55	0.410	3.780
118.4	1.37	0.314	4.360
105.6	1.19	0.263	4.525
94.5	1.04	0.231	4.502
84.1	0.91	0.198	4.596
76.7	0.76	0.161	4.720
67.2	0.63	0.139	4.533
52.7	0.51	0.106	4.812
41.2	0.41	0.0921	4.452
31.9	0.32	0.0802	3.991
28.57	0.234	0.0752	3.258
24.39	0.199	0.0692	2.876
20.41	0.182	0.0634	2.870
17.24	0.156	0.0587	2.658
14.49	0.135	0.0545	2.477
12.05	0.126	0.0509	2.475
10.20	0.121	0.0446	2.713
8.55	0.116	0.0429	2.704
7.14	0.112	0.0411	2.725
6.02	0.0912	0.0396	2.303
5.05	0.0846	0.0374	2.262
4.26	0.0800	0.0335	2.388
3.57	0.0747	0.0305	2.449
3.00	0.0689	0.0272	2.533
2.52	0.0629	0.0242	2.599
2.12	0.0555	0.0228	2.434
1.78	0.0503	0.0213	2.361
1.50	0.0478	0.0200	2.390
1.26	0.0425	0.0186	2.285
1.06	0.0377	0.0169	2.231
0.887	0.0344	0.0155	2.219
0.746	0.0319	0.0145	2.200
0.627	0.0282	0.0138	2.044
0.526	0.0267	0.0131	2.038
0.442	0.0253	0.0121	2.091
0.372	0.0232	0.0105	2.210
0.313	0.0209	0.00882	2.370
0.262	0.0188	0.00747	2.517
0.220	0.0182	0.00702	2.593
0.185	0.0161	0.00546	2.948
0.156	0.0144	0.00465	3.097
0.131	0.0126	0.00389	3.256
0.110	0.00884	0.00253	3.494
0.0924	0.00589	.....	.....

$$Vq = 87\sqrt{Dq\ (2.64 - 1.50)}$$
$$Vg = 100\sqrt{Dg\ (7.50 - 1.50)}$$

Equating velocities we get

$$87\sqrt{Dq\ (2.64 - 1.50)} = 100\sqrt{Dg\ (7.50 - 1.50)}$$

or the hindered-settling ratio

$$\frac{Dq}{Dg} = \frac{60{,}000}{8{,}628.66} \text{ or } \frac{6.95}{1}, \text{ which, as will be seen,}$$

agrees very closely with the latest determinations made by the author. This value is not in reality a constant, but remains fairly constant until we come to the fine sizes, particularly sizes smaller than 0.2 millimeter. Below this size the ratio may be obtained from the formula $V = K(\delta - L)D^2$, using the proper co-efficients, for which see § 352. The values obtained from this latter formula are rather smaller than those obtained in practice. V in either case gives the average interstitial velocity.

§ 355. TUBULAR CLASSIFIER TESTS ON HINDERED SETTLING. — The author has made tests to determine experimentally the hindered-settling ratios of quartz and galena. The apparatus used for these tests is shown in Fig. 163. It consists of a tin cone *a*, with an overflow *f*, united to a tube of glass *b*, by a rubber connector *c*, and having a water supply *d*, regulated by the cock *g*, and a bulb *e*, joined by a rubber connector *h*. If this apparatus be filled with water, and a sample of mixed sands which has passed a 2-mm. screen be charged gradually at the top and a slight upward current of water be admitted through the tube *d*, the sands rapidly assume a condition of approximate equilibrium. Here we have sands of two different specific gravities ranging in sizes from 2 mm. to 0, which are held in gently moving suspension by the slow upward current, and in a crowded condition, so much so that the volume of sand in the tube at any given time is nearly, if not quite, equal to the volume of water. The tube used in the test was 6 feet long and the bulb was of 25 cubic centimeters capacity. After the quartz and galena had been fed time was allowed for the grains to come to equilibrium. At the end of an hour and a half while the sands were still in gently moving suspension the current was slackened by means of the cock *g*, and the heavier grains allowed to settle into the bulb *e*. When the bulb was full it was replaced with another previously filled with water and so on for successive bulbs. Forty-five drawings in all were made. These were dried and then sized by means of a series of sieves, the products on the successive sieves being finally laid out in Fig. 164. From an analysis of the products and knowing the weights the size of the average grain of quartz and galena in each product was computed. The average ratio obtained in the test was 6.9 : 1 as quartz is to galena. This agrees as will be seen with the theory of the preceding article.

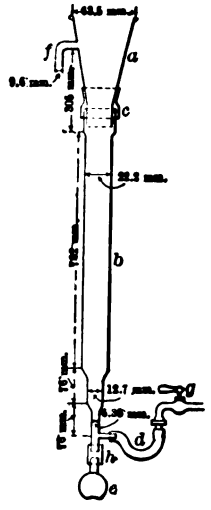

FIG. 163. — TUBULAR CLASSIFIER.

Below are given the actual ratios contained in a number of the drawings or spigots.

Spigot.	Ratio.	Spigot.	Ratio.
16	6.03	26	6.39
17	6.11	27	8.00
18	6.07	28	6.60
19	6.73	29	7.36
20	7.22	30	6.24
21	6.93	31	6.30
22	6.95	32	6.95
23	6.93	33	6.75
24	7.50	34	6.97
25	6.91	35	5.88
.....	.....	36	6.12

In calculating the average hindered-settling ratio it is of course necessary to leave out of consideration spigots 1 to 12 which are pure galena. The spigots 12 to 16 are omitted in order that the classifier may have time to get into good

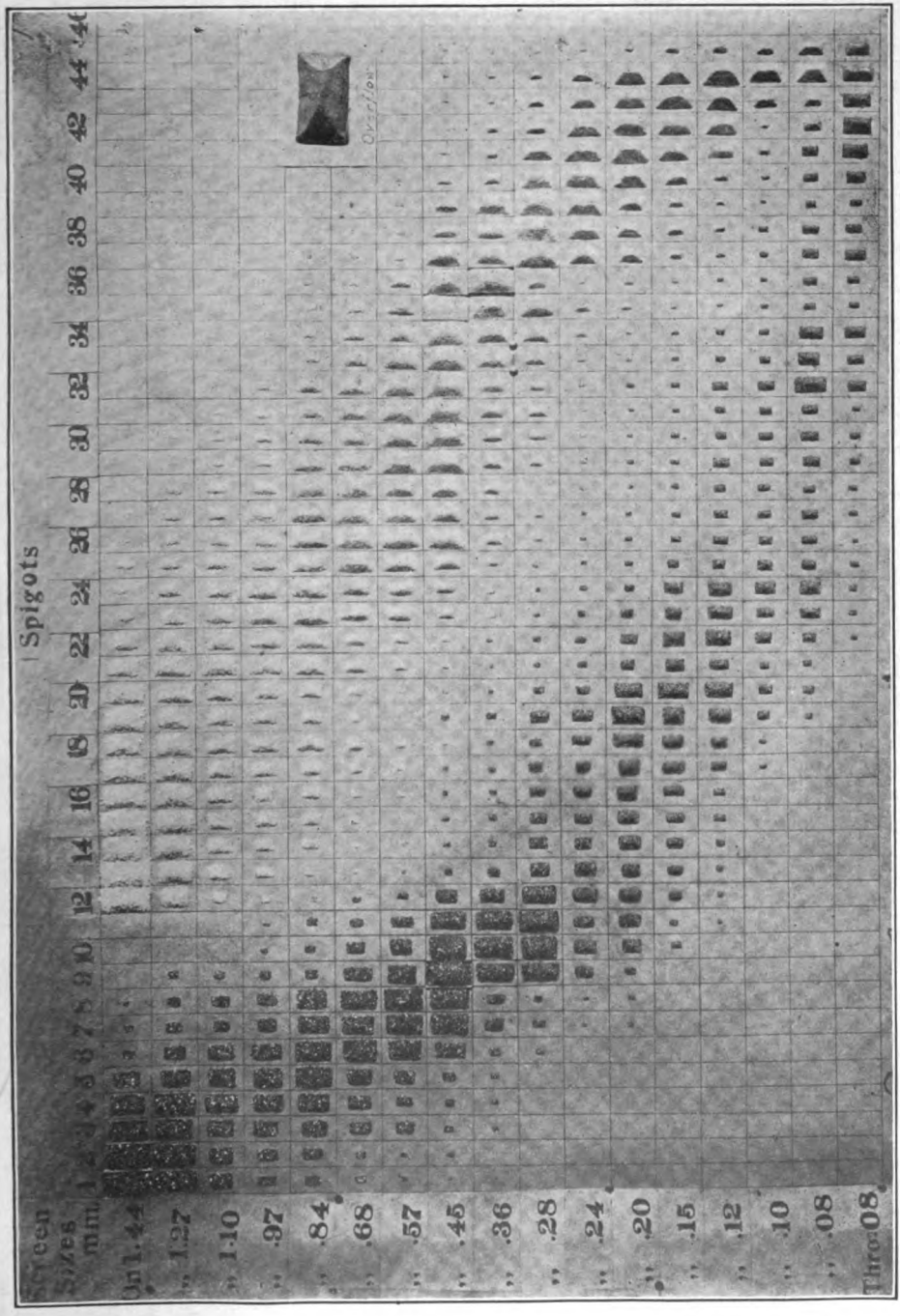

FIG. 164. — SEPARATION OF QUARTZ AND GALENA BY HINDERED-SETTLING CLASSIFIER AND SIEVES.

working condition. The last spigots 37 to 45, are also omitted since they do not show sufficiently the hindered-settling characteristics. The value for the ratio, *i.e.*, 6.9: 1, is then obtained by taking the weighted mean.

Fig. 164 shows a photograph of this run. In the cut the particular points of interest are, first, the range of clean quartz hills occupying the upper right-hand corner of the illustration; second, the range of clean galena hills occupying the lower left-hand corner; and third, the valley between these two ranges. This valley, almost destitute of grains, is made up of mixed heaps containing both quartz and galena. If one were to compare this illustration with a similar one obtained under free-settling conditions, the true significance of hindered-settling would at once be apparent. In the case of free settling we should see a much greater number of mixed heaps, particularly in the later bulbs. The valley also would be much less apparent. In other words, hindered-settling conditions result in a very considerable increase in the ratio existing between the diameter of the average grain of quartz or light mineral and the diameter of the average grain of galena or heavy mineral. In order that hindered-settling conditions may obtain, a quicksand column must be maintained in which the mineral grains are able to move up or down freely, and at the same time the discharge below must be free. This brings up the question of designing a hindered-settling classifier so as to realize the above conditions. This question will be treated later, and before discussing the matter further something needs to be said as to the velocity of rising current necessary to realize hindered-settling conditions; that is to say, the rising current necessary to keep the grains in condition of full teeter.

§ 356. FULL-TEETER VELOCITIES OF QUARTZ AND GALENA. — The objects of the test about to be described were, first, to determine the velocity of rising current necessary to keep a definite volume of grains of known size in a state of full teeter, and second, to determine the ratio between this velocity and the free-settling velocity of grains of the same size, this latter fact being of value in designing a hindered-settling classifier, as will be shown later on.

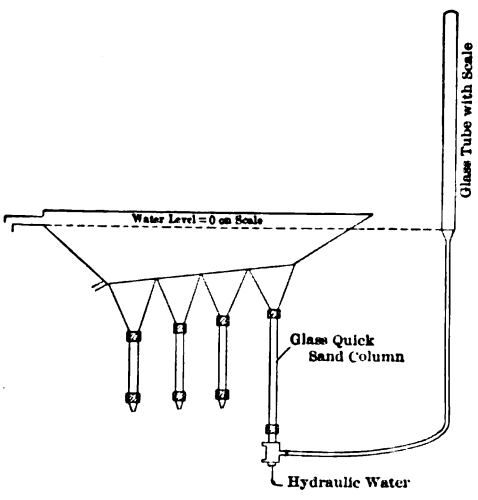

FIG. 165. — HINDERED-SETTLING CLASSIFIER AS ARRANGED FOR FULL TEETER TEST.

The apparatus was arranged as shown in Fig. 165. A definite amount of pure quartz or pure galena which had been carefully sized and its volume accurately determined was introduced into the first sorting column of the classifier arranged as shown, and several observations were made. 1. With the material quiet in the tube, the length of the tube necessary to contain the material was measured. 2. Material just not teetering; — measuring the length of tube now filled by the material, the reading of the water column which was used to measure the pressure of the rising current, and the number of seconds necessary to obtain one liter of overflow. The latter measurement was for the purpose of determining the rising current in millimeters per second. 3. Material in full teeter. Same observations as in 2. From these observations the data given in Table 88 are derived.

TABLE 88. — FULL-TEETER VELOCITIES OF QUARTZ AND GALENA.

Size on mm.	Average Size mm.	Area Tube Inside. Square mm.	Velocity mm. Sec. Full Teeter.	Velocity Free Settling.	Ratio Free to Hindered Settling.
		Quartz Velocities.			
2.83	.....	.....	.....	.....	.....
2.49	2.66	490.87	72.8	181	2.48
2.06	2.28	572.56	72.8	167	2.29
1.63	1.85	"	61.5	147	2.39
1.46	1.55	"	60.3	127	2.10
1.27	1.37	"	53.3	118	2.21
1.10	1.19	"	42.6	106	2.49
0.97	1.04	"	36.4	95	2.61
0.84	0.91	"	33.0	84	2.55
0.68	0.76	"	28.1	77	2.74
0.57	0.60	"	24.6	67	2.72
0.45	0.51	"	19.86	53	2.67
0.36	0.41	"	14.41	41	2.84
0.28	0.32	"	10.19	32	3.14
0.24	0.26	615.75	7.28	30	4.12
0.20	0.22	"	6.11	26	4.25
0.15	0.175	"	5.22	19	3.64
0.119	.....	.....	.....	.....	.....
		Galena Velocities.			
2.83	.....	.....	.....	.....	.....
2.49	2.66	490.87	177.2	437	2.46
2.06	2.28	"	181.0	442	2.44
1.63	1.85	572.56	116.5	370	3.17
1.46	1.55	"	100.4	331	3.30
1.27	1.37	"	97.1	295	3.03
1.10	1.19	615.75	72.0	270	3.75
0.97	1.04	"	66.1	253	3.83
0.84	0.91	"	65.0	228	3.52
0.68	0.76	"	59.8	208	3.48
0.57	0.60	"	47.8	193	4.03
0.45	0.51	"	44.9	160	3.57
0.36	0.41	"	45.7	126	2.75
0.28	0.32	"	42.6	103	2.42
0.24	0.26	"	30.8	104	3.37
0.20	0.22	"	30.5	89	2.91
0.15	0.175	"	19.5	80	4.10
0.119	0.135	"	15.05	66	4.38

The reader should not get the idea that the velocities given in Table 88 as full-teeter velocities are something separate and distinct from free-settling velocities. They are not. These velocities are merely the velocities of the rising water currents in the sorting column at a time when there is no sand in the column. The moment hindered-settling conditions are reached and the grains are in a state of full teeter, we have a new condition of affairs to take into consideration. A large part of the area of the sorting column is now occupied by sand and the actual velocities of the water currents in the interstitial spaces are much greater than is indicated by the so-called full-teeter velocities. In fact the actual velocities may momentarily equal the free-settling velocities. These actual velocities may be computed from the formula $V = C\sqrt{D\,(\delta - L)}$ or determined by experiment. The whole matter comes down to this: a rising current that is totally unable to lift a single grain of given size is able to keep in condition of full teeter a considerable mass of grains of the same size and weight. The application of this work to the designing of a classifier we shall take up in another article.

§ 357. FREE SETTLING VERSUS HINDERED SETTLING. — As has been indicated heretofore, the essential difference existing between a product classified under hindered-settling conditions and one classified under free-settling conditions is the higher ratio between the average diameters of the lighter and heavier minerals in the case of hindered settling. High ratios do not, however,

mean hindered settling or even good classification. It is possible, by overfeeding a free-settling classifier, to throw large grains of light mineral that should go into the first spigot, into the later spigots and thus obtain high ratios. If such a product be screened and the various sizes spread out as in Fig. 164, no valley will be found to exist or at best only slight evidences of such a valley. A product of this sort is not well suited for further treatment. The true hindered-settling product, on the other hand, shows not only the high ratio, but if screened and laid out as in the above-mentioned cut, shows very distinctly the characteristic valley. In the free-settling classifier there is a great tendency for fine particles of the light mineral to be carried down mechanically into an earlier spigot than that in which they really belong. This holds true to a considerable extent even in the most perfect classifiers and under the best conditions obtainable in the laboratory. In the case of the hindered-settling classifier, however, the fact that the grains are kept in a state of agitation in the quicksand column, constantly colliding with neighboring grains and teetering up and down tends to break up any such couples and allow each grain to take its proper position. The smaller grains of light mineral then have an opportunity to pass over into the next pocket and so on until they reach their destination. This fact alone is capable of accounting for the higher ratios obtained in hindered settling and the better classified product.

§ 358. APPLICATION TO CLASSIFIER DESIGN. — In designing a classifier the problem arises of how much hydraulic water per minute is required to give the desired rising current or, to look at the matter from another point of view, given that grains of certain specified sizes are wanted in the spigot product, what shall the rising current be and how much water is required? At the start, it should be stated that it is the author's practice to design the classifier for the light mineral, allowing the heavy mineral to take care of itself as it will always do. Suppose then that we have a product crushed through 2 millimeters and wish to have in the first spigot grains from 2 millimeters to 1 millimeter, taking into consideration the quartz or light mineral alone. The required rising current may be obtained from Table 157 or from the formula $V = C\sqrt{D\,(\delta - 1)}$ where V is the required velocity in millimeters per second, C is a constant equal to 87 for quartz, D equals diameter in millimeters, or 1.0 in the above case, and δ equals specific gravity of the mineral, 2.64 in the case of quartz. In the case of quartz this formula may be simplified to $V = 111.36\sqrt{D}$. This formula holds approximately true down to grains 0.2 of a millimeter in diameter; from 0.2 millimeter down the formula for quartz becomes $V = 695.36\,D^2$.

From the table the required velocity would be found to be 91.3 millimeters per second, or from the formula $V = 111.36\sqrt{D}$, V would be found to be 111.36 millimeters per second, which would not be excessive. The figures taken from Table 157 should be given the preference in all cases when they are available.

Given now from other considerations, explained in the preceding chapter, the size of the sorting column, its area is obtained in square millimeters, and the product of this area and the velocity in millimeters per second gives the cubic millimeters of hydraulic water per second. This can easily be computed to gallons per minute or cubic feet per minute as required. In case of classifiers running with open spigot, a quantity of water must be used in excess of this sufficient to make up for that discharged through the spigot.

It will be noted that the author uses as the rising current the free-settling velocity of the smallest quartz or light mineral grain which it is desirable to have in the spigot. The actual rate of settlement thus becomes 62.3 millimeters per second in the case of the 2-millimeter grain of quartz. Thus the average actual rate of settling considering the quartz grains alone is 31.1 milli-

meters per second. This plan has been used successfully for a number of years, and sizing tests of the products show that it yields practically 90% of grains coarser than the desired size.

When computing the area of the sorting column for a classifier as explained in line 9 of the Key to the computation of the four-spigot vortex classifier it has been the author's custom to divide the cubic millimeters of water and sand per minute by the desired current in millimeters per minute and thus obtain the area in square millimeters. There is a slight error involved in this method, inasmuch as the sand does not settle at the same rate at which the water is rising. If this were taken into account, the resulting area would be slightly larger or smaller than the area computed in the above-mentioned manner. It seems, however, to be near enough for all practical purposes since we assume tonnages at the start which vary to a greater or less extent when the classifier is in operation.

When we come to the hindered-settling classifier (see § 317) the only difference that arises is that instead of taking into consideration the area of the quicksand column, only the sorting column below is taken into consideration and is figured exactly as in the case of free settling. In designing a hindered-settling classifier the ratio existing between the area of the sorting column and the area of the quicksand chamber is of great importance. The figures given in the last column of Table 88 are of interest at this point, and up to date the author has found no better figures to use in determining this ratio. In the case of a four-spigot classifier the ratios between the area of the sorting columns and the area of the quicksand columns are accordingly made 2.5 for the coarsest spigot, 3 for the next, 3.5 for the third, and 4 for the last. Where very fine material is being treated the latter ratio may need to be increased. If the ratio between the area of the quicksand column and the sorting column is too large we have full teeter but no discharge. If the areas are properly proportioned as above we get full teeter and full discharge, which are the ideal conditions for a hindered-settling classifier. If the ratio is made too small we have full discharge and free-settling conditions in the sorting column.

§ 359. EXTENT OF CLASSIFICATION. — It is obviously impracticable to employ in a mill a classifier with a great number of spigots. On the other hand the author does not advise using a classifier that yields less than six spigots when classifying material for treatment on the Wilfley or other concentrating tables. The extraordinary results shown in Fig. 164 are due to the fact that the material has been separated into forty-five separate groups of particles equal settling under hindered-settling conditions. If, now, we group these 45 spigots into six groups we may get the equivalent of six-spigot hindered-settling classifier. We will group the spigots as follows:

Spigots	1 to 11	inclusive	= Spigot	1
"	12 to 22	"	= "	2
"	23 to 32	"	= "	3
"	33 to 36	"	= "	4
"	37 to 41	"	= "	5
"	42 to 45	"	= "	6

If we look at Fig. 164 in the light of this we shall see that the valley, so characteristic of hindered settling, still remains. Spigot number one is composed of nearly clean galena, but the remainder of the spigots, with the exception of the sixth, show the valley and are ideal products for table work. If we compare this with Fig. 166, which represents the work done by a twelve-

spigot free-settling classifier, we at once see that it is impossible to make any grouping of the 12 spigots that will give 6 spigots showing the characteristics exhibited in Fig. 164. The fact that the first spigot is not a truly classified

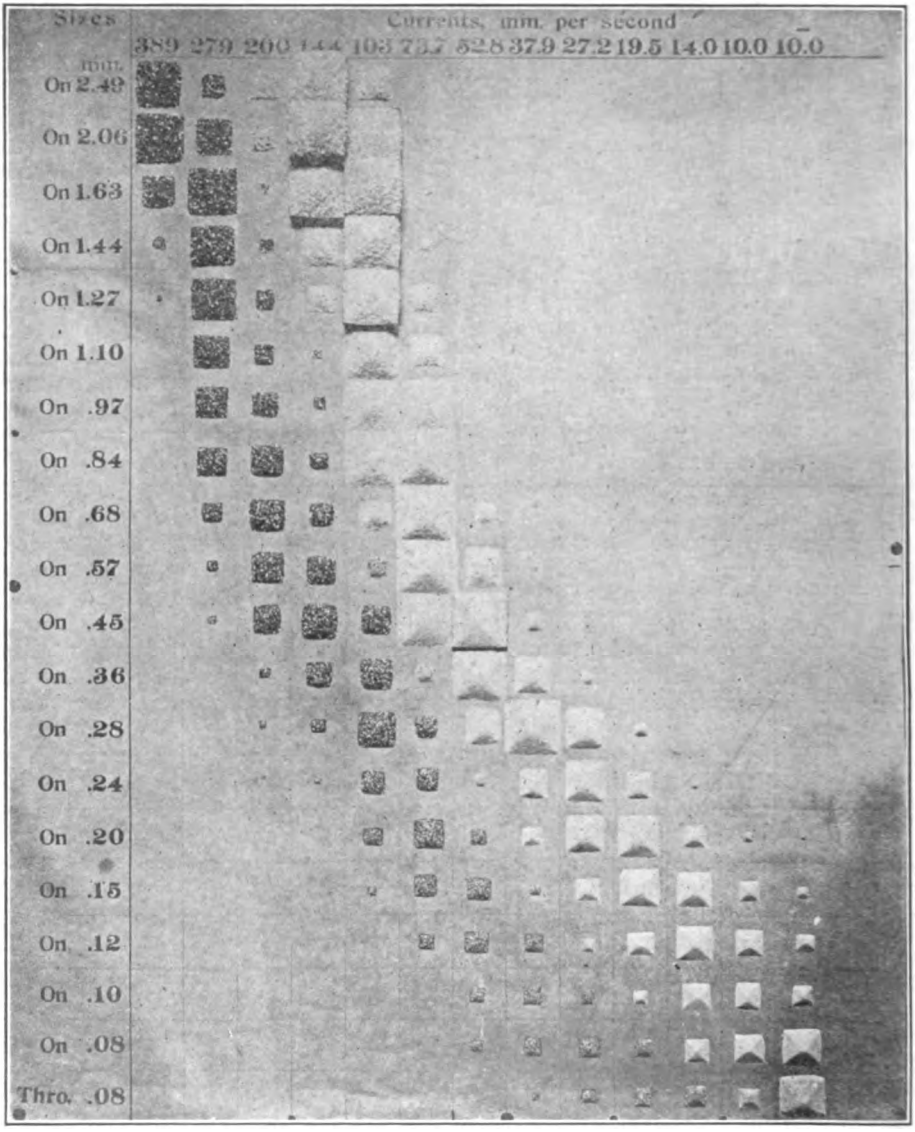

FIG. 166 — SEPARATION OF QUARTZ AND GALENA BY FREE-SETTLING CLASSIFIER AND SIEVES.

product and that the last spigot is not altogether satisfactory, makes it desirable to use as many spigots as is practicable in order that the advantages of a properly classified feed may be realized as fully as possible.

CHAPTER XI.

COARSE SAND CONCENTRATING.

§ 360. PRINCIPLE, PURPOSE, AND DEFINITIONS. — The work of hydraulic jigs depends, as a rule, upon the action of two currents of water, an upward and a downward, alternating with each other in quick succession, upon a bed of sand supported by a screen. Sands of two or more specific gravities, during the upward movement, called pulsion, arrange themselves according to the law of hindered settling. During the downward movement, called suction, small grains wherever they are free to do so, move downward through the interstices between the large grains. In continuous jigs there is generally also a surface carrying current which serves to transport the lighter grains forward until they are discharged over the tail; sometimes this is done by a mechanical device.

The machines to be described under this heading are of two classes; jigs with *movable sieves*, which obtain the currents by pushing the sieve up and down in the water, either by hand or by power; and jigs with *fixed sieves* in which the currents are produced either by a plunger or by a stream of hydraulic water brought from a hydrant into the hutch, that is, the space beneath the sieve, or by both. The fixed sieve jigs are by far the more common. This hydraulic water acts to modify both pulsion and suction. Its increase adds to the former and diminishes the latter. It may be increased to an amount that will stop suction altogether; this, however, is more a theoretical idea than a practical method, on account of the large amount of water required to accomplish the result. If on the other hand, the hydraulic water is reduced to zero, then suction is increased to the maximum and suction equals pulsion.

The jigs have proved the most valuable concentrators yet devised for all the coarse products. For comparatively fine products they are not used to the extent they were before the introduction of tables of the Wilfley type. There are places, however, where jigs are used on moderately fine material in preference to tables. The question as to which machine will be used can be decided only by tests. Jigs have never been used to advantage for treating slimes. They can be used in the separation of two, three, or four minerals, for example, quartz, blende, pyrite, and galena. The coarse jigs can be used to save clean lump ore and to send the lumps of included grains to the crushers to be re-crushed. The fine jigs can be used to yield pure heads, middlings for re-crushing and washing, and tailings clean enough to throw away. The feed to jigs may be sized products, sorted products, or natural products. Jigs are, as a rule, final washers, that is to say, among the products which they turn out are one or two finished products — heads, or tailings, or both. Besides, they generally yield one unfinished product which may be either the heads, the middlings or the tailings, according to the method of running.

The products of a jig are designated as follows: (1) *Tailings*, which form the top layer and are either skimmed off the top intermittently by hand, or carried over the tail continuously by the carrying current. (2) *Coarse con-*

centrates, which form the heavy or lower layer upon the sieve, and are composed of grains too coarse to go through. These may be removed intermittently by skimming, or continuously by devices called discharges. (3) *Hutch product, the "Hutch" or fine concentrates*, is the part which goes through the sieve. It is discharged intermittently by shoveling or by a gate, or continuously by a running spigot or by an elevator. A jig may be run to make any two or all three of the preceding products. Before taking up the details of jigs, the following definitions will be given of three terms as they will be used by the author: *The bottom bed* is the lower layer on the sieve, consisting of heavy mineral. *The top layer* is the upper layer, consisting mainly of gangue from which the heavy mineral is in the process of being separated. *The whole bed* is the phrase used when the above two are spoken of collectively.

MOVABLE SIEVE JIGS in common use may be divided into:

Movable-sieve hand jigs.

Continuous movable-sieve power jigs.

MOVABLE-SIEVE HAND JIGS.

§ 361. This form of jig is used where concentration is being proved, or where the plant is small, or where, as in Missouri, the mines are pockety, and a large, elaborate mill will not pay. For these reasons, the hand jig will be considered in considerable detail.

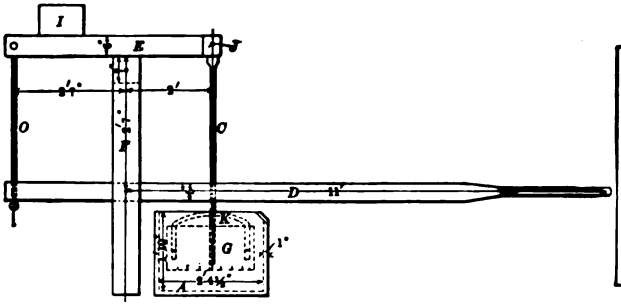

FIG. 167*a*. — SIDE VIEW OF HAND JIG AT MILL 13.

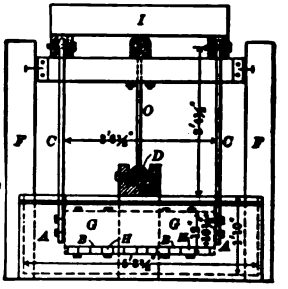

FIG. 167*c*. — END VIEW.

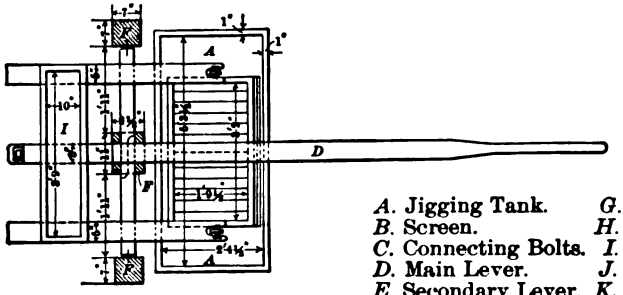

A. Jigging Tank. *G*. Jigging Box.
B. Screen. *H*. Lattice.
C. Connecting Bolts. *I*. Counterweight Box.
D. Main Lever. *J*. Slip Joint.
E. Secondary Lever. *K*. Adjusting Arcs.
F. Supporting Posts. *O*. Auxiliary Connecting Rod.

FIG. 167*b*. — PLAN.

The jig (see Figs. 167*a* to 169 *c*) consists of a jig box *G* with a screen bottom *B*, two connecting rods *C*, a jigging lever *D*, and often a secondary lever *E*, two supporting posts *F*, and a jigging tank *A* filled with water. The jigging tank is made of wood. The jig box is a horizontal, rectangular frame of

boards on edge. The screen is placed from 2 to 3 inches above the bottom to destroy the evil effect of side currents upon the whole bed. This space is also used for lattice supports for the screen if it is needed. (See Fig. 167*c*.) When a grating is used as a sieve, however, no lattice is required. (See Fig. 169.)

The connecting rods *C* are arranged with adjusting arcs *K* to level the screen sidewise. (See Fig. 168*a*.) The endwise leveling is done upon the posts. If

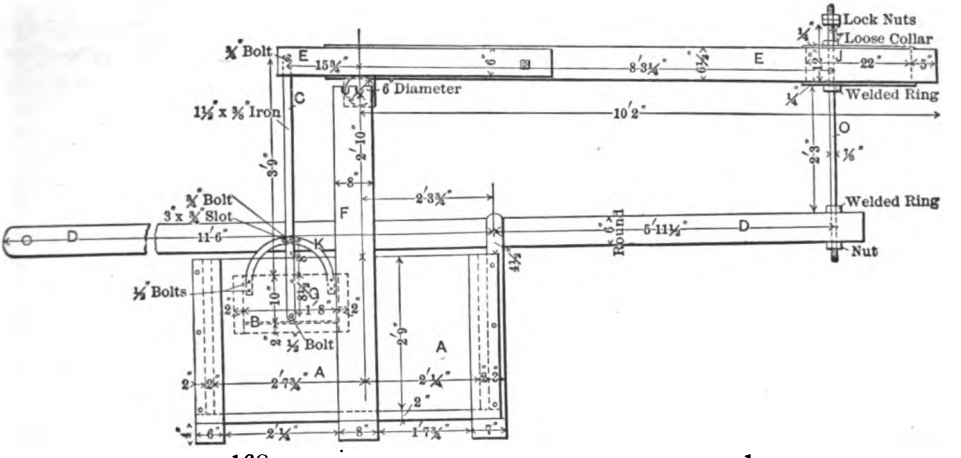

FIG. 168*a*. — ELEVATION OF HAND JIG AT MILL 1.

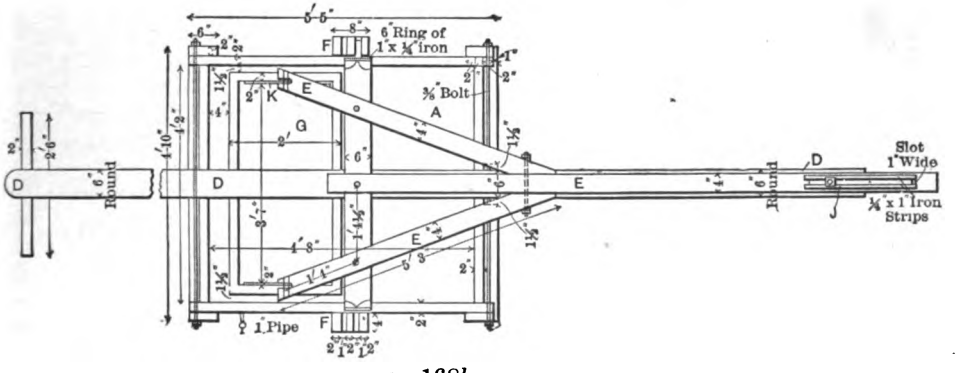

FIG. 168*b*. — PLAN.

out of level, the whole bed will work to one side or the other. The jigging lever is made in two ways. Either the pivot is between the point of application and delivery of power, or by using two levers the pivot is virtually at the end of the lever. The first scheme (Fig. 169*a*) requires an upward push, the second (Figs. 167*a* and 168*a*) a downward push on the lever to give the downward strong impulse to the jig box, which is necessary for effective jigging. The second form appears to be easier to work than the first. The long leverage shown in Fig. 168*a* is probably due to the fact that this jig was used in a mill 11,000 feet above the sea. The jigging lever is best at the height of the hips, although sometimes used up over the head of the operator, and his labor is easier and more effective if he stands on a spring board.

To make the downward movement of the screen more sudden and therefore remove momentarily the screen support from under the ore bed more effectively,

a slip joint *J* is used, causing a downward blow to be imparted to the screen. In Figs. 167*a* and 169*a* this is a slot in the top of the connecting rods. In Fig. 168*a* a connecting rod *O* slides through the secondary lever *E*.

A counter-weight may be required, as in Fig. 167*a*, to balance the jigging levers; this is not needed in Fig. 169*a* because of the weight of the loaded jig, and in Fig. 168*a* on account of the length of the secondary lever.

§ 362. The method of working is to charge up the jig box with ore of proper size and depth. The coarser the ore, the deeper the whole bed may be, and the deeper the whole bed, the greater the output, but when too deep the separation by gravity is hindered. It is jigged with the proper amount of stroke and

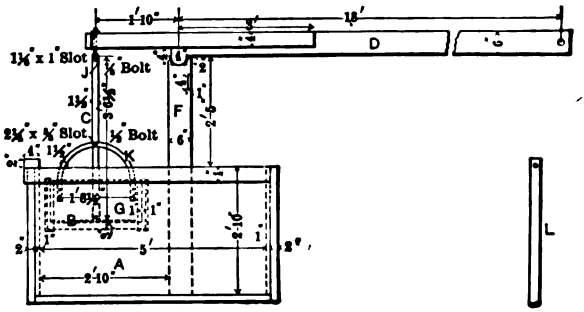

FIG. 169*a*. — SIDE ELEVATION OF HAND JIG AT MILL 2.

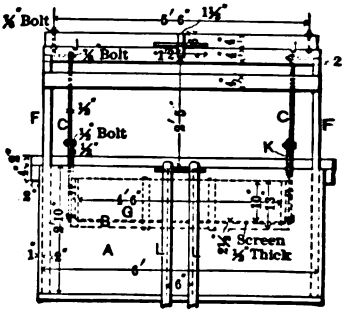

FIG. 169*c*. — END ELEVATION.

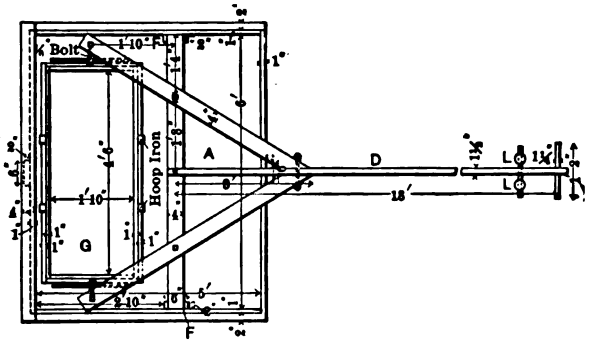

FIG. 169*b*. — PLAN.

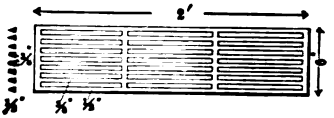

FIG. 169*d*. — ONE SECTION OF SCREEN.

number of strokes per minute (the coarser the ore, the longer the stroke and the less the number per minute), giving a sharp downward motion to the screen to release the whole bed from it and so allow the ore particles to settle through the water under hindered-settling conditions. The motion should be stronger with coarse than fine ore. The return movement brings the water back through the screen and uses suction to draw down the fine concentrates. Experience only will give exact data on the speed, the amount of throw, and the number of strokes required for different ores.

When the jigging is finished, the lever is raised or lowered, as the case may be, and fastened to its hitching post *L*. (See Figs. 169*a*, *b*, and *c*.) The screen is thereby lifted out of water. The top layer is skimmed off with a short handled hoe and thrown upon its heap. More ore is charged and the operation repeated until the concentrates have accumulated; then, after the top layer

is removed, the middle portion is skimmed off, generally to be returned; the bottom layer, which has accumulated up to 2 or 4 inches deep, is skimmed off as concentrates. The hutch product which accumulates vertically beneath the screen, is shoveled out when sufficient material has accumulated, and the fine sludge which settles in the rear part of the jig tank, is taken out separately. Some of the tanks are made large on purpose to secure this fine product and in this case a partition coming up two-thirds of the way, will keep the coarse hutch out of the fine sludge. The coarse concentrates and hutch products are generally treated again on a finishing jig with finer screen and make concentrates and hutch ready to ship. The sludge may be rich enough to ship, or it may need buddle treatment to bring it up to the required standard. Where two minerals which belong to different markets, for example, galena and blende, are concentrated, they may be separated on a finishing jig.

Where re-crushing of middlings is not to be resorted to, the jig, after several times having had tailings skimmed off from it and new ore charged, will be skimmed, yielding tailings or top layer, middlings to be returned, and coarse concentrates or bottom layer. The object of taking these middlings is in order that the concentrates may be freer from quartz and the tailings freer from ore. It also furnishes a layer on the sieve which prevents gangue from rattling down into the hutch while the next charge is being put on. After these middlings have been returned a few times, making an accumulation of them, the attendant will insensibly take off his tailings a little richer and his coarse concentrates a little poorer. This is his only way of disposing of the included grains for which his plant has no special provision.

A hydrant with water almost shut off, an overflow pipe and a little settling tank, may be provided for keeping the water at a constant level in the jig tank, or water may be added by a bucket from time to time. One or more holes are placed in the side of the tank, near the bottom, one below the other. for drawing off the water when it is desired to remove the sludge.

The labor required in all the mills is one man to a jig, which is high compared with machine jigs. The capacity given by Rittinger for his hand jig is 3 to 4 cubic feet of ore per hour for each square foot of sieve surface. Hand jigs cost about $20 each and require little repairs. They can be put together anywhere with a saw, axe, chisel, auger, and a few simple iron pieces.

In practice, the walls of the jig box may or may not project above the water during all parts of the stroke. When it projects above, then suction is equal to pulsion, that is to say, just as much water will go down through the jig bed per stroke as rises up through it. When, however, the box is immersed, according to the amount of immersion, suction will be more or less diminished, leaving pulsion as much as before and giving a much softer and more open whole bed and one which would complete the separation into layers in much shorter time. This is true because of the lift pump action of a jig which allows the water to rise more easily than to go down through a jig bed; here the water so pumped up flows over the sides when the jig is immersed. The latter method would be preferable for closely sized material, the former, probably, for mixed sizes.

The hand jig is a valuable means of testing the best conditions for treating any ore by jigging as it can be varied so easily and the results obtained so directly.

Continuous Movable-Sieve Power Jigs.

§ 333. All of these jigs have in common a jigging tank, a jigging screen and frame, and in most cases some special connecting joint between the tank and frame; some mechanism for giving the sieve its vertical oscillations; a feeder for bringing ore at a constant speed; and hydraulic water supplied to the hutch.

They also have devices for removing the tailings, the coarse concentrates and the hutch product, and for elevating the tailings water, in general returning it into the hutch of the machine. These devices enable them to have a high capacity and a low consumption of water. As generally run they have strong suction owing to the fact that most of the water that passes up through the bed has to pass down again. The Hancock jig has been taken as an example of this class.

§ 364. THE HANCOCK JIG. — The Hancock jig is of Australian origin and was invented by H. R. Hancock. It was designed to treat low-grade sulphides such as chalcopyrite, bornite, sphalerite, etc., and proved to be a great success. A cut of this machine is shown in Figs. 170 *a*, *b*, and *c*.

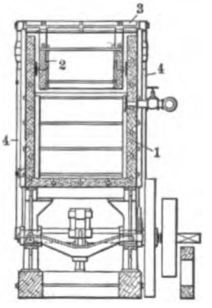

FIG. 170*c*. — CROSS-SECTION.

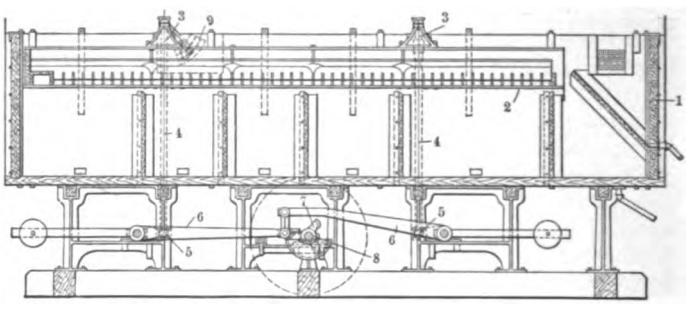

FIG. 170*a*. — OUTLINE OF THE HANCOCK JIG.

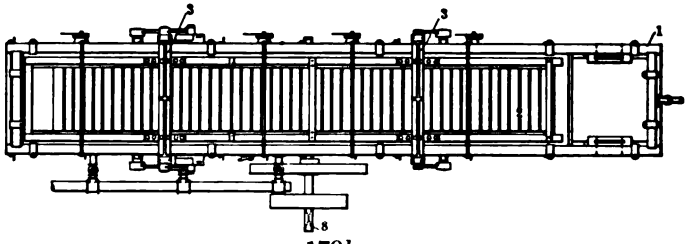

FIG. 170*b*. — PLAN.

The jig consists of a box (1) 25 feet long, 4 feet 2 inches wide, and 5 feet 9 inches high, which forms the hutch. In the hutch box, and submerged in the water, works the screen frame (2), or sieve, of the jig. This sieve is 20 feet long and 2 feet 8 inches wide and is divided into a series of pockets extending across the screen. These pockets maintain and hold a bed, through which the concentrates are drawn into the hutch. This screen, or sieve, is carried on two cast-steel cross-bars (3) securely fastened to the screen. The cross-bars are supported by four upright arms (4), two on each side. These arms or rods are connected at the bottom to rocking arm shafts (5), the rocking arm shafts being connected to levers (6), the ends of which engage a three-way cam (7) on the main drive shaft (8) of the jig. This main drive shaft revolves at 60 to 65 revolutions per minute, and the result of this motion is a reciprocatory movement imparted to the sieve, which can be described as an upward and forward movement and a downward and backward movement. The upward and forward movement is produced by the rocking arms, the downward movement of the sieve is produced by gravity, and the "bump" or backward movement is produced by the radial bar (9), which is connected to the end of one

cross-arm, as shown in the illustration. The up and down motion is about ⅜ inch, the backward motion, or the "bump," is only sufficient to advance the feed properly along the screen. Both the amount of the up and down motion and the "bump" are controlled by proper adjustment, so that this movement can be regulated to suit different kinds of ores. The number of reciprocations of the screen is 180 to 195 per minute.

The advantages gained by the Hancock jig are numerous. In the first place it results in a great simplification of the mill. In one mill this jig is dealing with the whole of the material formerly treated by eight Harz jigs. The Harz jigs treated four separate sizes. This means fewer jigs, trommels, and launders, less power, only about ¼ the water, and less wear and tear of screens. The quality of work accomplished is said to excel that of the Harz jigs, the concentrates being richer and the tailings distinctly poorer. The capacity of the Hancock jig is high, often amounting to as much as 500 tons per 24 hours. About 800 gallons of water or 3.2 tons are required per ton of ore. The power required in one instance is reported as 4 horse-power.

Fixed-Sieve Jigs.

§ 365. In these machines the screen is stationary and the water is forced to rise and fall through it by the action of a piston or plunger which is generally placed in an adjacent compartment connected with the hutch or space below the screen. These machines are almost always driven by power and are the forms in most general use to-day. There are three classes of these jigs: (1) The Harz type, where the plunger receives its up and down motion from an eccentric revolving at uniform rate. (2) The accelerated jigs, in which some form of mechanism is adopted to give the plunger more rapid motion during pulsion than during suction. The term Harz jig has been used loosely in the literature of the subject. The author has, therefore, adopted the above definition which is the one commonly accepted in the United States (3) The pulsion jigs in which the pulsion is furnished by a pulsating water current. In these suction is done away with.

§ 366. The Harz Type of Jigs. — This machine has found far more favor than any other jigging machine. It is used successfully for coarse and fine ores, for higher and lower specific gravity minerals. By it two, three, and even four mineral separations can be made.

It consists of a jigging tank with vertical longitudinal partition, on one side of which is the screen upon which the ore rests; on the other side is the plunger for creating the currents. As the partition does not reach the bottom, there is free passage for the water from the plunger to the sieve compartment and return. The jig may have one or more jigging compartments, each with its own sieve and plunger, separated by cross partitions; two, three, and four are the most common number of these compartments, although as many as seven have been used in Southwest Missouri.

Figs. 171*a*, *b*, and *c* show a common form of the Harz jig as used for medium and fine work. In this jig each compartment *A* is 34½ inches long and 16½ inches wide, net size inside the lining *P* and the plunger compartments *B* are 34½ inches long and 14½ inches wide, net size. Beneath every sieve and plunger is a hopper *C* which serves for connecting the two and also for collecting and discharging the hutch product. For convenience, the apex of the hopper is brought nearly to the front side of the jig. Near the apex of each hopper is a spigot which consists of a round hole *D* 2 inches in diameter passing through the plank and through an outside plate. This hole has a plate cover *E* outside, which, sliding around a pivot, serves to shut off or regulate the flow. Between each sieve and plunger compartment is a continuous longitudinal

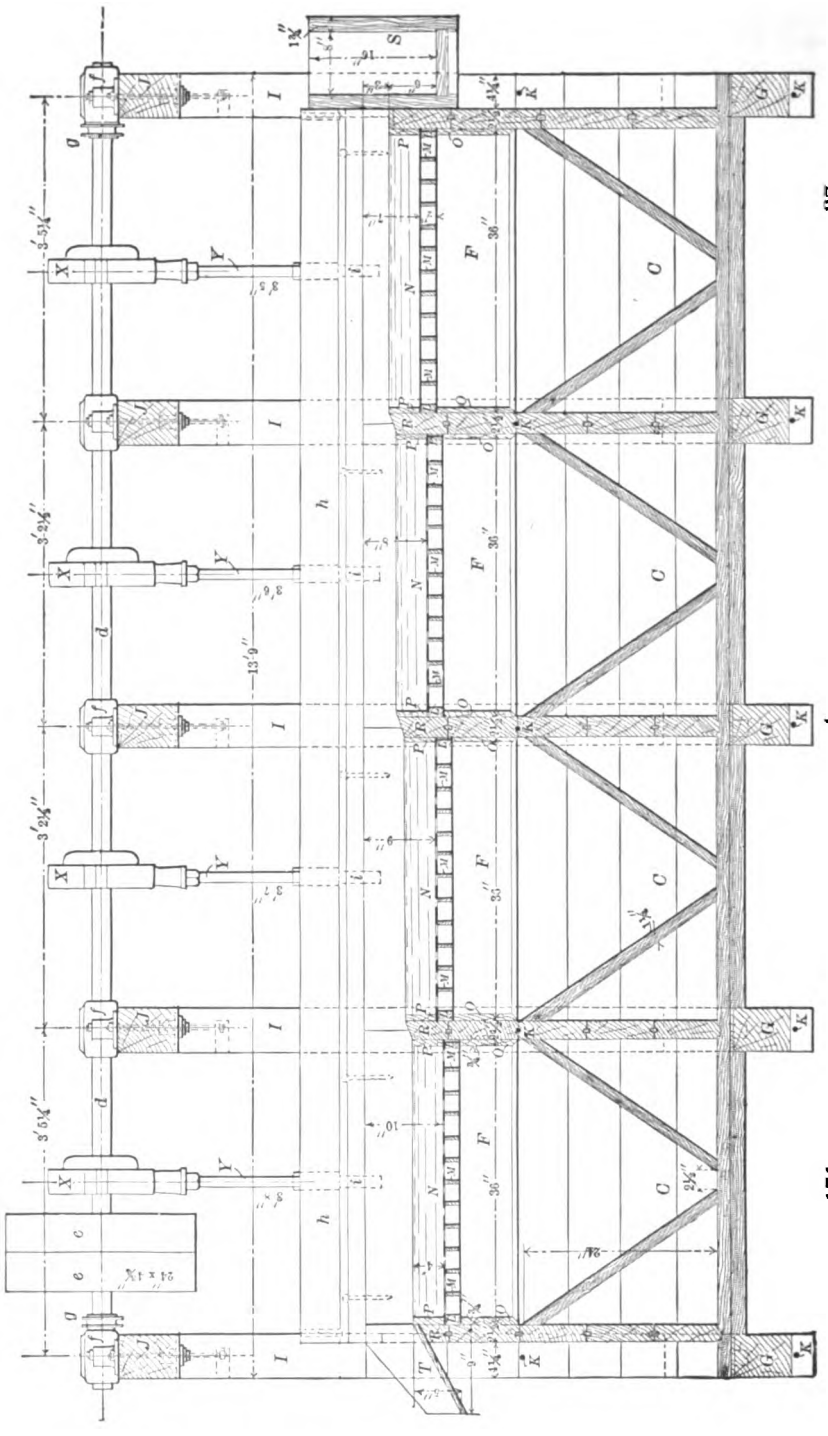

FIG. 171*a*. — LONGITUDINAL SECTION OF THE 4-COMPARTMENT DOUBLE HARZ JIG AT MILL 37.

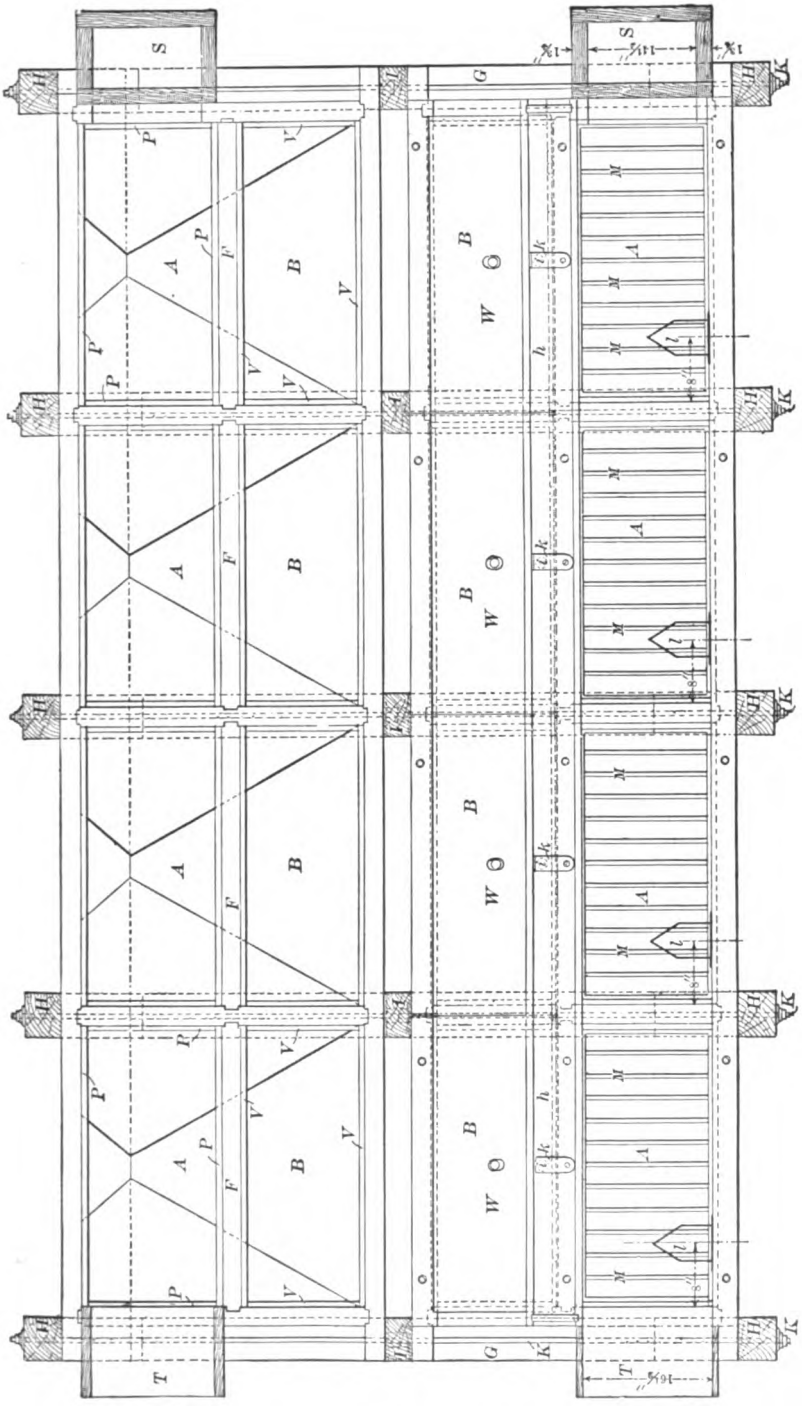

FIG. 171b. — PLAN.

partition F which extends down 12, 11, 10, and 9 inches respectively below the sieves N and serves to distribute the pulsion from the plunger U evenly over the sieve. The ends, sides, bottom, and partitions are all built of 2½-inch planks.

Two jigs are often placed back to back and their tanks are supported and bound by timber frames of which there are three sets on the 2-compartment jig and five on the 4-compartment. Each set consists of a sill G, two outside posts H, a center post I and a cap J. The caps serve as supports for the driving mechanism and while the posts likewise serve this purpose, they are also made to do the important duty of buckstaves by two ⅝-inch tie rods K for each set.

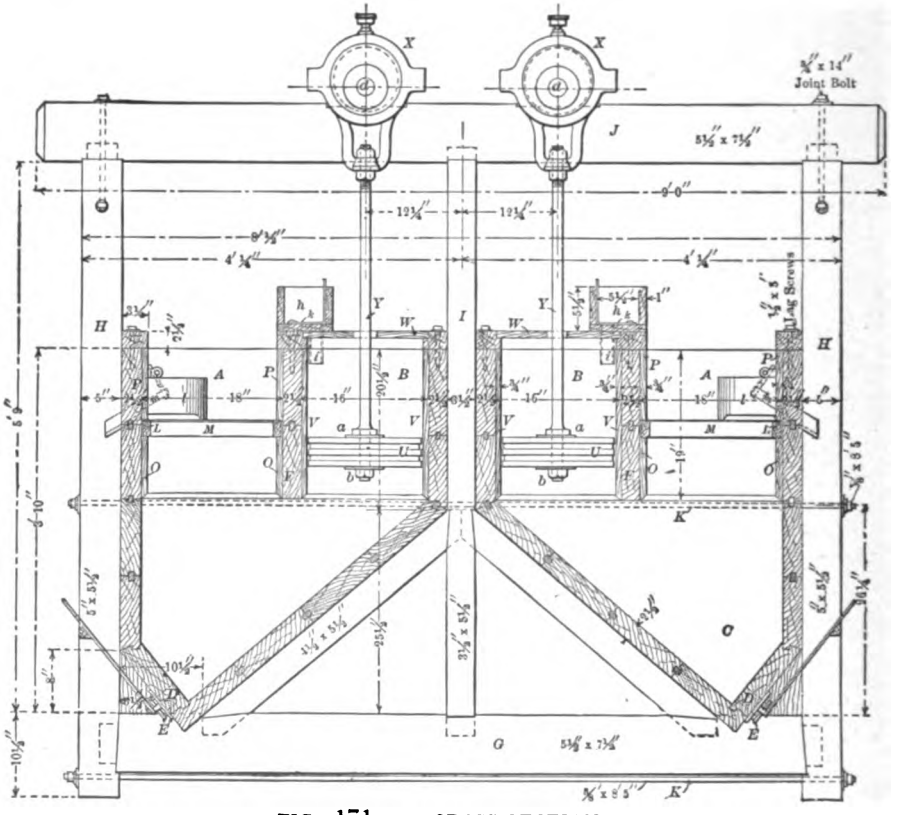

FIG. 171c. — CROSS-SECTION.

The screen frame is built of 2×1-inch strips L on edge, with cross-bars M ½-inch thick. The screen N is tacked to the top of this and the whole thing rests upon a ledge or lining O of ¾-inch boards extending all around the compartment. It is held down by ¾-inch board linings or cleats P above. This arrangement makes the surface of the wall of the compartments nearly continuous without obstructions. Between each sieve and the one following is a cross partition or tail board R 4 inches above the sieve. The top of the partition slopes downward toward the following sieve, which is placed 1 inch lower. The slope is such that the ore is delivered on a sieve at the same level as it leaves it. Before the first sieve is a dead box S 16 inches deep and 8 inches wide, which serves to deliver the feed quietly to the whole width of the sieve

through a slit 3 inches high and 6 inches above the bottom. A gap is cut at the tail end of the last sieve and a spout *T* put on for carrying away the tailings from the whole width of the sieve.

The plungers *U* fit loosely in their compartments and are made of five thicknesses of ¾-inch board. The second and fourth layers have their grains 90° with that of the others. They are also ½-inch smaller in length and width to form the water packing. The plunger compartment is lined with ¾-inch boards *V* to take up the wear. To confine the swash it has a cover *W* of 1¾-inch board with a hole in the center for the plunger and one at the side for the hydraulic water pipe. The top of the plunger is 3 inches below that of the sieve when at the middle of its stroke. A reciprocating motion is given to each plunger from an eccentric *X* through a 1¼-inch eccentric rod *Y*. The plunger is attached to the rod by means of a shoulder and washer *a* above and lock nuts and a washer *b* below. The eccentrics are adjustable to give any throw from 0 to 2 inches and are all placed upon the same shaft, so as to pulsate approximately together. The shaft *d* is $2\frac{7}{16}$ inches in diameter and is supplied with a tight and a loose pulley, *e*, each 24 inches diameter and 4½ inches face. There are also five boxes *f*, one on each of the frames and there are two collars *g* for guiding the shaft.

The hydraulic water is put in on top of the plungers and is distributed to each compartment from a trough *h* running the whole length of the jig on the longitudinal partition, in the bottom of which are nipples *i* of 1¼-inch pipe covered by sliding gates *k* for regulating the quantity.

The discharge for coarse concentrates consists of an iron pen *l* which acts as a gate for them to pass under and a pipe *m* which acts as a dam for them to pass over. The pipe may be slid into the wall of the jig, thereby adjusting the height of its inlet end.

§ 367. HODGE JIG. — The Hodge jig shown in Fig. 172 has supplanted the Collom jig in the Lake Superior copper mills being used at all of the mills except the Calumet and Hecla. The only thing essentially new about this jig is the differential motion that is imparted to the plungers. This will be discussed under a later heading.

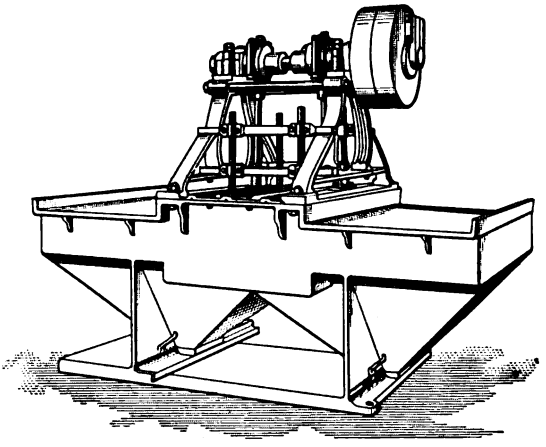

FIG. 172. — HODGE JIG.

§ 368. THE NEW CENTURY JIG. — (See Fig. 173.) The essentially important features of this jig are: 1, a differential motion imparted to the plunger giving it a quick down stroke, an instant at rest, and a slow return; and 2, a flap-valve plunger which fits tight on its down stroke and loosely on the return stroke. The plunger (1) instead of fitting its compartment has a one inch water way on all of its four sides. Along its edges, which are beveled, rubber belting (2) is secured, which acts as flap valves and which fits tightly when the plunger makes its down stroke but allows the water to pass around it on the up stroke. This results in a sharp pulsive action followed by little suction. At each corner of the plunger is an adjustable guide (3) which works in an angle iron in the corner of the

compartment. Motion is imparted to the plunger by means of a cam (4) which works on a roller (5) carried in the elbow of a yoke (6) which is bolted to the plunger. A coiled spring (7) of adjustable pressure bearing on top of the yoke serves to force the plunger down when the cam runs off the roller. At the end of this quick downward stroke the plunger is stopped by the nut (8) at the top end of the guide rod upon which the spring is coiled, coming in contact with a rubber buffer (9) on top of the upper frame. The motion of the plunger is not stopped by the cam. As the cam revolves again it lifts the plunger slowly until the highest point is reached, when this cycle is repeated. The cam makes 150 revolutions per minute.

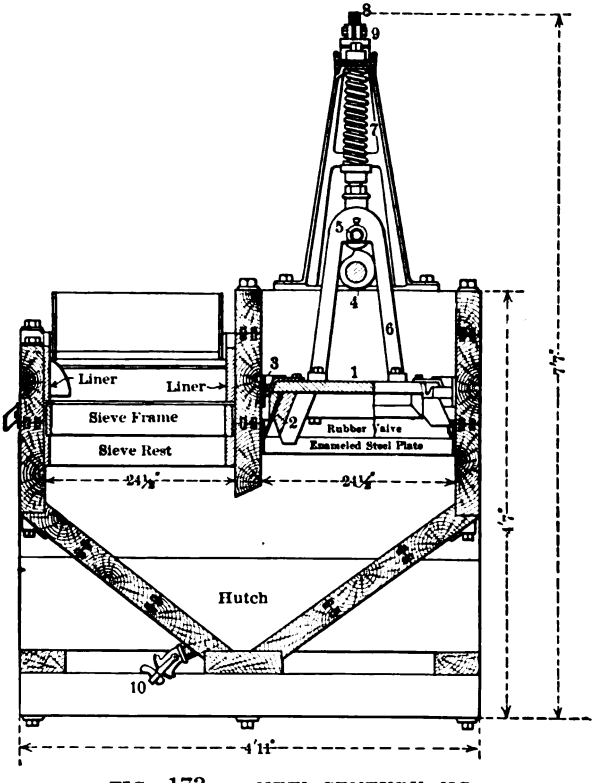

FIG. 173. — NEW CENTURY JIG.

The hutch product of this machine is removed in the usual manner by a tap (10) at the lowest point. A multiple valve is utilized to draw middlings from the last of several compartments for sizes of grains under ¼ inch. This is shown in Figs. 174*a*, *b*, and *c*.

Referring to the cross-section, it will be seen that a shield (11) which extends downward into the middlings serves to make a passageway upward and outward for that product. Its passage outward is regulated by the valve (12) which in the cross-section shows as a circle, and which is there represented closed. The valve consists of a plug with six or more notches in it, which can be rotated about its axis by a handle. If the valve as shown in the cross-section were rotated 90° this would afford a passage outward for the middlings. For sizes of grain larger than ¼-inch, the middlings are discharged from the

last compartment by the jig discharge shown in Figs. 175*a*, *b*, and c. Two shields (13) dip into the middlings and make a passageway outward. A gate

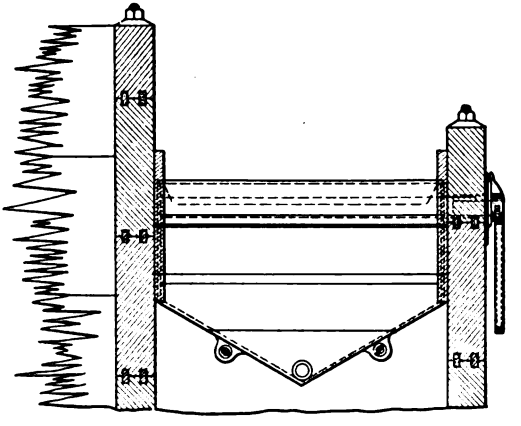

FIG. 174*a*. — NEW CENTURY MIDDLINGS DISCHARGE.

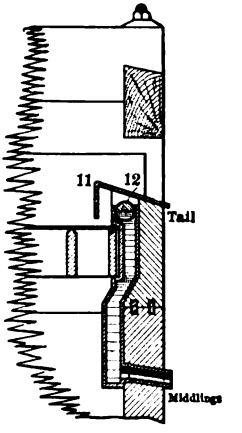

FIG. 174*b*. — SECTION THROUGH CENTERS.

(14) which in the cross-section is represented closed, regulates this operation.

This jig has given satisfaction in the treatment of zinc ores in Austinville, Virginia, where it is thought that the differential motion of the jig is of less importance, however, than the form of the plunger, which is highly recommended as doing good work and keeping the screen bed clean. In a slightly modified form it is used in coal washing and will be mentioned under that heading.

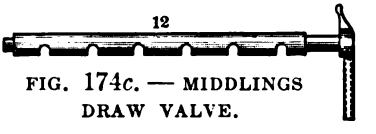

FIG. 174*c*. — MIDDLINGS DRAW VALVE.

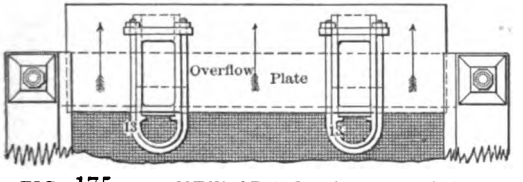

FIG. 175*a*. — NEW CENTURY DOUBLE END DRAW FOR COARSE MIDDLINGS. PLAN.

§ 369. CLASSIFIER JIGS. — Jigs intended to effect a preliminary separation of the slimes from the coarser particles of ore have been introduced in a number of mills. These devices are known as "slime classifiers" or classifier jigs. They

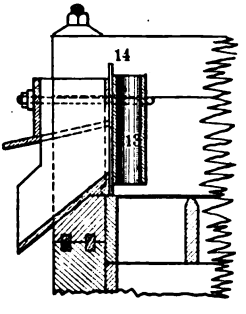

FIG. 175*b*. — SECTION ON "A–B."

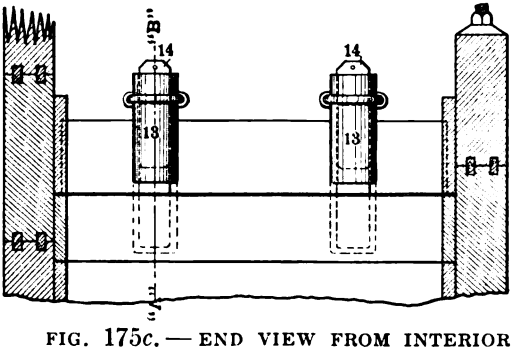

FIG. 175*c*. — END VIEW FROM INTERIOR OF TANK.

are not strictly speaking classifiers, but jigs with a slime-separating device added. In the same sense a Wilfley table might be spoken of as a slime classifier for the reason that it separates slime from sand. The machine of this type which has thus far found the most extended application in the mills is the Woodbury slime classifier. Since the slime classifier differs only in minor details from the Woodbury jig, it has been thought best to take up the entire Woodbury system under a single heading.

§ 370. THE WOODBURY JIG. — The Woodbury slime classifier and jigs comprise in ordinary mill phrase a three-compartment jig, the compartments of which Woodbury names as follows: a classifier jig, a clean-up jig, and a middlings jig.

§ 371. THE WOODBURY SLIME CLASSIFIER, as has already been said, is primarily a jig with plunger compartment at the head end. A device for separating slimes from the sands is fastened to the tail of the jig. The feed comes on to the classifier over the plunger compartment unclassified, with slimes included, and is subjected to a jigging action, causing stratification, heavy mineral to the bottom, then middlings, sands, and slimes. The pressure of hutch water upwards through the screen holds the light particles or slime in suspension. A large brass shield (1) (Figs. 176*a* and *b*) extends down into the bed of sand, which seals it against the entrance of slime, the slime being warded off and passing around the shield over the tail of the jig and away for further treatment. The sands pass under the slime shield and discharge through a gate (2) at a lower level than the slimes. This gate is regulated to suit quantity and size of material discharged. This discharge ordinarily is a middlings product which goes to subsequent jigs for further treatment. Fine material is jigged through the screen into the hutch and discharges through plugs. A brass concentrate cup (3) inside the slime shield extends down and into the bed of mineral, which seals it against the entrance of sands, the mineral passing under the shield and out through a discharge away from the machine. The hutch is built entirely of cast iron except where there are acid waters, when a wooden hutch is provided. A quick and slow-motion device, consisting of a variable crank connection between driving pulley and eccentric shaft, gives to the plunger a quick downward and slow upward motion. Eccentrics are of the double design with eccentricity of 0 to 3 inches and are arranged for ready adjustment.

The advantages of the Woodbury slime classifier or first compartment of the Woodbury system are as follows: The uniting of classifying and jigging operations into one and the consequent saving of floor space; diminishing the dilution of slimes as a help to slime treatment; the saving of water and power; the doing away of settling-tank systems; the increased capacity, this jig having six times the capacity of the old Collom and Evans jigs.

§ 372. CLEAN-UP JIG. — In the Woodbury system of concentration the pulp from the first jig, or classifier, passes into the clean-up jig flowing over the plunger compartment. (See Fig. 176.) The clean-up jig has a differential motion imparted to the plunger, whereby the plunger makes a quick downward stroke and returns slowly. The clean-up jig discharges concentrates from the sieve by means of ovoid brass shields *C*, which are located near the tail end of the jig, and placed where they draw on the bed of concentrates equally from both sides. The shields extend into the bed of concentrates which seals them against the entrance of low-grade material. The concentrates are discharged from the center of these shields by adjustable brass discharges through the pipe *P* out of the machine. The adjustment is made by varying the height of the end of the discharge pipe, which controls also the depth of concentrates on the screen, and consequently regulates the

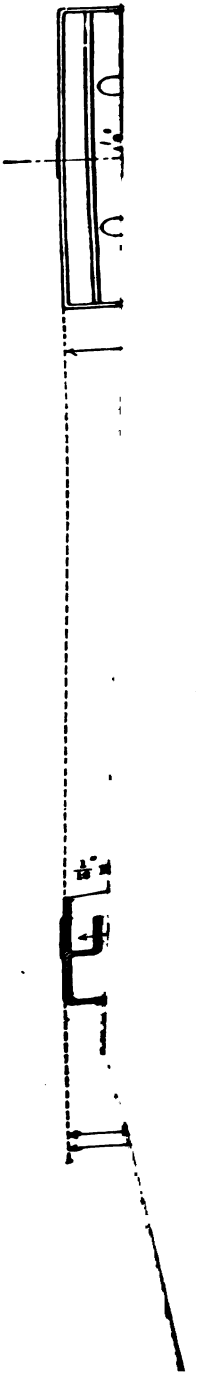

LIBRARY
OF THE
UNIVERSITY

quality of the discharged product which goes through the bed of concentrates and the sieve and is drawn off below. The middlings are drawn off through the hydraulic middlings discharge. An angle from shield *S* is fastened across the tail end of the jig, extending down into the middlings product which seals it against the entrance of tailings. The pipe *A* permits the sand under the shield to take on the jigging motion. From under this shield, a number of openings, placed at intervals of six or seven inches, lead into the closed compartment *M*.

The middlings discharge from under the shield through openings into the closed compartment and discharge through plugs in the bottom. A fresh-water supply pipe *W* in this compartment regulates the quality of middlings which can pass under the shield and so be able to get into the re-grinding plant. The tailings pass over the tail of the jig into the compartment *G*. The ore enters the next jig through openings *O* at the bottom of this compartment, and the excess of water which comes to this compartment from the clean-up jig flows over the top into the trough marked *water lesseners* and is directed into the hutch of the next jig.

§ 373. MIDDLINGS JIG. — In this next jig, called the middlings jig, the same products are made in the same way as in the clean-up jig, except that the tailings are discarded. This jig is like the clean-up jig except that it has a simple eccentric without differential motion. The dimensions of the parts are given in the drawing.

In this system of concentration, hydraulic classifiers are eliminated, while the slimes are nevertheless separated, and sent to the slime tables with little dilution. Also a true middlings product of included grains is made by the hydraulic middlings discharge on each jig. The feed to the jig classifier is under ⅛ inch to and including slimes. Under certain circumstances more than two jigs follow the jig classifier. If the tailings values of the middlings jig warrant it, the tailings are run upon another similar jig and re-treated in the same manner.

At the Calumet and Hecla, two sets of these jigs, of five sieves each, handle all the tonnage from one stamp on the conglomerate; and three such series are used on the amygdaloid. The conglomerate stamping rate averages 325 tons per 24 hours, all of which goes to the jig classifiers where about 45% is separated as slimes. The first two of the five compartments yield free copper, and the succeeding three discharge middlings for re-crushing in the Chili mill. On the amygdaloid the stamping rate is 600 tons, all of which goes to the jig classifiers where some 40% is separated out as slime. This gives a maximum capacity of the 24 by 36-inch jig as 120 tons per 24 hours. On coarser material, where the tailings of the jig are to be re-crushed, these capacities can be greatly exceeded.

For coarse jigging the Woodbury "Bull Jig" has been introduced to cover the field of and replace the "Bull Harz Jig." It is built of wood or iron on the Woodbury principle and has large capacity. It can be used on unsized material from ⅜-inch up. It can be equipped with a classifying device for separating wood chips or pulp.

§ 374. RICHARDS' PULSATOR JIG. — As will be shown later it has been found that when treating fairly closely sized products, the removal of the suction of the plunger jig results in an enormous increase in the speed of jigging. Suction is of great value when a hutch product is desired as in the case of jigging an unsized product. It is a drag, however, in that it cuts down the capacity of the jig enormously. It has been by working along this line that the pulsator jig has been evolved and put in shape for practical operation. The pulsator jig is, in a sense, derived from the pulsator classifier previously

described in this volume. It is not claimed that this machine does away with the Harz jig. When, however, it is possible to treat sized products, the pulsator jig with four pockets, each 4 inches square, is capable of doing the work of three double four-compartment Harz jigs occupying nearly 70 times the floor space, using 5 times the water and 5 times the power required for the pulsator. One square inch of screen area is moreover capable of doing the work of 200 square inches in the case of the Harz jig.

It is not claimed for the Richards' pulsator jig that it can do cleaner work than the ordinary jig, but it is claimed that it will use much less water and occupy a marvelously small space compared to its capacity. There is a little crumbling of ore which goes into the tailings, but when the tailings are to be re-ground this may all be recovered. The tailings may, in any case, be screened and this saved. In other jigs the particles remain such a long time in the jig before they are finally discharged as concentrates that their corners and edges are rubbed off to a considerable extent, forming a large amount of fine material that is likely to be lost in the tailings. An illustration of this and a fact well known among jig men is that the material forming the bed of other jigs is worn round and smooth.

The sizes, capacities, etc., of the pulsator jig will be found in Table 89. The letters *J*, *K*, *L*, *N*, etc., in the table refer to similarly marked dimensions shown in Figs. 177*a*, *b*, and *c*.

TABLE 89. — RICHARDS' PULSATOR JIG. SIZES, CAPACITIES, AND DIMENSIONS — SEE FIGS. 177*a*, *b*, *c*.

Screen Surface Each Compartment.		No. of Compartments.	Approximate Capacity in Tons per 24 Hours.	Approximate Gallons Hydraulic Water per Minute.	Dimensions, Approximate Only—Inches.										Size of Main Water Pipe, Inches.
Wide, Inches.	Long, Inches.				J	K	L	N	Q	R	U	X	Y	Z	
2	2	4	10	8	.....	1½	8	18	10	.....	58	26	30	22	2
2	2	6	13	10	.....	1½	8	18	15	.....	58	26	35	22	
3	3	4	40	30	12	3	8	22	14	20	82	34	34	28	2½
3	3	6	55	40	12	3	8	22	21	20	82	34	41	28	
4	4	4	90	70	14	4	8	26⅜	18½	25	103	42	50	34½	3
4	4	6	120	90	14	4	8	26⅜	27½	25	103	42	56	34½	
9	5	4	200	150	18	5	10	32	22½	35	112	48	54	45	4
9	5	6	275	200	18	5	10	32	33½	35	112	48	62	45	
14	6	4	400	300	21½	6	12	39½	26½	45	132	54	60	56	6
14	6	6	530	400	21½	6	12	39½	40½	45	132	54	74	56	

Figs. 177*a*, *b*, and *c* show the jig in elevation, plan, and section. *H* represents the hutch which is of the familiar form, with diving board *h*. The screen is located at *S*, as in the Harz jig. The compartments C_1, C_2, C_3, C_4, are located above the screen and communicate with corresponding pockets P_1, P_2, P_3, and P_4. The dividing plate between *P* and *C* reaches nearly to the screen and acts as a seal or gate for the concentrates which rise in the pockets *P* and discharge through adjustable gates *D* into *O* and thence out to suitable launders.

In place of the usual plungers and eccentrics, there is connected at the top of the hutch a manifold *M*, by which water supplied through the valve *V* is distributed to each of the four compartments of the jig through four plug cocks connected to the branch flanges of the manifold. The water from the main supply pipe, which should be under a head of 30 feet or more, passes through valve *B*. The valve *B* corresponds in function to the plungers in the ordinary jig, yet in its action is radically different, in that it gives pulsations of an entirely different character and in one direction only.

The screen *S* is made up of two layers of brass woven-wire cloth, the lower one being 4 mesh and the upper one 20 mesh. In consequence of the fine

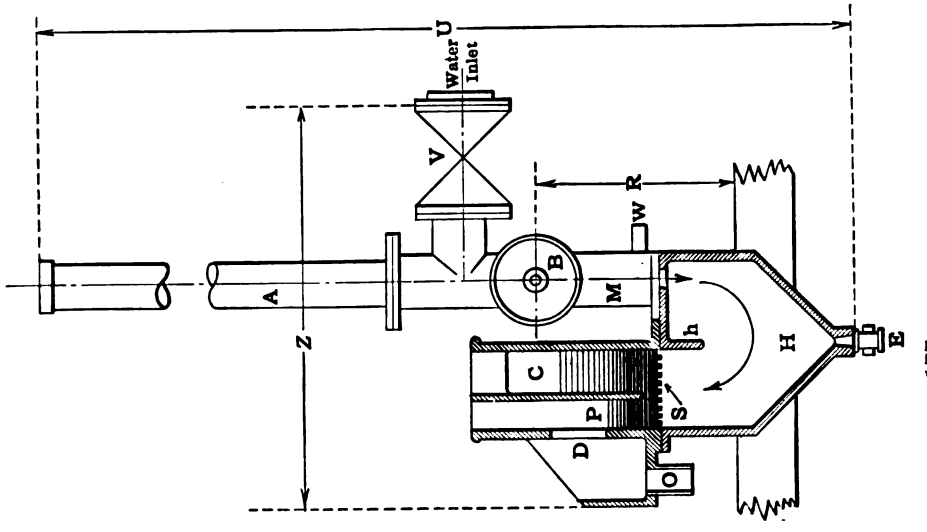

FIG. 177c. — SECTION.

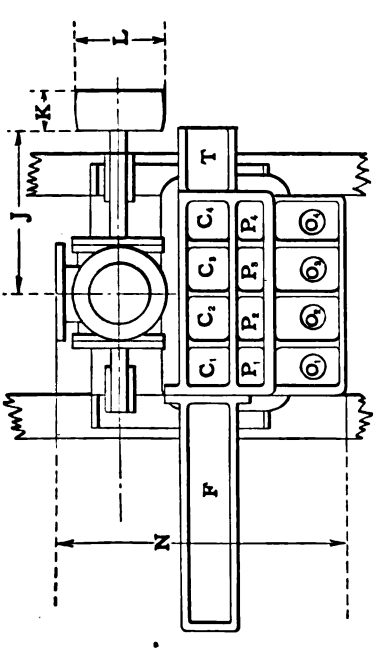

FIG. 177b. — PLAN.

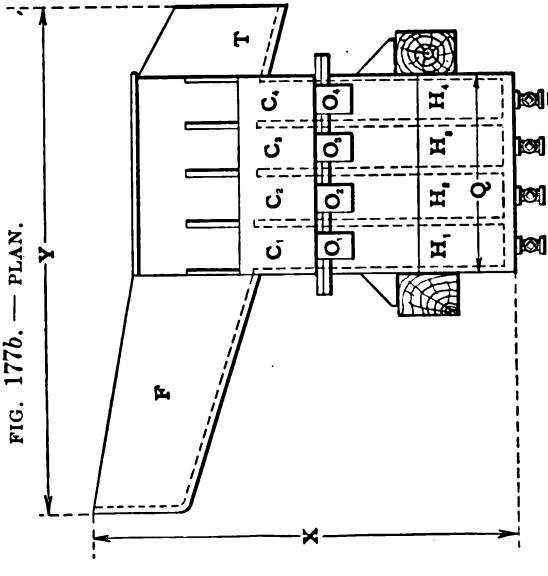

FIG. 177a. — RICHARDS' PULSATOR JIG. ELEVATION.

screen used and the absence of suction in this jig practically no hutch product is made, all the concentrates being discharged in the pockets P_1, P_2, P_3, P_4, and out through D and O as explained below.

§ 375. Operation. — The material fed to the jig enters through the hopper or trough F over the division plates between the compartments C_1, C_2, C_3, C_4, and out at the tailings gate T. In passing through from F to T, as above described, the particles are subjected to the jigging action of the upward pulsating current of water through the screen S, with the result that the heavy mineral particles settle in the compartments C_1 to C_4 and the lighter gangue is carried over and out at the tailings gate T. The heavy particles settle in C_1 to C_4 in the ratio of their specific gravity, that is, the heaviest mineral will be found in C_1 and the lightest mineral in C_4. The discharge of concentrates or heavy mineral is effected by extending the screen, and consequently the jigging action, across under the pockets P. (See sectional view.) All the particles of both mineral and gangue in C are kept in agitation, the mineral being at the bottom and the gangue on top. The mineral at the bottom flows under the division between C and P into P, by reason of the pressure due to the height of the column of material in C. Eventually the height of the material in P would become almost as great as C, but for the gate at D, which allows the mineral from P to discharge. By adjusting the height of the gate D, the concentrates from P are discharged as fast as they accumulate in the bottom of C, the flow from C to P being maintained by the difference in head in C and P.

This very simple method of discharging the concentrates explains also why it is possible with the pulsator jig to feed lean or rich ore, or to stop the feed altogether and then start again without readjustment of the machine.

The Bed of Material — which in C may be as deep as 10 inches — will cease discharging concentrates or mineral as soon as the level of the material in C drops to the level of the gate D. If gangue only is fed to the jig, then it passes over the bed and out at the tailings gate. If mineral and gangue are fed to the machine the mineral accumulates in C and disturbs the balance between C and P until a sufficient amount of mineral is discharged at D to compensate for that which came into C. The gangue that came in with the feed is carried over and out the tailings gate.

§ 376. Size of Feed. — In general the feed to the pulsator jig should be screen sized to the same ratio of maximum and minimum particles as for jigs of the Harz type. At the present time the smallest size material treated is 1 millimeter, and this is being done in a 4-inch four-compartment jig having a capacity of 90 tons per 24 hours. The maximum size as yet treated is 12 millimeters. It seems highly possible that 1-inch material may be treated successfully in the larger-sized jigs, *i.e.*, 9 and 14-inch.

§ 377. Depth of Bed. — The depth of the bed carried on the ordinary Harz jig will probably average from 4 to 5 inches. The bed carried on the pulsator jig will average 8 to 12 inches. This feature of being able to carry such a deep bed makes the performance of the machine less subject to fluctuation, with the result that having once been adjusted for a certain class of ore, this adjustment may remain unchanged while the ore fed to the jig may be lean or rich, or, in fact, may cease altogether, and yet the jig will operate perfectly under all these widely varying conditions. In fact, with some of the first jigs made it was possible to leave the jigs in operation for weeks at a time without changing a single adjustment. The ordinary jig has such a thin bed that the concentrates discharge is decidedly non-regulative and very sensitive to any change in the richness or the quantity of the feed.

§ 378. Tests on Pulsator Jig. — The author had hoped to be able to

give, at this point, a complete mill test showing the work that is being done by the machine in the mills. The only complete test that has been made under mill conditions was made with the pulsator jig treating the fourth, fifth, and sixth discharges of the pulsator classifier. This procedure has been condemned by the author, whose contention is that the machine in only suited to the treatment of sized products. In justice to the machine, therefore, these figures must be omitted. When treating sized products the pulsator jig at the Boston and Montana Copper and Silver Mining Company's mill has received feed carrying 2.3% copper delivering four concentrate discharge products assaying 11.45, 17.4, 15.0, and 12.4% copper respectively. The tailings were re-ground for further treatment. The author has conducted a test upon the single-pocket pulsator jig in the laboratory of the Massachusetts Institute of Technology. This test was made upon a Missouri lead ore with limestone gangue. The material treated was carefully sized through 4 millimeters on 2 millimeters. The results obtained in this test are given in Table 90.

TABLE 90. — PULSATOR JIG TEST ON MISSOURI LEAD ORE.

Product.	Weight. Kilograms.	Percent. Lead.*	Weight Lead. Kilograms.	Percent. Total Lead.
Feed	27.02	11.90	3.220	100.00
Concentrates	3.52	76.12	2.679	83.19
Tailings	23.50	2.30	0.541	16.81
Totals	27.02	.....	3.220	100.00

* All lead assays by permanganate method.

Jigs in General.

The jigs just described represent leading types of modern practice. Before taking up the theory of jigging and a discussion of the various adjustments of jigs and their effect it may be well to study the construction of jigs a little more in detail.

§ 379. Material for Jig Frames and Tanks. — The frames and tanks of jigs were formerly nearly always made of wood. Wood is largely used to-day for Harz jigs and for the Hancock jig. The Hodge jig, so much used in the Lake Superior district, the Woodbury jigs, and in fact many of the jigs in use in American mills have cast-iron frames and tanks. Where there is acid mine water to contend with cast-iron jig tanks must be carefully looked after and must receive frequent applications of paint to prevent corrosion. In such places wood is often used in preference to cast iron.

§ 380. Hutches. — The development of the modern jig may thus be traced: The first continuous jig (Fig. 178), had a square tank and a longitudinal

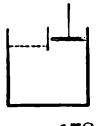
FIG. 178.

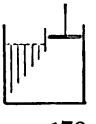
FIG. 179.

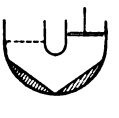
FIG. 180.

FIG. 181.

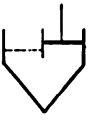
FIG. 182.

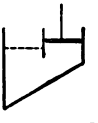
FIG. 183.

partition extending but little below the sieve. The bed was treated very unevenly; the inner part was too active, the outer too stagnant. Guide boards (Fig. 179), to catch and appropriate proportional amounts of pulsion for each part, improved it. A rounded, tubular tank (Fig. 180), improved it still more, but was costly. The inner cylindrical bend was replaced by a straight

partition (Fig. 181), diminishing expense and still retaining the improved quality. The last two, however, were found to bank with sand to a hopper form, as indicated. So the next step was to make the hopper of wood (Fig. 182), and at the same time the importance of elevating the sieve some distance above the bottom of the partition, and of depressing the piston below the sieve, was recognized. Finally, the side hopper for discharging the hutch near the front margin (Fig. 183) was devised. This last appears to be the Harz jig of to-day, although there are many more of the regular hoppers still in use than of the side hoppers. A few of the cylindrical bottomed jigs also are still in use.

It should be said that the end parts of the hopper are generally used with the side parts, but they are left out of the cylindrical bottomed jigs. In case they are omitted, two spigots for each hutch should be used, as, otherwise, sand banks will fill in and make sand hoppers. The latest form of the Richards' pulsator jig has a hutch like Fig. 182 but with the included angle only about 16°. The water is introduced near the bottom. This hutch is much longer and narrower than the one shown in Fig. 177*c* and results in a perfectly even rising current in the pockets *P* and *C* shown in that cut.

The depth of the longitudinal partition below the sieve is of importance. If not deep enough the action is uneven on the whole bed; the pulsion is too strong on the side next the partition and too weak on the farther side; if too deep, unnecessary height and clumsiness are given to the jig. This partition should extend below the sieve a distance equal to 0.4 the width of the sieve for the coarse jigs and about 0.33 the width of the sieve for the fine jigs. The jig tank is provided with linings to take the wear on the plunger side and to hold the sieve frame in place on the jigging side. These linings are usually of wood. The grain of the wood on the plunger side should be vertical. The lining on the sieve compartment is generally 1 inch thick and is interrupted or divided into two parts by the sieve frame. The lower part forms the ledge upon which the sieve frame rests, while the upper serves as a cleat to hold down the sieve frame. The importance of these linings in giving smooth sides to the sieve compartment cannot be emphasized too much. The under lining should reach down so far that all irregular currents are broken up before they reach the sieve, to the bottom of the longitudinal partition is probably deep enough. To insure this result, the inside of the sieve frame should be flush with the lining above and below. The jig, under the best conditions, will have a dead margin all around, due to friction on the sides, but this precaution will reduce it to a minimum.

Spigots for continuous discharge of the hutch products are found in a great variety of forms.

The author is of the opinion that there is no better spigot than the pipe and plug, which is probably the most common. It has the advantages that it yields a full, round orifice at all times; that it can be cleared in an instant if plugged; that it can be replaced in an instant by the next size larger or smaller, if found too small or too large; that it is inexpensive and easily replaced when worn out; that the attendant is not tempted to adjust this discharge, which should be kept constant to avoid deranging the action of the jig. This form cannot, however, be stopped or opened by a handle from above, but must be tended by hand.

The size of the spigot will be ¼-inch pipe for the fine jigs. Occasionally ⅛-inch pipe has been used successfully and the advantage of lessened water obtained.

When coarse jigs discharge their whole product through the sieve, a continuously running spigot large enough to discharge the grains without choking

uses an excessive amount of water and some intermittent device is needed; for example, a large pipe nipple, 1½ inches, 2 inches or more in diameter, with a wooden plug is used. Common molasses spigots are frequently used for both coarse and fine jigs.

§ 381. THE PLUNGER is generally made of practically the same size as the sieve except in jigs of the Collom type. This may seem at first sight a useless enlargement of the machine, but theoretically it is the best practice, as, in hydraulics, for even work, uniform velocity of water should be maintained at all parts of a stream. Where the plunger is smaller than the sieve it must have a longer stroke to do the same work, and give, therefore, a higher velocity to the water, and this high-speed current is liable to reach some portion of the sieve before it is slowed down to the average speed, causing violent boiling of that portion of the whole bed, while other portions are too stagnant and dead.

The height of the walls of the plunger box are sufficient to prevent water from escaping. The cover placed over the compartment restrains the swash due to waves.

It is important that the upper face of the plunger should never be high enough to suck air and give the resulting pounding motion. For this purpose, a safe rule is that the top of the plunger should never, even at the top of the stroke, be above the level of the sieve.

In regard to the construction of the plunger, all practice agrees that to prevent warping and twisting, the plunger should be made of several parts, preferably an odd number, and made of wood, with the grain running lengthwise on the outside layers and at right angles on alternate pieces. The top and bottom parts, where three are used, or the top, middle, and bottom, where five are used, are of the full size; the other parts of about 1 inch smaller length and width, to give one or two rings, respectively, of water packing. Linkenbach recommends plungers with no water packing rings, but has the sides of the coarse-jig plunger rounded to suit the eccentricity.

§ 382. CLEARANCE OF THE PLUNGER AND ITS ATTACHMENT TO THE CONNECTING RODS. — The clearance is the space between the edges of the plunger and walls of the compartment in which it moves. A space is needed to provide for any slight swelling of the wood and for dirt in the water, so that the plunger shall not lose power by friction, or cause wear on the lining. Since the plunger is usually driven by an eccentric without a cross head, the rocking motion will require either an increased clearance or a rounding of the side of the plunger. The latter may easily be done on a five-part plunger with two rings of water packing, by making the center part slightly larger than the top and bottom parts.

The clearance required for the rocking motion is comparatively little; for example, with a plunger rod 48 inches long, a plunger 5 inches thick, and a throw of 2 inches, the total side clearance is 0.2 inch, or 0.1 inch on each side, or if it is gained by rounding top and bottom it would only be 0.05 inch shaved off from the two top and bottom edges of the sides, leaving the center width unaffected. More clearance will be required when the hutch water is fed above the plunger than when fed below.

It should be said that as clearance increases, the action of the piston becomes less and less positive; for example, a jig with a heavy, tight, whole bed, will be less moved by a loose than by a tight-fitting plunger. The mill man who has a loose-fitting plunger overcomes this difficulty by giving it more movement. The advantage of a tight-fitting plunger is in the fact that it will recover quickly if overfed with heavy material, while the loose plunger will not, because the attendant would not be likely to give it the momentary added throw required.

§ 383. CONNECTING RODS. — The common practice is to use one connecting rod, running from the eccentric to the center of each plunger. This is screwed into a boss *G* on the lower side of the eccentric strap *F* with a lock nut *H* set up against the boss (see Figs. 184*a* and 184*b*), or the eccentric strap has an extension downward (see Fig. 171*c*) of two rods and a cross-bar. The eccentric rod is held to this cross-bar by nuts above and below it.

In exceptional cases, where the plunger is very long, two rods are used, or as in the Hodge jig there may be provided on the plunger vertical rods running in guides above.

§ 384. THE ECCENTRIC. — This must have the right throw to suit the work the jig is called upon to do, and as the work varies from time to time, the eccentric must be adjustable. The eccentric should have a graduated scale to show at once the amount of throw at which it is set. The eccentricity, to meet all emergencies, must be greater than that which is likely to be called for. It will be greater for the coarse products and less for the fine. The eccentric shown in Figs. 184*a* and 184*b* has a flanged eccentric wheel *C* with an eccentricity of $\frac{5}{8}$ inch, keyed to the shaft *A* at *B*. Fitted to the outer surface of this is a second eccentric wheel *D* also with eccentricity of $\frac{5}{8}$-inch and capable of being set in any position on the first, at which position it is held by two bolts *E* of which the heads take hold in a dovetail groove *L* in the flange. This combination allows a variation in the eccentricity from 0 to $1\frac{1}{4}$ inches, or in the throw from 0 to $2\frac{1}{2}$ inches.

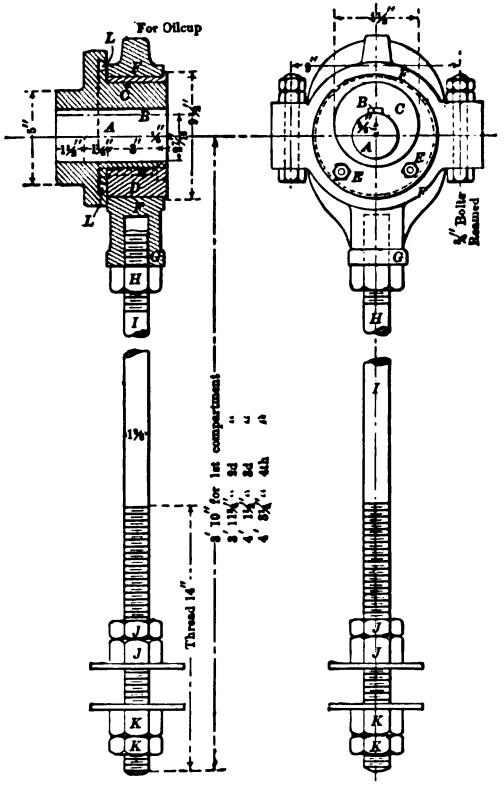

FIG. 184*b*. — SECTION. FIG. 184*a*. — ECCENTRIC AND CONNECTING ROD. ELEVATION.

A form commonly used, consists of a concentric disc keyed to the shaft with an eccentric disc held to its face by two bolts, one of which serves as a hinge for the eccentric disc to swing upon, while the other holds the eccentric disc when it has been swung off center to any desired throw. The eccentric disc requires in it two slots, one for the shaft, the other for the second bolt. The amount of throw is graduated on the edge of the eccentric disc with a pointer on the concentric disc and can be easily read.

§ 385. SHAFT AND PULLEYS. — There is generally one shaft running the whole length of the jig, which is supported upon boxes resting upon the timber frames, or more rarely upon special pedestal castings. The diameter of the shaft varies from $2\frac{7}{8}$ to 3 inches.

It is usual to drive jigs by tight and loose pulleys to avoid the interference

which would otherwise result from the stops which are needed for skimming, adjustment, or repairs. Where the use of the jig upon a given product is still in experimental condition, step pulleys for two or more speeds may be used to give quickly the desired change in speed. Cone pulleys are sometimes used for this same purpose. When, however, the most favorable speed has been determined, it is better, for simplicity, to use one size only of pulley for each jig.

§ 386. ACCELERATED MECHANISMS. — The early idea of jigging, as stated by Rittinger and others, was to have the whole bed lifted on the down stroke of the plunger, while on the up stroke it was allowed to settle back again in as nearly as possible still water. One of the methods of reducing suction in order to partially attain this end, has been by accelerated, or, as they are sometimes called, slow-return mechanisms; that is, mechanisms which give a quick upward motion of the water through the whole bed on the down stroke, and a slow return of the water on the up stroke. They are used to-day to some extent, especially on coarse jigs, the prevailing idea being that on fine jigs, which are run with a short stroke and a high number of strokes per minute, the difference between the accelerated mechanism and the ordinary eccentric is so slight as to cause no appreciable difference in the separation, and the added complications of the former render it objectionable. There are several ways of producing this acceleration, one of the most important of which will now be described.

§ 387. DIFFERENTIAL-MOTION VARIABLE-CRANK MECHANISM. — This motion

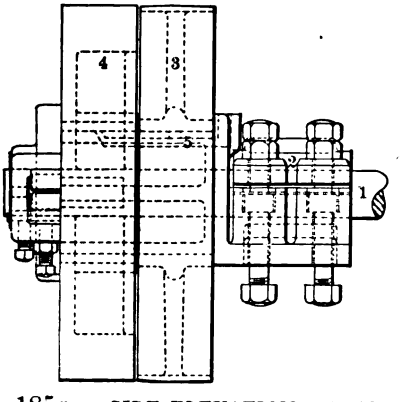

FIG. 185*a*. — SIDE ELEVATION. QUICK-RETURN MOTION MECHANISM.

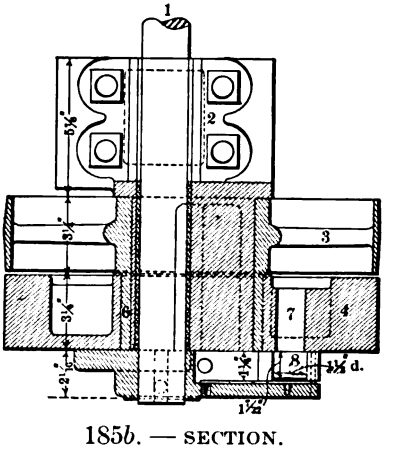

185*b*. — SECTION.

is employed on the Woodbury slime classifier and clean-up jigs as well as upon the Hodge jig used in the Lake Superior mills. Referring to Figs. 185*a* and *b* we have the shaft (1) supported by and running in the box (2). The lower part of the box is extended laterally forming an eccentric disc on which the pulleys (3) and (4) are free to revolve. An oil hole (5), permits of easy lubrication and the pulley (4) is provided with a bronze bushing (6). The driving pulley (4) has a crank pin (7) by means of which a differential motion is given the shaft (1) through the sliding block (8) and arm (9) keyed securely to the shaft (1). The action of this mechanism may be more readily understood if we look at the diagram in Fig. 186. In this diagram P represents the driving pulley, s, the shaft (1) of Figs. 185*a*, *b*, and *c*, c_1, c_2, etc., differ-

ent positions of the crank pin as the driving pulley revolves. Now let us suppose the pulley P to be revolving at a uniform speed. It is evident from the diagram that the pulley in revolving from 1 to 7 or $\frac{6}{16}$ of one revolution, will have caused the shaft s to have revolved one half a revolution, the other half revolution being caused by the revolution of the driving pulley from 7 to 16 and to 1 again. This gives to the shaft s an accelerated and retarded motion which is in turn conveyed to the jig plungers by means of plain eccentrics.

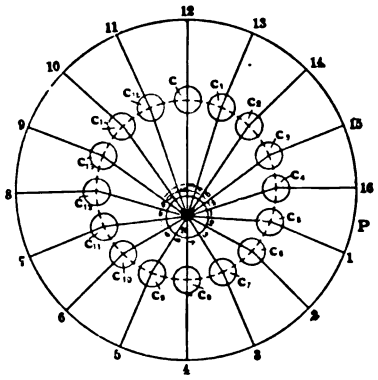

FIG. 186. — DIAGRAMMATIC REPRESENTATION OF ACTION OF DIFFERENTIAL-MOTION VARIABLE-CRANK MECHANISM.

The accelerated motion of the New Century jig has already been described.

§ 388. HYDRAULIC WATER. — This is usually put in above the piston and passes down through the clearance space between piston and lining. Sometimes the water is admitted directly to the hutches. In putting it below, one does not need quite so high sides for the plunger compartment and a tighter and more positive fitting plunger can be used. On the other hand, water beneath the plunger may bring in air bubbles which may give trouble under the plunger or sieve.

An idea has long existed that a jig, to do its best work, should diminish the suction due to the return of the plunger as far as possible, or in other words, a better separation would be obtained by allowing the mass of grains to fall back of their own accord as in quiet water, instead of having them sucked down by the returning current. There are several means of attaining this end, such as (1) introducing the water above the plunger and placing check valves in the plunger, which would open and allow the water to pass down through as the plunger rose, and close as it fell, or (2) introducing the water into the hutch beneath the plunger through a check valve in the opening leading to the source of supply, which valve would open and shut similarly to those in the plunger. The supply opening must be large enough to deliver water as fast as the rise of the plunger calls for it. Jigs working in this way may be called pulsion jigs. The pulsator jig is purely a pulsion jig. It makes very little or practically no hutch.

§ 389. SIEVES AND SIEVE FRAMES. — The sieves rest on and are supported by sieve frames. These may be either of wood or iron but are usually of wood. Wooden sieve frames consist of two ends and two sides of slightly less thickness than the lining. On account of the flexibility of wire-cloth and thin-plate screens cross-bars are necessary where these are used. These bars are of soft or hard wood and are placed crosswise of the screen and are usually vertical with their tops in the same horizontal plane as that of the frame. The screen is tacked upon these bars. Spare frames with screens tacked on are kept in stock so that when a screen gives out it may be quickly replaced. The cross-bars are about $\frac{3}{4}$ inch thick chamfered to $\frac{5}{8}$ inch at the top so as to avoid the creation of dead lines across the sieve.

The materials most used for jig sieves are punched steel plate and steel, iron, brass, copper, and phosphor bronze wire cloths. Steel plate has its advantages in coarse jigs but fine punched plate has too small a percentage of opening, the sharp edges of the orifices in steel plate reduce the flow of water up through

the sieve even more than the percentage of opening would imply. Wire cloth jig screens predominate. Very fine screens are sometimes supported by a coarser screen being placed beneath as in the pulsator jig. As to the choice of a screen after having decided upon the desired size of opening it may be said that whereas coarse wire would recommend itself on account of greater durability it gives a smaller percentage of opening and is subjected thereby to greater flexure and strain. It also has greater tendency to blind. Too fine wire will not hold its mesh and yields more quickly to corrosive action which is greater than actual abrasion. The medium must be chosen. The life of sieves differs greatly.

Taking an average of all the lives of sieves that have been obtained from the mills, we find: 108 steel sieves have 68.5 days average life; 177 brass sieves have 243.7 days average life; 39 copper sieves have 213.6 days average life. This suggests the fact that corrosion is much more effective in destroying jig sieves than is attrition, for if this were not so, copper would be the shortest lived and steel the longest.

Phosphor bronze, copper, and brass wire cloths are used where there is acid water to contend with.

In this country nearly all jig sieves are set perfectly level. Rarely sieves are set with a down hill slope to give more load toward the tail and counterbalance the overload at the head due to too rapid feeding. This may sometimes result in a more rapid treatment and higher capacity. Rittinger recommends a slope of from 5° to 8°. The slope if any should be greater for coarse jigs than for fine jigs. Coal jigs often use a down slope to increase capacity.

§ 390. METHODS OF FEEDING JIGS. — In most cases the material is fed to the jig at the head end of the first sieve and passes over it and the succeeding sieves.

It is important that the feed to jigs be steady. A jig with an automatic discharge for coarse concentrates, if fed irregularly, will, unless very carefully watched, when overfed, send good ore into the tailings and, when underfed, send waste into the concentrates, owing to the fact that these discharges are sluggish in responding to changed conditions; in fact, they cannot respond sufficiently to meet any considerable change. A jig which discharges its concentrates through a bottom bed, if overfed will send good ore into the tailings; if underfed it may send a little waste into the heads, but it is not so likely to do this as in the above instance.

The rate of feeding of jigs is controlled by the fact that they are nearly always fed from revolving screens, classifiers, or other jigs, all of which machines deliver their products at an almost uniform rate. The rate of feeding may also be controlled by the use of automatic feeders.

It is important, not only that a jig be fed regularly, but that the material be distributed over the whole width of the sieve, so that every part of the jig may have full jigging duty to do. It is also important that the feed material should come to the jig in a quiet, gentle manner, so as not to disturb the whole bed, as would be the case with a swift plunging current. To effect both these results, aprons or feed boxes are employed. The aprons used at Lake Superior are usually of wood, covered with $\frac{1}{8}$-inch iron plate, of the width of the sieve and about one and one-half times as long as they are wide, with a slope of 7°, or $1\frac{1}{2}$ inches to 1 foot, entering the sieve box exactly level with the top of the tailboard. This form has the advantage that it can distribute evenly and gently the mixed sand and water falling upon it. Steeper aprons, up to 45° slope, are shown in the catalogues of some of the large manufacturers, but the jigs could hardly be fed as gently with this form.

The feed box (see Fig. 171*a*), is a very common method of feeding the jig.

It consists of a little box S running across the head end of the jig outside, with an overflow slot cut in its side through which the sand flows to the whole width of the jig. The bottom of this slot is generally horizontal and level with the top of the tail of the sieve.

§ 391. DROP BETWEEN SIEVES. — The tailboard or partition between sieves, should always have a horizontal straight edge, in order that the waste sand may overflow with equal speed from all parts of the preceding sieve, and it should be beveled, sloping downward toward the following sieve, so as to clear itself freely, thereby forming the feed apron of that sieve. The almost universal construction is shown in Fig. 171*a*. The height of the tailboard above the sieve will be the measure of the depth of the whole bed. The height to be used depends upon the difference in the specific gravities of the valuable mineral and the waste, and upon the size of the grain. A greater difference in specific gravity, that is, an easy separation, requires less depth because the bottom bed holds its level better than when the difference in specific gravity is less. (See Figs. 187 and 188.)

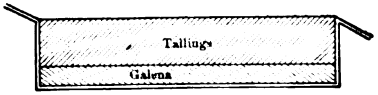

FIG. 187.

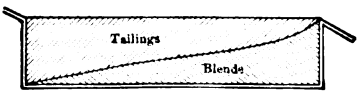

FIG. 188.

The coarser grain requires a greater height of tail than the finer, in order to have a sufficient number of particles in vertical column. A jig with a tail only 2 inches high, but jigging 2-mm. sand, would have a whole bed 25 grains deep. On the other hand, a jig treating 38-mm. lumps with a tail 6½ inches high, will have a whole bed only four lumps deep.

It is customary to have a descending scale, that is higher tailboards on the coarse jigs and lower on the fine jigs. The tailboards on Harz fine jigs are rarely less than 3½ inches high.

§ 392. SIZE OF SIEVE HOLE. — This affects jigging in other ways than by the percentage of opening already discussed. The larger the hole relatively to the feed, the more freely will the fine grains reach the hutch and the less will the whole bed be clogged by their presence. The practice in this matter may be expressed by the ratio of the diameter of the hole in the sieve to the diameter of the grains in the feed. In jigs that make little hutch this ratio is less than 1. Linkenbach recommends 1:2 for grains above 5 millimeters, 1:1½ for 3 millimeters, and 1:1⅓ for 2 millimeters. Practice shows ratios varying from 0.09 to 1.0. In jigs which yield hutch products as well as concentrates from side discharges the ratios for the diameter of the hole to the maximum grains of the feed, range from 0.08 to 1.3 and for the minimum grains from 0.93 to 1.4 on sized products and to infinity on other products. For consistency, the ratio for the maximum grain must be below 1.0 and that for the minimum above 1.0. It would seem best to have the ratio for maximum grains nearly equal to 1.0, as this secures large interstices and as free passage as possible, in which the suction may act. A jig of this sort needs a thicker bottom bed than does a jig of the former type because it must be run with strong suction. Jigs making but two classes of products, *i.e.*, tailings and hutch, should have the ratio greater than 1.0 on all products except the later spigot products of a classifier and the tailings of jigs, in order to let the concentrates through the sieve. On these two, however, it may be less than 1.0, owing to the fact that the concentrates are all in the finer part of the feed. No ratios are given on the later spigot products from the classifiers, as the data on the size of grains is too uncertain. On other products the

ratios range for the maximum grains from 0.6 to 2.3 and for the minimum grains from 1.6 up to 3.1 for sized products and up to infinity for other products. The ratio should never be large enough to allow the bottom bed material to pass through, probably never greater than 3.5.

Jigs of the latter two types in many mills use a larger hole in the first sieve than in the later ones, because the first sieve is called upon to make so much more hutch work than the others and, therefore, needs to work freely.

§ 393. MATERIAL OF BOTTOM BED. — The remarks in general under this head apply not only to the bottom beds which are put upon jigs, but to the bottom beds which naturally form on them. The bottom bed should be as nearly as possible of the same specific gravity as that of the concentrates; in fact, the same mineral should be used whenever possible. If much heavier, it requires excessive power to lift it and in that case causes excessive boiling of the top layer, and if it is not lifted, the quicksand effect of the bottom bed is lost. It is proper and customary to supply the earlier sieves of a jig with a bottom bed of the purest mineral and the later sieves which are used to remove the last particles which are the most difficult to catch, with a bed of middlings. If the bottom bed is of low specific gravity it refuses to remain level. (See Fig. 188.) This difficulty may be met either by giving the sieve a slight slope up hill toward the tail or by a couple cross partitions one-half inch or such a matter in height on each sieve. The bottom bed should not be composed of a soft mineral easily abraded, such as chalcopyrite. Lead shot and iron punchings are often used to replace galena, and pyrite has been used to replace chalcopyrite and blende. Magnetite makes an ideal mineral for this purpose. Feldspar is used in jigging coal. Jigs except those making only hutch and tailings are usually capable of making their own bottom bed.

The thicker the bottom bed is the less freely concentrates pass through into the hutch and the cleaner the hutch will be. With a thin bed the opposite is true. If the bottom bed is too thick particles that should have passed into the hutch are unable to do so and may be lost in the tailings. For an ore with a large percentage of concentrates we need a thin bed, and for an ore with small percentage of concentrates we need a thick bed.

The size of the bed grains affects the quality of the hutch product more than any other factor. Of course, the bottom bed will have large interstices and discharge the hutch freely; if fine, the reverse will be true. Ore particles will move freely in the interstices of the bottom bed when the diameter of the grains of the latter is 3.5 times that of the former. We can therefore regulate the hutch either by the depth of the bottom bed or by the size of grains composing it. A thinner, finer bottom bed may have the same rate of discharging as a thicker, coarser bottom bed, but the latter will have a thinner top layer, which is more advantageous when jigging very fine material.

When the bottom bed is extremely coarse, the interstices will be so large that it does not move during pulsion, and the interstices act like so many tubes, the specific gravity of the grains having no effect upon the operation. Under these conditions the jig simply acts by the law of hindered settling, and gangue is prevented from entering the hutch only by the application of sufficient hydraulic water. When, however, the interstices are smaller and the bottom bed rises, becoming liquefied (quicksand) during pulsion, then all the gangue is pushed above it, and if the bottom bed is thick enough, or the suction not too great, no gangue can come into the hutch.

For jigs which have bottom beds put upon them the ratio of the bed material to the feed averages about 2.9; *i.e.*, the maximum diameter of ore particle is to maximum diameter of the grains in the bottom bed as 1:2.9. On jigs that make their own bottom bed this ratio becomes 1, and these jigs will always

be tight unless the bed is kept thin, the sieve is coarse, pulsion is increased or hutch water increased.

§ 394. Removal of Coarse Concentrates. — This may be done in either of the two following ways:

(1) By skimming.

(2) By automatic discharges run continuously or intermittently.

(1) Skimming the Sieves. — To do this, the feed sand, the feed water, and hutch water are all shut off and the water drawn down till its top is below the level of the sieves. The spigots are then plugged. The top layer of gangue is now skimmed off and laid one side upon either a fixed or movable apron, by a hoe, the handle of which is cut off to about 1 foot long. Instead of a hoe, a bent piece of metal, 6 inches by 8 inches, may be used, and for the bottom bed, wooden skimmers are recommended by Linkenbach, to prevent injury to the sieve. If desired, a middlings product is then skimmed off and placed by itself. Then the concentrates are skimmed off and the sieve is cleaned, if necessary. This is done by scraping it with the edge of a spatula 2 inches wide and 10 inches long, of galvanized iron with rounded end, and by slapping it with the flat side. Then a small portion of the concentrates are put back for a bottom bed, the top sand is replaced, the hydraulic water turned on, and the feed started, the spigot plugs removed and jigging thus resumed. Sometimes a rough skimming is made quickly without stopping the jig. For example, on a 2-sieve jig the first sieve of which had automatic discharge and the second did not, the author has seen some of the coarse concentrates quickly skimmed from the second sieve, when the bottom bed became too thick, and transferred back to the first sieve to be discharged.

Even when no coarse concentrates are made it is frequently necessary to skim the sieves in order to clean them, as the sieves, especially of the finer sizes, become blinded periodically, that is to say, grains of ore become wedged into the meshes, preventing the passage of water or hutch product through them.

Skimming is not used nearly so much in American mills as automatic discharges. In the Freiberg district of Germany in 1892, out of 32 jigs, 26 used skimming, while 6 had automatic discharges.

Skimming has advantages over automatic discharge where there is a small proportion of concentrates, as it would be impossible under these conditions to regulate a continuous discharge. It may do better work than the discharge, because the attendant selects the quality of products desired; and again the sieve is cleaned and the bottom bed carefully readjusted at frequent intervals. The disadvantages are: the amount of labor required if there is a large proportion of concentrates, the time lost, the derangement of the mill work, and finally, the depth of the botton bed is too variable for the best work, beginning at smallest allowable thickness and increasing to the maximum.

Skimming is the rule in the native copper mills of Lake Superior, where there are but very few cases of automatic discharge, while it is the exception in all the other mills. In the former, the percentage of concentrates is not large enough, as a rule, for automatic discharges; the bottom beds of copper do not wear out and lose by attrition. The sieves need to be cleaned perhaps more often than with the brittle minerals. In the latter, the percentage of concentrates is, as a rule, much larger, so that continuous discharges may be easily run and the cost of labor and derangement of the mill from stopping to skim would be very serious.

§ 395. Automatic Discharges. — Several forms of automatic discharges have already been noted. The common gate and dam discharge used with Harz jigs will be discussed a little more in detail.

§ 396. GATE AND DAM DISCHARGES. (See Fig. 189.) — These consist of a dam A, with an opening B at a height C above the sieve, running in guides and adjustable as to height, and a gate or enclosure E so arranged that coarse concentrates, in order to pass out through B, must first pass under E. The theory of the apparatus is as follows: If G is the depth of the coarse concentrates, and H of the top layer outside the enclosure, and if C is the depth of coarse concentrates inside, then, owing to the fluidity of the bed, C will balance H and G, just as a shorter column of heavy liquid will balance a longer column of light liquid. For example, suppose quartz, specific gravity 2.6, and galena, specific gravity 7.5, are being jigged, and G and H each equal 2 inches. If a column one square inch in section is considered, the weight of a cubic inch of galena being 0.2700 pound and of quartz 0.0936 pound, then the column G weighs $2 \times 0.27 = 0.5400$ pound, and the column H weighs $2 \times 0.0936 = 0.1872$ pound, and the column $G + H$ weighs 0.7272 pound. The height of the column C of galena, necessary to balance $G + H$ is $\frac{0.7272}{0.2700} = 2.693$ inches. The apparent error in assuming both columns to be solid rock is eliminated by the fact that they are both made up of particles of approximately the same size with the same proportion of interstices.

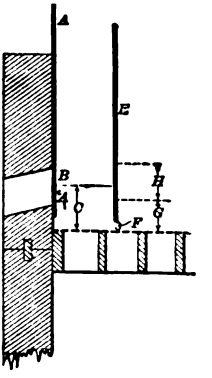

FIG. 189. — GATE AND DAM DISCHARGE.

It is essential that the concentrates in the pen C behind the gate E shall be loosened up and pulsated by the action of the plunger. This prevents the use of too small a pen in which the friction on the sides would hinder the loosening action of the plunger, and also prevents the placing of the dam outside the jig, where the concentrates would not be pulsated at all.

The liquidity of the bottom bed is such that it will approximately find its own level, and if galena comes to the sieve in the feed, the bottom bed G will increase in depth and the galena will rise above the height C and will overflow through B. Owing to this fact, this discharge is approximately automatic; for example, if galena ceases to come in the feed, the depth G decreases until the depth of the galena is equal to the height C and it ceases to overflow B. The condition under which it fails to be automatic is when C has been set low on account of a rush of galena, and it is followed by a cessation of concentrates. Then the top layer of gangue is almost certain to flow out under E into the concentrates.

TABLE 91. — RATIOS OF HEIGHT OF GATE TO THE DIAMETER OF THE MAXIMUM GRAIN OF THE FEED.

Ranges between which the Maximum Grain of Feed Lies.	Number of Sieves Considered.	Lowest Ratio.	Highest Ratio.	Average Ratio.
Mm.				
64 to 32	7	1.11	2.00	1.35
32 to 16	12	1.02	3.17	1.68
16 to 8	39	1.20	5.33	2.43
8 to 4	35	1.33	22.58	5.99
4 to 0	34	0.79	33.87	9.43

It is generally held by mill men that with heavy concentrates like galena or native copper, the liquidity of the bottom bed is so perfect that it matters not whether the discharge is placed on the side, the center, or on the tail end

of the jig, the flow of concentrates will be toward the discharge from all parts of the sieve. Where lighter ores, as blende, are concentrated, the concentrates layer *G* is much less perfect; in fact it is much thicker toward the tail, and in this case a discharge either at the side or center of the jig works less perfectly than one at the tail.

§ 397. HEIGHT OF THE GATE. — The space *F*, that is the height of the gate, must be just sufficient to allow the participles of coarse concentrates to pass freely beneath the gate. If the height is much increased, there is danger of gangue coming into the concentrates. The ratio which the height of the gate above the sieve bears to the diameter of the maximum grain of feed differs with the size. This is shown in Table 91. The lighter the specific gravity of the coarse concentrates the higher the gate should be above the sieve.

The height of the dam *C* must be regulated by trial. It must be low enough to keep the layer *G* from flowing over the tail of the jig, and yet not so low as to let gangue pass under gate *E* into the concentrates.

§ 398. REMOVAL OF TAILINGS. — The usual American practice is to allow the tailings to overflow the tailboard of the jig, the water washing them away in a launder. Sometimes the tailings are unwatered where further crushing is desired or further jigging, or where economy in water is desirable. Several dewatering devices applicable to this work are described under Chapter XV.

§ 399. THE NUMBER OF SIEVE COMPARTMENTS used in a jig depends upon the purpose for which the jig is to be used, the capacity required, and the ease of separation. It is common to jig very coarse products on one sieve in order to take out quickly whatever coarse free concentrates there is and send all the rest to be re-crushed. The next finer size may be treated on two sieves. For finer sizes, where the mineral is almost completely freed from the gangue, three, four, five, and even more sieves are the rule. The last sieve should be run with a light bottom bed in order to catch the last possible traces of fine free mineral. The hutch recovered from this cell requires re-treatment.

The capacity required of a jig will affect the number of sieves needed. Jigs required to do a large amount of work require more cells. This loading up may be easily overdone and two three-sieve jigs will certainly do better work than one six-sieve jig, the capacity remaining the same.

If the minerals in the ore occur in large crystals which separate easily from the gangue when the ore is crushed fewer sieves are needed than in the case of finely disseminated ores. A heavy gangue, as siderite, magnetite, epidote, etc., renders jigging difficult and necessitates more cells. Likewise minerals having small difference only in specific gravity require more sieves. Where there are more than two minerals to be separated one from the other more sieves are required than where but two minerals are to be separated.

§ 400. SIZE OF JIG SIEVES. — The wider a jig sieve is the greater is its capacity. Jigs treating coarse sizes may have wider sieves than can jigs treating fine sizes. In the latter case a very even distribution of the rising water currents is required, and this can be obtained more easily on a moderately narrow sieve. Coarse jigs have sieves ranging from 28 to 48 inches in width and fine jigs from 22 to 38 inches.

In regard to the lengths of the sieves, there is a decrease from coarse to fine. This is not, as in the case of width, due to difficulty of getting even distribution of pulsion. It may be to keep the proportion of length to width constant, and to do this as the width is diminished the length must be also.

There are two reasons for limiting the length of a single sieve, that is, for using two or more short sieves in place of one long one, which are of as much importance for coarse as for fine grains. First, the change in the whole bed,

due to the separation of a part of the concentrates, calls for changed conditions of pulsion, suction, and hydraulic water. This is done by ending up the sieve and passing the material over the tailboard to a new sieve. A further reason for limit of length is in the crawling forward of the bottom bed. When it is of medium weight, it is always thinner at the head of the sieve and thicker at the tail, tending to waste ore over the tail. A shorter sieve will have less difficulty in this way than a longer sieve. A series of sieves will give a chance for collecting, later, the ore grains which chanced to go over the tails of the earlier sieves.

The effect of length on capacity is to increase it within certain limits, as will be discussed later under that head.

Rittinger limits the length of jig sieves to 36 inches for coarse stuff and 24 inches for fine. Kunhardt gives 900 mm. (36 inches) for coarse and 700 mm. (28 inches) for fine. The maximum length found by the author was 48 inches on coarse jigs.

§ 401. CAPACITY OF JIGS. — By this is meant the quantity of crude ore that can be handled in a given time. It is influenced by a number of consideration which will now be taken up. The width of the sieve seems to be one of the most important of these. Other things being the same, the capacity is nearly in proportion to the width; a jig with double the width would have double the capacity. This is not quite true, since all jigs have a strip of about 1 inch width on each side where poorer work is done, and this counts more against capacity on a narrow sieve than on a wide one.

The capacity increases as the length increases, but not nearly in proportion thereto, and if longer and longer sieves were tried a length would soon be reached where further addition would gain nothing. The length of a sieve affects the capacity in this way: The act of jigging removes the mineral grains from the top layer and deposits them in the bottom bed of heavy concentrates. The concentrates are removed by automatic discharge or by passing into the hutch. The rate of settling of the mineral grains varies from the heavy, compact, pure, cubical grain, which settles from the top layer almost immediately, requiring perhaps only five or ten pulsions and suctions, to the flat scales and the included grains which settle slowly, requiring a large number of strokes. It follows that the longer the sieve the more of these grains will be caught, but, on the other hand, each additional inch of length catches less than the previous one, while it calls for its full quantity of hydraulic water. To partially overcome this difficulty is one of the reasons for using a series of sieves, instead of one very long one, for where a series of sieves is used the hydraulic water, amount of throw, depth of the bottom bed, and other adjustments can be varied to suit the conditions in that stage of the separation. As a rule, the second sieve receives less hydraulic water and less pulsion and depends more on suction, the third more still, and so on. In this way the series of sieves gives a series of products graded in quality from rich to poor.

If a jig is overdriven, the head end simply becomes solidified by the grains which come faster than the jig can assimilate them, and the whole of the hydraulic water has to come up near the tail end, causing violent boiling and ruining the work of the jig. Great length of sieve aggravates this condition. With coarse work this fast feeding may become allowable by using longer stroke of the plunger and more hydraulic water, but little can be done in the way of increasing capacity on the fine jigs, because the longer stroke is not allowable, neither is greatly increased hydraulic water.

The area of the sieve surface is an important factor in the capacity of jigs, as, within certain limits, the length and width are probably to some extent interchangeable, that is to say, the capacity is proportional to the area, and

it is not improbable that a sieve 24 × 24 inches (576 square inches) would give as good or better results than a sieve 19.2 × 30 inches (576 square inches), on the same quantity of ore, owing to the more deliberate rate of working and the more even bottom bed due to the shorter sieve. The manufacturer, however, if making a sieve 24 inches wide would probably make it 40 inches long, more or less, and thus gain the capacity due to length and area. This is probably because it costs more to make a wide jig than a long one and a wide jig necessitates a taller structure.

The coarse jigs have higher capacity than fine jigs. This is because of the longer plunger movement which causes a particle to settle farther in a stroke and because of the lesser number of grains in a vertical column. The richness of the ore and ease of separation, regularity or irregularity of feed, also have their effects. Jigs will average showing a capacity of from 0.5 to 2 tons per square foot of sieve area per 24 hours.

§ 402. POWER. — Power required by jigs is expended in the work of lifting the sands, drawing the returning water down, and in friction. The power expended in drawing the returning water down while little at the beginning of the return stroke increases until it becomes one of the greatest elements in the total consumption of power. The power required depends upon the area of the sieves, the height of the tailboard, the specific gravity of the material handled, and the length and number of strokes per minute.

The horse-power requirement has been given by manufacturers as 1½ horse-power for a 1-sieve jig, 2 horse-power for a 2-sieve jig, 2½ horse-power for a 3-sieve jig, 3 horse-power for a 4-sieve jig. To this 15% is added for friction of shafting, slip of belts, etc.

§ 403. THE SIZES JIGGED. — The coarsest size jigged depends mainly upon the perfection with which the mineral is unlocked. Jigs are seldom used to-day for sizes finer than 1½ millimeters. Tables of the Wilfley type are in most cases handling the products finer than this size. As to the range of sizes treated the following general statements may be made.

Close sizing always has the advantage where it is desired to do very perfect work, for when it is used the whole bed is very open and free for the passage of water, and in consequence a very perfect layering takes place, and when the concentrates are of rather low specific gravity, or there is a considerable amount of included grains or middlings of low specific gravity, such products may be saved to better advantage.

Sieve scales of many of the mills have larger gaps in them at the coarse end than would perhaps be allowed for the best separation, because the whole tailings of the coarser jigs go to re-crushing machines to unlock the included grains, and then to reconcentrators. The few grains, then, which may find their way into the first tailings, because the sieve scale is not sufficiently close to save them, all have a chance to be saved later. The loss from re-crushing these few grains is insignificant, while the saving of multiplication of trommels and jigs to gain a perfect sieve scale may be very large.

When jigs are treating either classified products or natural products, there is a tendency of fine mineral to go into the tailings, and by increasing the suction in order to prevent this as far as possible, some of the fine gangue is also sucked down into the hutch product. The reason why this is allowed is one of expediency. The jig making hutch work is a very efficient machine; that is to say, it does a large amount of work and saves a large proportion of the fines for the amount of mill floor it covers. Its use, therefore, saves cost of mill construction and mill men have not had at hand any better means of handling this material. If some means can be devised for sizing accurately at 1 mm. or better 0.75 mm., sending all above this size to jigs and all below it to tables of the

Wilfley type, then this difficulty will be overcome. We have already seen how this is accomplished in the case of the pulsator jig.

The last hutch product of a jig which has to handle fine material with the coarse must always carry considerable gangue if the tailings are to be brought down to the lowest limit, and this product will need further treatment to bring it up in value.

§ 404. HYDRAULIC WATER QUANTITY. — In general, jigs treating coarse stuff require more water than those treating fine stuff, because larger grains settle faster and because water can pass up in a small number of large interstices with much less friction than in a large number of small interstices, even though the total sectional area may be the same in both cases, and because larger discharge orifices are required above and below.

The variation in the quantity of hydraulic water is more used for regulating the jigging from hour to hour than any of the other three frequently used adjustments, viz.: rate of concentrates discharge, thickness of bottom bed, and in some cases the rate of feed.

Some of the considerations which affect the work are as follows: Increase of water decreases suction and lessens the hutch product; decrease of water increases suction and with it the amount of hutch product. Again, increase of water increases pulsion, while decrease diminishes it. When sized products are jigged, the less the suction the better; hence a larger quantity of hydraulic water, if it can be afforded, will make the jig work quicker and better. When sorted products are jigged, much suction is desirable; hence, hydraulic water will naturally be diminished. When first spigot products or natural products containing mixed sizes and gravities are jigged, a conflict of interests occurs. The presence of large grains of heavy mineral makes for little suction and much hydraulic water, while the presence of fine ore makes for much suction to draw it down into the hutch. A usual compromise seems to be to use rather a large throw to the plunger to get the suction, and rather a large quantity of hydraulic water to soften up the whole bed and favor the settling of the large grains. In other words, to pay more attention to the fines than to the coarse because of the two the coarse grains can best take care of themselves. Probably the best plan of all is to use a sieve and added bottom bed so coarse that the whole concentrates shall go into the hutch and then run the jig with diminished hydraulic water and strong suction.

In regard to the water quantities to be used, exact rules cannot be given, because the quantity of water will depend upon the area of the sieve, the number of sieves, the quantity and quality of the ore fed, the number and length of the strokes and the height of the tailboard. The final regulation must be according to the appearance and feeling of the whole bed as previously described under length of stroke.

The questions of number and length of throw having a direct bearing on the theory of jigging will be discussed in the following articles.

THEORY OF JIGGING.

As was stated at the beginning of this chapter the work of hydraulic jigs depends upon the action of two currents of water, an upward and a downward, alternating with each other in quick succession. The upward current causes pulsion and the downward current causes suction. The arrangement of grains due to pulsion is in accordance with the laws of hindered settling explained in a previous chapter.

§ 405. PULSION. GENERAL PRINCIPLES. — It has been clearly demonstrated both by the author and other investigators that under the reaction of pulsion with mixed sizes of grains of different specific gravities certain definite positions

are established according to diameters. Thus in the case of quartz and galena, R. P. Jarvis, using galena having a specific gravity of 6.6 and quartz with a specific gravity of 2.62, has determined this diametral ratio to be 5.8 to 1. The author's latest determination, using galena with a specific gravity of 7.5, and quartz with a specific gravity of 2.64, is 6.9 to 1, which, taking into consideration the greater specific gravity of the heavy mineral, is practically the same as the ratio obtained by Mr. Jarvis. All the work that has been done by the author, and the very complete series of test made by Mr. Jarvis, indicate conclusively that in order to effect a perfect separation by pulsion alone, the grains should be sized between the limits of the hindered-settling ratios. Under these conditions and with the proper pulsion velocity the separation is complete. If the minerals are not sized, or are not sized within the proper limits, the separation cannot be complete, but a definite arrangement of grains will result and equilibrium will be attained when the grains are arranged in accordance with their hindered-settling ratios.

§ 406. PULSION JIG TESTS OF HINDERED SETTLING. — Having obtained the hindered-settling ratios for a continuous current, as explained under the chapter on Laws of Screening and Classification, it was next necessary to ascertain if an intermittent, pulsating current would produce any variation therefrom. To test this question, a pulsion jig was designed, which is shown in Fig. 190. It consists of a tin funnel, *a*, with overflow, *b*, connected with rubber connector, *c*, to a glass tube, *d*, cut apart at *h* for the insertion of a disc of sieve-cloth. The two parts are held together by two clamps, *e* and *f*, and two bolts, *g*, *g*, and the joint, at *h*, is made tight by a belt of rubber plaster. The tube has a branch, *k*, joined by a rubber connector, *o*, to a common plug-cock, *p*, provided with a gear-wheel, *q*, which intermeshes with a larger gear, *r*, having a crank, *s*, turned by hand. Water is supplied through the rubber hose, *t*, and the hydrant, *u*. The lower end of the tube is drawn down to 6.35 mm. in diameter at *l*, and by rubber connector, *m*, is joined to a bulb, *n*, for receiving what passes through the sieve.

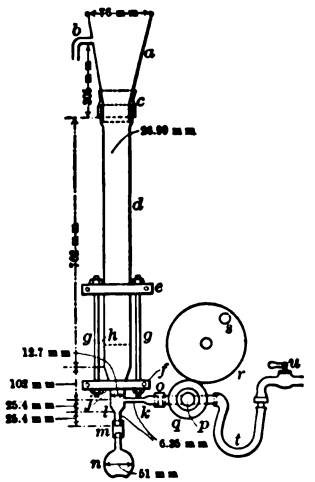

FIG. 190. — PULSION JIG.

The method of operating this pulsion jig is simply to turn on the water gently at *u*, and revolve the crank, *s*, at the speed desired. The revolution of the plug-cock, *p*, makes and breaks the water connection, and the rubber tube, *t*, is elastic enough to act as an accumulator for the instant that the water is shut off. The sand fed in at the funnel, *a*, quickly falls to the sieve, *h*, and then receives a series of intermittent upward pulsations from the movement of the water. The sand is therefore subjected to an upward current of water at one instant, which remains stagnant the next instant. These pulsations may be given at any rate up to 800 per minute.

The results obtained demonstrated that the same ratios exist that were found to exist with a continuous rising current acting under hindered-settling conditions.

§ 407. PULSION VELOCITY. — The full-teeter velocities given in Table 88 may be used to determine the proper pulsion velocity suited to any particular case in hand. H. S. Munroe gives a formula $V = 0.833\sqrt{D(\delta - 1)}$ where V = velocity in meters per second, D = diameter in meters, and δ = specific gravity of the mineral in question. This formula may be safely used for com-

puting the mean plunger velocities of jigs within the range of sizes usually jigged. It cannot, however, hold below the ranges in which Rittinger's formula applies, and probably fails to hold even before that limit is reached. It may be written for convenience, $V = 26.32 \sqrt{D(\delta - 1)}$ where V and D are given in millimeters rather than in meters. This formula gives substantially the same figures for full-teeter velocities as those given in Table 88. As the result of a considerable number of experiments in which the piston speeds during pulsion and suction were not the same Mr. Jarvis concludes that the best results are obtained by properly balancing the two. The eccentric giving equal mean velocities yields about as good results as any of the accelerated strokes, at least within the range of sizes (2 mm. to 0) treated by Mr. Jarvis.

This question of pulsion velocity has a very direct bearing upon the number and length of strokes required. In general, the greater the number of strokes, the greater will be the capacity of the jig, but a certain time is needed for developing the full effect of the stroke and this limits the speed. The time needed is less for a short stroke than for a long one and, consequently, the jigs with short strokes use a larger number of strokes per minute. The number of strokes is usually determined when the mill is designed and no definite rule can be given. Table 92 shows, however, what the practice is.

TABLE 92. — SUMMARY OF THE NUMBER OF STROKES OF JIGS FOR DIFFERENT SIZES OF FEED.

Maximum grain of feed lies between these Diameters.	Number of Jigs Considered.	Number of Strokes per Minute.		
		Lowest.	Highest.	Average.
Jigs in which the maximum size fed is known.				
Mm.				
64–32	6	95	175	129
32–16	12	100	175	131
16—8	38	80	250	144
8—4	30	115	268	176
4—2	31	130	350	235
2—1	14	135	400	250
1—0	3	210	384	281
Jigs in which the maximum size fed is unknown, being fed by later spigots of classifiers. The size given is that fed to the classifier.				
16–8	3	120	160	147
8–4	4	180	210	197
4–2	35	140	400	237
2–1	12	141	315	213
1–0	2	250	400	325

The length of stroke is adjustable and the mill man usually changes the same until he gets satisfactory results. It is possible, by applying Munroe's formula, to compute the proper length of stroke for a jig running at given speed and treating material the size of maximum grain of which is known. Munroe's formula gives the mean plunger velocity. The mean plunger velocity may be defined as the average distance traversed by the plunger per second; for instance, if a plunger makes 100 thirty-millimeter strokes per minute it travels $100 \times 60 = 6000$ mm. per minute, or the mean plunger velocity is 100 mm. per second. Let us suppose that we have an ore with quartz gangue (specific gravity 2.64), that our jig makes 100 strokes per minute, and that the feed is through 6.00 mm. on 4 mm., by applying Munroe's formula we have $V = 26.32 \sqrt{6(2.64 - 1)} = 82.5$ mm. per second. The required mean plunger velocity is then 82.5 mm. per second or 4950 mm. per minute. If the plunger makes 100 strokes per minute it must traverse at each stroke 49.50 mm., or the required length of stroke is 24.75 mm. or very nearly 1 inch.

Considerations which affect the amount of throw are as follows:

(1) The coarser the grains, the greater must be the throw, because coarse grains settle faster than fine grains and require a higher velocity of current and a greater quantity of water to lift them.

(2) The heavier the grains, the greater the stroke should be, for the same reason as in the last case.

(3) A deeper bottom bed or higher tailboard on the jig will generally call for a longer stroke, because there is more resistance to be overcome.

(4) If the amount of clearance space around the plunger is large, a longer stroke will be needed than if it is small, to make up for the leak.

(5) A plunger that is smaller than the sieve will require its stroke lengthened in proportion to the diminution; half the size will require twice the stroke.

(6) If there is any constriction in the water passage between the plunger and the sieve, as in the Collom jig, a longer stroke will be required to overcome the resistance.

(7) We may say in a general way, the less hydraulic water used, the longer must be the stroke, but since hydraulic water contributes to pulsion and subtracts from suction, while increased stroke contributes to both pulsion and suction, it follows that increasing the hydraulic water is not equivalent to increasing the stroke.

Table 93 gives some details of American practice.

TABLE 93. — SUMMARY OF THE LENGTH OF STROKE OF JIGS.

The Maximum Grain of Feed Lies between these Diameters.	Number of Jigs Considered. (1st sieve only.)	Diameter of Maximum Grain in Feed.			Length of Stroke on First Sieve.			Ratio of Average Stroke to Average Size of Grain.
		Highest.	Lowest.	Average.	Highest.	Lowest.	Average.	
Jigs in which the maximum size fed is known.								
Mm.		Mm.	Mm.	Mm.	Mm.	Mm.	Mm.	
64 to 32	5	54.0	38.1	41.67	101.6	38.1	67.94	1.63
32 to 16	11	25.4	18.0	21.56	89.1	25.4	49.95	2.32
16 to 8	33	16.0	8.3	11.75	69.8	12.7	36.48	3.10
8 to 4	26	8.0	4.4	5.81	43.4	9.5	23.47	4.05
4 to 2	28	4.0	2.1	3.03	41.3	1.59	14.34	4.73
2 to 1	13	2.0	1.22	1.71	19.1	3.97	12.27	7.18
1 to 0	3	0.91	0.64	0.73	6.35	3.97	4.76	6.52
Jigs in which the maximum size fed is unknown, being fed by later spigots of classifiers. The size given is that fed to the classifier.								
16 to 8	3	11.1	11.1	11.10	38.1	19.1	27.51	2.48
8 to 4	3	4.5	4.5	4.50	25.4	15.9	20.12	4.47
4 to 2	33	4.00	2.3	2.91	38.1	0.79	10.15	3.49
2 to 1	12	2.00	1.22	1.89	12.7	3.17	7.41	3.92
1 to 0	2	0.91	0.64	0.77	6.35	1.59	3.97	5.15

§ 408. SUCTION, GENERAL PRINCIPLES. — This term is used to define the period when a water current is passing down through the sand resting on the sieve of a jig. This down current will carry with it any particle that is small enough to pass through the interstices between the larger grains; but the arrangement which these grains have derived from the previous pulsion exercises controlling effect upon the work that suction is to do.

It has been shown already that the higher its specific gravity, the smaller will be the diameter of a grain of mineral which, under hindered-settling conditions during pulsion, is adjacent to and in equilibrium with any given grain of quartz, and therefore the easier will the former pass down through the interstices between its associated quartz grains, when the suction of a downward current begins to act upon it.

Carrying this line of argument still further, one sees that if it can be proved that the size of the interstices between the quartz grains bears a certain definite

ratio to the diameter of the quartz, in fact that there is a definite interstitial ratio, then as a consequence, the heavy minerals can at once be divided into two groups, according to their behavior under suction: (1) Those higher gravity minerals, the diameter of which under hindered-settling conditions is smaller than the interstices between the adjacent quartz grains. (2) Those lower gravity minerals, the diameter of which under hindered-settling conditions is larger than the interstices between the adjacent quartz grains; or, in other words, those minerals the hindered-settling ratios of which are (1) greater than, (2) less than, the interstitial ratio of quartz. The minerals of the first group will be easily sucked down by the descending current and pass through the jig sieve into the hutch below. The minerals of the second group will be more difficultly drawn down.

§ 409. THE AUTHOR'S TESTS ON SUCTION. — In order to throw light upon the relation of the hindered-settling ratio to the interstitial ratio, and to bring out any other facts which might come to light, a little, movable-sieve jig, shown in Fig. 191, was designed. It consists of a glass tube, *a*, *a*, *a*, *a*, 127 mm. long, 32 mm. in bore, which is cut at *t*, *t*, into two parts, 102 mm. and 25.4 mm. long respectively — the 102 mm. being above the sieve; a disc of sieve-cloth, *t*, *t*, is inserted between them; the parts are held together by the wooden bars *b*, *b*, and the bolts, *e*, *e*, with nuts, *d*, *d*. Power is transmitted through the rod, *h*, *u*, the beam, *j*, oscillating upon a pivot, *k*, a connecting-rod, *l*, a small pulley, *m*, with crank-pin, a belt, *n*, and a large pulley, *o*, driven by a crank, *p*. The cross-bar, *f*, and the lock-nuts, *g*, *g*, are used simply to stiffen the rod, *u*. The jig is suspended in a glass jar, *s*, with water level at *r*. By turning the crank, *p*, an oscillating motion up and down is given to *l*, received by *u*, and transmitted to the jig-sieve, *t*, *t*. The amount of oscillation may be controlled by connecting *u* with *j*, by means of any of the holes, *i*. The smallest oscillation was 3.2 mm.; the largest, 159 mm. The latter was preferred for the tests.

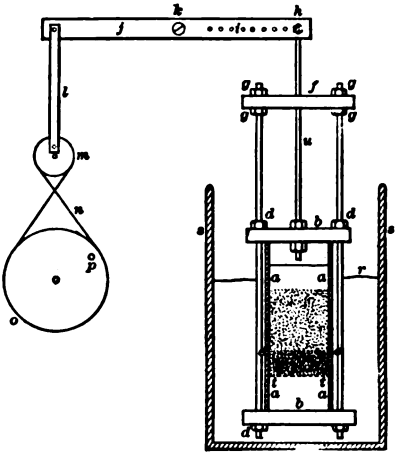

FIG. 191. — MOVABLE-SIEVE JIG.

By means of this jig and of the pulsion jig (Fig. 190), already described, the effects of pulsion and suction were studied in three different combinations, namely, pulsion with much, with little, and with no suction.

1. *Pulsion with Much Suction.* — When the jig (Fig. 191) is run with the glass tube elevated 38.1 mm. above the surface of the water at the lowest point of its stroke, the jig operates during the first few pulsions as a lift-pump, elevating the surface of the water within its tube until the inside water-level is perhaps 25.4 mm. above the outside level, the sand-particles acting like so many little valves. Thus it reaches equilibrium, and, from this time on, the suction due to the downward rush of water must be equal to the pulsion due to the upward rush of water. The whole bed of the jig so run is tight and only slightly mobile. The strong suction compacts it more or less. Mobility may be partially restored by using a long stroke.

2. *Pulsion with Little Suction.* — When the jig (Fig. 191) is run with the glass tube inundated to a depth of 22.2 mm. below the surface of the water at the lowest point in its stroke, then, during the downward movement of the sieve, a full pulsion movement is given to the water as it passes up through the

sieve, and the sand settles through it. But, on the upward movement of the sieve, the sand settles in the sieve, and comparatively little suction results from the inertia of the water. The reason is, that there is a free discharge of the water at the top of the glass tube. Here we have pulsion with little suction. The whole bed of the jig run in this way is loose and very mobile. There is not enough suction to compact it. A shorter stroke suffices for mobility than in the case of much suction.

3. *Pulsion with No Suction.* — When the pulsion jig (Fig. 190) is used upon mixed sands, it matters not whether we revolve the cock rapidly, giving rapid, small pulsions with short intervals of repose, or more slowly, giving fewer and stronger pulsations with longer periods of repose — the result is the same. The sands are treated by pulsion without suction. The whole bed of this jig is extremely loose and mobile, there being no suction to compact it.

TABLE 94. — JIGGING QUARTZ AND SPHALERITE (BLENDE).

Diameter of quartz in mm Diameter of blende in mm	1.735 1.735	1.735 1.090	1.735 0.665	1.735 0.495	1.735 0.241	1.735 0.107
Series 1, with much Suction.						
Pulsions needed for separation Percent. of blende brought down	2,129 96	1,676 95	1,759 95	297 95	208 99	288 99
Series 2, with little Suction.						
Pulsions needed for separation Percent. of blende brought down	306 99	838 99	846 100	1,382 98	1,729 97	Infinity * 0
Series 3, with no Suction.						
Pulsions needed for separation Percent. of blende brought down	147 98	202 95	496 ‡ 50	Infinity † 0	Infinity † 0	Infinity † 0

* The sphalerite all floated up.
† Not tried; the sphalerite would undoubtedly have nearly if not quite all floated up.
‡ No more would come down.

In all the tests upon jigging now to be described, unless otherwise stated, the stroke of the jig was 15.9 mm., the layer of quartz was 51 mm. thick; the layer of the added mineral to be separated from the quartz, was 4.76 mm. deep, and placed on top of the quartz. A 16-mesh sieve was used in the jig throughout the tests. The rate of the pulsations varied somewhat, but the mean was a little over 300 per minute. In each test, the number of pulsations necessary to settle the heavy mineral was counted, and the percentage of the latter settled was estimated by the eye. These last two values served for comparing the tests. A high number of pulsions indicates difficult separation; a low number indicates easy separation.

A series of tests was made with quartz and blende, to note the behavior of six different sizes of blende, paired one at a time with a standard size of quartz, under conditions of much suction, of little suction, and of no suction. The results are given in Table 94.

On examination of these results, one sees first, that much suction gives very difficult separation on the three coarser sizes of blende, and very easy on the three finer sizes. There is, in fact, an extraordinary break between the two diameters of blende, 0.665 mm. and 0.495 mm. To what does this point? Clearly the 0.495 mm. grain is fine enough to be rapidly drawn down through the interstices, while 0.665 mm. is not. The author considers that this measures approximately the size of the interstices in quartz of 1.735 mm. diameter to be 0.495 mm., showing the quartz grains to be $\frac{1.735}{0.495} = 3.50$ times as large

as the interstices between them. That is, the interstitial ratio of the quartz is 3.50.

The reader may well say here that there is nothing to indicate that grains of blende between 0.495 mm. and 0.665 mm. will not be readily sucked down between grains of quartz 1.735 mm. diameter, and consequently that the figure 3.50 may be too large. Time was not available to answer this question, and rather than to make any assumption, the author prefers to consider 3.50 as the interstitial factor.

Secondly, with no suction, the first two sizes of blende show easy jigging, while the last four make little or no separation.

Thirdly, little suction is much like no suction, differing from it only in the fact that on the coarse grains, jigging is not quite so easy, and on the fine grains, jigging is not quite so difficult.

A similar series of tests was made upon quartz and galena, to note the behavior of six different sizes of galena paired, one at a time, with a standard size of quartz. The results are given in Table 95.

TABLE 95. — JIGGING QUARTZ AND GALENA.

Diameter of quartz in mm Diameter of galena in mm	1.735 1.735	1.735 1.090	1.735 0.665	1.735 0.495	1.735 0.241	1.735 0.107
Series 1, with much Suction.						
Pulsions needed for separation Percent. of galena brought down	257 100	302 100	748 98	337 99	190 100	86 100
Series 2, with little Suction.						
Pulsions needed for separation Percent. of galena brought down	95 100	384 100	153 98	210 99	153 100	354 *
Series 3, with no Suction.						
Pulsions needed for separation Percent. of galena brought down	18 100	50 100	58 98	368 95	368 *60	Infinity. †

* The more cubical grains apparently went down and the flatter grains floated up. † Not tried, as the galena would undoubtedly have all floated up

On examination of these results, one sees that galena is of such high specific gravity and the separation takes place so easily that the rules laid down above do not apply with the same force as with the blende set, but yet they sufficiently corroborate those rules to let them stand for heavy as well as for light mineral. We notice little suction is everywhere superior to much suction, except on the very finest size, where much suction is more rapid and more effective. No suction is extraordinarily rapid on the three coarse sizes, but falls away on the fourth, and breaks down entirely on the two finest sizes.

The author also found that by jigging with much suction, small grains of quartz (0.495 mm. and less), can be drawn down through the interstices between large grains (1.735 mm.), of the same mineral, while jigging with no suction forces them up to the top of the bed.

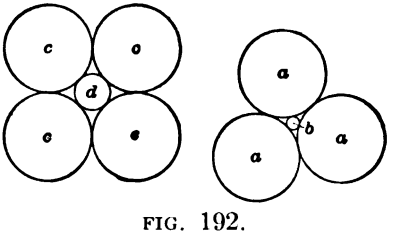

FIG. 192.

The author, in considering the interstitial ratio, sought some geometrical representation to picture the small grain of concentrates passing through interstices between the large grains of quartz. In Fig. 192 the diameters of the spheres of quartz a, a, a, will be 6.50 times that of the ore, b, when the ore can slip between the quartz, while the diameters of the quartz spheres, *cccc*,

will be only 2.44 times that of the ore, *d*. The interstitial ratio obtained for quartz, 3.50, makes the space smaller than *d*, but larger than *b*.

§ 410. FINAL CONCLUSIONS. — To sum up all of the preceding tests on hindered settling and suction, they clearly point to the following rules of jigging:

(1) For jigging closely sized products, to get the highest speed of separation, use as little suction as the water supply will permit.

(2) For jigging classified products where the hindered-settling ratio is equal to or larger than the intersitital ratio, or in other words, where the concentrates are smaller than the interstices between the grains of the gangue, use suction.

(3) For jigging classified products where the hindered-settling ratio is less than the interstitial ratio, or in other words, where the concentrates are larger than the interstices between the grains of gangue, use suction.

(4) For jigging mixed sizes and gravities, natural products, or products not closely sized, suction is suitable, as no suction fails to save the finer sizes.

The amount of suction required in each case must be studied out upon the spot. In general, No. 3 will probably require a little less suction than No. 4, and No. 4 a little less than No. 2. In this connection see § 409 in regard to the effect of suction in hardening the whole bed.

The degree of sizing needed as preparation for jigging, if we are looking for the most perfect work, depends solely upon the hindered-settling ratio of the minerals to be separated. If the ratio is above 3.5 (assuming this value to be sufficiently proved), then sizing is simply a matter of convenience. The fine slimes would, of course, be removed; and, if it is more convenient to send egg-size, nut-size, pea-size, and sand-size, each to its own jig, the suitable screens should be provided for this purpose, and a hydraulic separator for grading the finer sizes. But if, on the other hand, the ratio is below 3.5, then the jigging of mixed sizes cannot give perfectly clean work, and the separation will be approximate only. To effect the most perfect separation, close sizing must be adopted, and the closer the sizes are to each other, the more rapid and perfect will the jigging be. There may be conditions where the jigging of mixed sizes of this class will be considered sufficiently satisfactory, as an expedient, under the circumstances.

In the light of the foregoing work, it is not possible, owing to the variable effect of suction, to calculate, theoretically, sieve scales which depend upon the differences in specific gravity of minerals to be separated; that is, it is not possible to give an exact range of sizes within which separation is easy and beyond which it is difficult.

§ 411. BRING'S TESTS. — In order to study the action of downward and interstitial currents on a jig, Bring proceeded as follows: To determine the influence of the down-going currents Bring made use of an ordinary continuous jig. A sieve with 7-millimeter holes was used with a bed of 8 to 10-millimeter grains. The material to be jigged had passed through a 5-millimeter screen, but was otherwise just as it came from the crusher. The tests were carried on with limestone of 2.72 specific gravity, granite of 2.60, and magnetite of 5 as testing material. In all his experiments Bring found that the grains of magnetite in the hutch product were of larger diameter than the grains of limestone. He, moreover, reaches the following conclusions:

(1) Increased thickness of the bed causes decreased "hutch," with less diameter and smaller factor (the ratio of the diameters of the heavier and the lighter material).

(2) Increased size of the bed grains causes greater amount of hutch, lower percentage of metal in the hutch, greater diameters, but smaller factor.

(3) Decreased quantity of testing material causes increased amount of hutch, greater diameters, and smaller factor.

(4) With more limestone in the crude mixture there is a lower percentage of concentrates in the hutch, larger diameters, and larger factor.

(5) With more magnetite in the mixture: greater percentage of metal, smaller factor.

(6) Smaller size of limestone: more hutch, lower percentage of metal, less diameter of the magnetite grains, but larger of the limestone grains, less factor.

(7) Increased number of revolutions: more hutch, higher percentage of metal, less diameters, and a considerably increased factor.

(8) Increased length of stroke: more hutch, higher percentage, larger diameters, and larger factor.

(9) Increased specific gravity of the lighter material: increased diameter, smaller factor.

(10) Elimination of the fine limestone grains: less hutch but a greatly increased percentage of metal.

Finally Bring concludes that in a modern jig the up-going and down-going currents cause the separation. In the coarse jig the former have the greater influence; in the fine jigs, the latter.

It cannot be denied that the European practice of sizing the ore to a very high degree before jigging is now slowly changing, as it has been found that it only complicates the plant without being of any benefit, particularly if the difference between the specific gravities of the minerals to be separated is great. For this reason it seems best to offer a little further explanation of the action which takes place in the act of jigging.

TABLE 96. — COMPARATIVE POSITION OF QUARTZ AND GALENA GRAINS IN A JIG BED AT INSTANT OF PULSION.

Size mm. Average Grain Galena.	Size mm. Average Grain Quartz.	Current Velocities at Full Teeter mm. sec.
.....	.175	5.22
.....	.22	6.11
.....	.26	7.28
.....	32	10.19
.....	.41	14.41
.135	.....	15.05
.175	.....	19.50
.....	.51	19.86
.....	.63	24.60
.....	.76	28.10
.22	.....	30 5
.26	.....	30.8
.....	.91	33.0
.....	1.04	36 4
.....	1.19	42.6
.41	.....	45.7
.51	.....	44.9
.63	.....	47.8
.....	1.37	53.3
.76	.....	59.8
.....	1.55	60.3
.....	1.85	61.5
.91	.....	65.0
1.04	.....	66.1
1.19	.....	72.0
.....	2.28	72.8
.....	2.66	72.8
.....	2.83	78.4
.....	3.53	86.0
.....	4.17	92.8
1.37	.....	97.1
1.55	.....	100.4
1.85	.....	116.5
2.28	.....	181.0
2.66	.....	177.2
2.83	.....	190.0
3.53	.....	218.4
4.17	.....	229.6

Let us look for a moment at Table 96. In the first column of this table

we have a series of sizes of galena grains expressed in millimeters, the full teeter velocities of which are given in column three. In the second column we have the same series for quartz. Now let us for the moment imagine that we have these grains on the sieve of a jig, the sieve having, let us say, openings 1 millimeter in diameter. It has just been stated that the author has determined upon 3.50 as the best value that can be given for the interstitial ratio, that is to say, 1-millimeter grain of quartz is the largest grain that can be sucked through the interstices between 3.50-millimeter grains of galena. In other words, if we imagine the grains at the moment of pulsion poised in the order shown in the table we shall see that the galena grains from 0.91 millimeter down will be sucked through the sieve, leaving on the sieve as a bed the galena grains larger than 1 millimeter in size. Now the interstitial space through which the quartz grains can be sucked is virtually the space between the 1-millimeter grains of galena, as at the moment of suction the bed becomes quickly compacted. This then means that the largest grain of quartz that will be sucked through into the hutch is somewhere in the neighborhood of 0.3 millimeter in diameter. A grain of this size may get through into the hutch, since the heavy galena grains are the first to settle, and there are innumerable chances for the 0.3-millimeter grains to get beneath the larger quartz grains at the moment of suction.

If now we apply this reasoning to the conclusions arrived at by Bring, we are able to see the reasons for the results which he has obtained.

§ 412. Effect of Jig Bed. — From the last paragraph it is clear what effect bedding will have upon the result. Any portion of the ore column which remains fixed during the period of pulsion presents merely a mass of irregular tubular channels variously inclined. The result of thickening or thinning the bed, or of increasing or diminishing the size ratio between bedding and feed, is self-evident. Thickening the bed makes it more difficult for suction to do its work. Thinning the bed has the opposite effect. An increase in the size ratio between bedding and feed grains means larger and freer channels through which material may be sucked into the hutch. A decrease of this ratio has the opposite effect. The shape of the ore particles constituting the bed also has an important effect, as will be apparent. Any part of the bed which is free to pulsate may be considered as part of the ore column and amenable to all conditions applying to the reaction of pulsation. The work done by Bring shows these points very well.

§ 413. Sizing Before Jigging. — The general practice of the day seems to tend toward a more general application of the English system; that is to say, toward the use of the jig in the treatment of unsized material instead of the hydraulic classifier. While the treatment of material sized between wide limits is possible and thoroughly practicable, still the advantages resulting from a preliminary sizing cannot be denied. In the English system itself, when the hutch products of one jig are treated upon another, we are making use of a preliminary sizing. Again, in order to jig an unsized product suction is necessary to effect a separation, and suction, as has been stated previously, results in cutting down the capacity enormously. This point is nowhere better exemplified than in the case of the pulsator jig described in a previous article. The arguments that have been advanced for the adoption of the English system on the ground that equal-settling ratios, many times larger than those obtained under free-settling conditions, exist on a jig bed, have been amply disproved. It may be stated that both systems have distinct advantages and that the method adopted will depend largely upon the particular conditions existing in each case.

The jigs used for coal washing will be described in the chapter devoted to that subject.

CHAPTER XII.

FINE-SAND CONCENTRATING.

§ 414. The devices used in concentrating fine sands, or material which is too fine or for various reasons is not treated on jigs, and too coarse for slimers to successfully handle, are so numerous and varied that a great many different methods of classification have been used by various authors. For our purpose, however, it would seem that the broadest and, at the same time, the most simple classification is best suited. On this account the author has selected the following:

I. Concentrators with the separating surface stationary.

II. Concentrators with the separating surface in motion.

§ 415. GENERAL PRINCIPLE OF CONCENTRATION. — As has already been hinted the specific gravity of minerals and the size of the grains are two of the most potent considerations which are made use of in all concentrators, whether dry or wet methods are employed. Of these, specific gravity comes first, and the size of grain second, in importance. Taking a given ore, for example, if all the particles are of practically uniform size and are allowed to fall through water, the sorting power of the water will arrange the particles falling through it in layers according to their specific gravities, the lightest grains, being the slowest to settle, will always be nearer the top; the heaviest, settling the fastest, will always seek the bottom; while between the top and bottom will be found various grains of intermediate specific gravities. This principle is exemplified in every concentrator and method of concentration taken up in this chapter, and the student, in order to properly comprehend the work which follows, should have a thorough understanding of the application of this principle to ore dressing as explained in Chapters IX and X.

I. CONCENTRATORS WITH THE SEPARATING SURFACE STATIONARY.

§ 416. Concentrators of this type are rather crude and inexpensive to construct and operate and, although they often do not make a high recovery of the values, they are used to a considerable extent in this country and abroad. Sometimes they are the only concentrators used at a property, and at other places they merely precede or supplement the work of some other concentrator. They are all fed and discharged alternately, making of them intermittent devices. In principle they have agitation by a water current flowing over an uneven surface, the heavier particles settling into catch pockets, while the lighter pass on. The chief devices coming under this head are riffles and their application to sluices, undercurrents, strakes, and carpet and blanket tables.

RIFFLES.

§ 417. The term *riffles* has been used indiscriminately, to designate either the blocks placed in a trough or sluice to hold back heavy minerals, or to designate the pockets between the blocks. In the following pages the pockets are called the riffles, and the blocks are called riffle blocks. When a stream

of water, carrying sand and gravel, passes over riffles the agitation due to the current softens up the deposit, and the quartz, being lighter, rises and is carried along by the current, while the heavier minerals, including gold, platinum, precious stones, garnet, and black sand, mostly remain in the riffles.

Riffles find their principal use in hydraulic mining, which is so large a subject that it requires a treatise of its own. The author will, however, describe some of the forms of riffles and the ways in which they are used in ore dressing.

In general the design of sluice and riffle block which most systematically combines spaces of quick current followed by spaces of comparative rest (eddies), often repeated, most successfully fills the requirements. The eddies, however, must not be too quiet or they will fill with quartz at the start and never change.

FORMS OF RIFFLES.

§ 418. TIMBER RIFFLE BLOCKS are square wooden blocks 8 to 13 inches high, set on end in rows across a sluice or trough. Each row of blocks is separated from the next by riffle strips 1¼ inches thick and 2 to 3 inches wide, nailed to them. (See Fig. 193.) They are held in place by wooden wedges against the sides of the sluice. Bowie states that these riffle blocks are better than all others where timber is not too dear, and that the cross riffle they make is not excelled by any other form. In choosing wood he prefers that which is long grained and brooms up well. Hard timber which wears smooth, such as oak, is not desirable. Nut pine is best, and pitch pine answers all requirements.

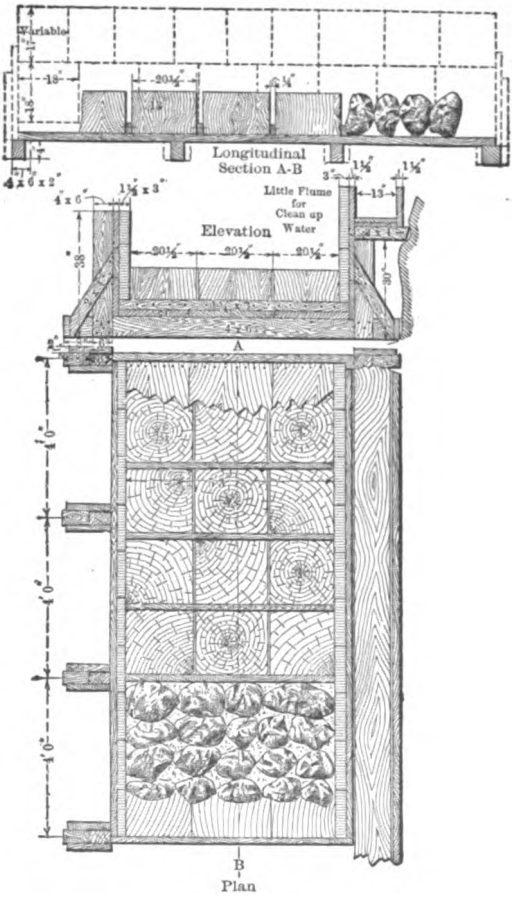

FIG. 193. — RIFFLE SLUICE (FROM BOWIE).

§ 419. ROCK RIFFLES do good work. They are made by placing cobble stones on end and close together in a sluice, the tops of the stones being pointed slightly down the slope. To keep the rocks in place, a cross plank is placed in the bottom of the sluice every 6 or 8 feet. In some cases rock riffles have been preferred to timber, but they take longer to clean up and to re-set. They require a steeper grade than block riffles.

§ 420. BAR RIFFLES are made by putting cross bars in the bottom of a sluice. Blocks or bars 1 to 2 inches high are common practice, but the spaces vary greatly (from an inch or two to several feet). It has been found that the form shown in Fig. 194*a* is much more efficient for separating gold from quartz and black sand than the form shown in Fig. 194*b*.

A modification of the *Robinson riffle* is shown in Fig. 195*a*. Each riffle is 12 inches wide, 12 inches long, and about 3 inches deep in the middle. These riffles have been successfully used in a cyanide leaching plant to catch the

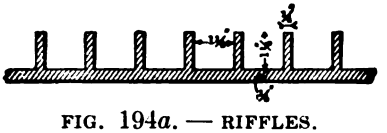

FIG. 194*a*. — RIFFLES.

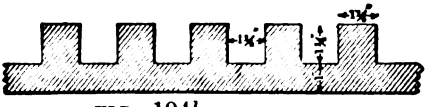

FIG. 194*b*. — RIFFLES.

coarse gold in the tailings, by means of mercury placed in the riffles at *A*, the sulphurets collected at *B*. At this same plant the original form of Robinson riffle (Fig. 195*b*), allowed the sulphurets to collect and pack at *B* so that the free gold could not come in contact with the mercury at *A*.

§ 421. COCOA MATTING has recently come into considerable prominence in connection with the recovery of gold from modern river and other placer deposits. The gravel is first screened, usually in a trommel running on rollers and provided with an internal spray pipe. The screen sends the coarsest gravel to waste, and generally separates the remainder into two or more sizes which then pass over long rectangular tables upon which the matting is laid. The coarsest gravel delivered to the tables varies from a maximum of 1½ inches to ½ inch diameter or less. In order to catch any gold that may sift through the matting, cotton or linen cloth is laid under it. The matting is held in place by side cleats which are fastened with wedges. To aid in catching the gold, expanded metal riffles are commonly laid on the matting. In some cases wire netting is used instead of expanded metal.

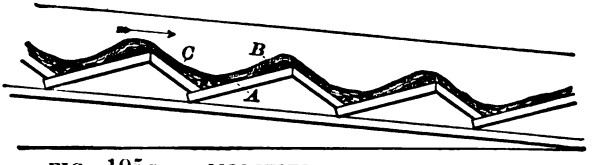

FIG. 195*a*. — MODIFIED ROBINSON RIFFLE.

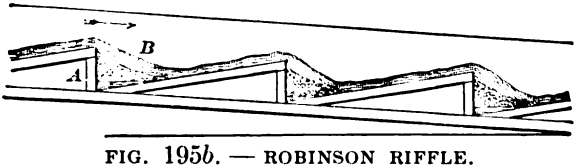

FIG. 195*b*. — ROBINSON RIFFLE.

The method in general use for cleaning consists in taking up the mats and cotton, and rinsing them in a tank of water. When sufficient washings have accumulated, they are carefully re-treated on a table covered with plush, baize, blanket or matting, and the gold that is finally rinsed from these is collected by panning, either with or without mercury.

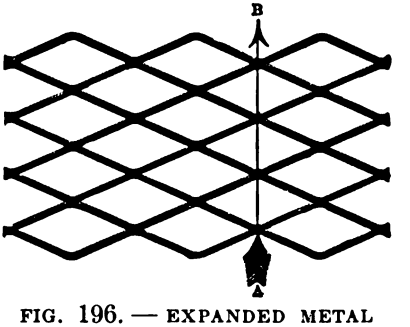

FIG. 196. — EXPANDED METAL RIFFLES.

§ 422. EXPANDED METAL RIFFLES (Fig. 196) are very commonly used on gold dredges in connection with cocoa matting. The usual size for this purpose has meshes 4½ inches long, and 2½ inches wide, and is made of steel about 0.08 inch thick. It is laid on top of the cocoa matting after the latter is spread on the inclined tables, and is found very efficient in arresting the gold. The flat surfaces of the metal strands slope about 45°; and to be most effective, the tops of the strands must be pointed down the slope. They have but little catching power when laid the opposite way.

APPLICATION OF RIFFLES.

§ 423. THE SLUICE, as the term is used in placer working, is both a trough for transporting water and gravel, and a concentrator for catching and holding, by riffles, any heavy grains the gravel may contain. (See Fig. 193.)

Many forms of riffle blocks have been used in sluices and their designs are usually governed by three considerations: (1) The first cost and life; (2) the effectiveness of the riffles; and (3) the ease with which they are cleaned up and re-set.

Bowie gives the grade of a sluice at 2° 25′ to 2° 35′. In some places where much clay is to be washed off 3° 35′ to 4° 45′ is used, and a minimum grade of 1° to 1° 10′ has been used. His figures on sizes and carrying power of slimes are as follows:

Depth.	Width.	Grade.	Capacity in Miner's Inches of Water.
36 inches.	6 feet.	2° 15′ to 2° 50′	2,000 to 3,500
30 "	4 "	2° 15′	2,000
30 "	3 "	0° 50′	600 to 1,000

The riffle blocks used in sluices may be hung or suspended from above as well as supported and when such are employed they are usually made of silver-plated copper plate and covered with mercury to catch the gold as an amalgam. The riffles of a sluice are often all filled with mercury to catch any particles of free gold, which may occur in the pulp, as an amalgam. When used at the end of amalgamating plates their purpose is to catch particles of rusty gold which have escaped the plates and in this case the first few are skimmed several times a day for rusty gold. The mercury is taken from the remainder periodically and filtered through chamois skin, the amalgam saved, and the mercury put back into the riffles after they have been swept clean of all heavy grains of concentrates.

A sluice handling coarse material which has only been screened in preparation is usually cleaned up once or twice a day by diverting the pulp to another sluice, flooding with wash water for a time to wash out some of the gangue, removing the riffle blocks or bars, and cleaning out the concentrates and amalgam. The concentrates are often hand-cleaned in pans or cradles. (See § 428 and § 429.)

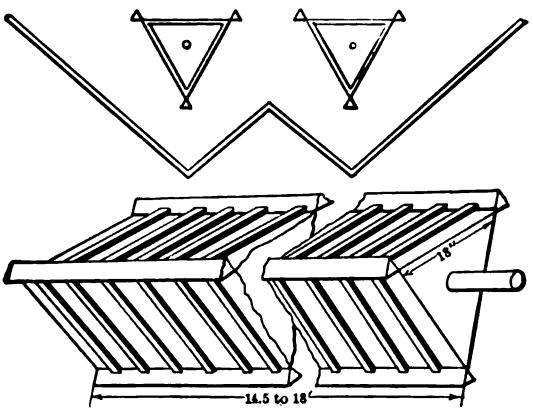

FIG. 197. — REVOLVING RIFFLE STRAKES.

§ 424. UNDERCURRENTS. — Where it is desired to treat the finer portion of the gravel more quietly than in the main sluice, a small grizzly is placed in the bottom of the sluice and the water and fine gravel passing through this are treated at a gentle speed on "undercurrents," which consist of wide sluices containing riffles. The undercurrents should be eight to ten times the width of the main sluice and have a grade of 4° 30′ to 5° 45′ (8% to 10%).

§ 425. REVOLVING STRAKES. — In Minas Geraes, Brazil, a device for rapidly discharging riffles is used. This consists of a triangular prism with equal faces, each of which is a riffle sluice supplied with cross riffle bars and side retaining walls. (See Fig. 197.) This prism has end trunnions of hard

wood upon which it can revolve. The pulp current is distributed at the upper end by a wooden sliding bridge, and running over the riffles is discharged at the lower end. When the riffles are charged with auriferous sulphides they are discharged by revolving the prism to wash off the sulphides and to bring the next face into line, the pulp being momentarily shut off and the sliding bridge withdrawn. The width of each face is 18 inches, the length 14½ to 18 feet. It slopes 1 inch per foot (4° 45′). The riffle bars are 0.14 inch high, and there are many of them. Two of these prisms are hung in one tank which is in section like the letter W. This tank, filled with water, washes the riffles and receives the concentrates.

§ 426. CARPET AND BLANKET TABLES. — Some mills place a table covered with Brussels carpet or woolen blankets after the amalgamating plates. Often these tables are merely a continuation of the amalgamating table itself and have the same slope. The carpet or blanket is from 3 to 4 feet long, as wide as the plate, and is loosely tacked on so that it may be easily removed. They catch excess mercury and foul amalgam escaping from the plates and included grains, rich concentrates, and rusty gold from the pulp. The blankets or carpets are carefully removed and rinsed in a tank of water every few hours according to the richness of the ore. The tailings from the tables go to other concentrators while the concentrates may be sacked and shipped to the smelter or still further cleaned up by hand pans or in a batea before being shipped.

II. CONCENTRATORS WITH THE SEPARATING SURFACE IN MOTION.

This class of concentrators may be subdivided into the following heads:
(*a*). Those with an intermittent feed and discharge.
(*b*). Those with a continuous feed and discharge.

(*a*). CONCENTRATORS WITH THE SEPARATING SURFACE IN MOTION AND HAVING INTERMITTENT FEED AND DISCHARGE.

§ 427. Machines of this type are of rather old design and use mechanical agitation to stratify the pulp and discharge the lighter material. Although cheap to construct and easy to operate they have served their purpose by saving many tons of values and are still used to some extent. Of course new and improved methods are gradually driving them to isolated districts. We have only two machines in this class; the cradle or rocker, which is an adaptation of riffles, and the mechanical batea.

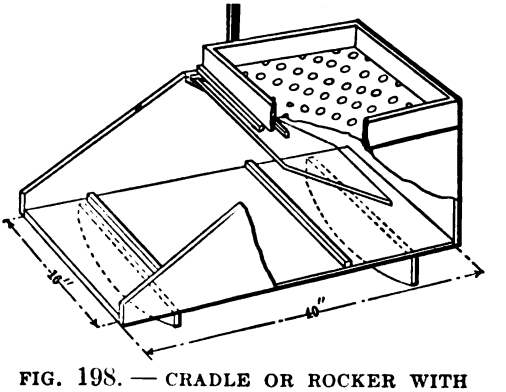

FIG. 198. — CRADLE OR ROCKER WITH PART OF SIDE CUT AWAY.

§ 428. THE CRADLE OR ROCKER (Fig. 198) is a box about 40 inches long and from 16 to 20 inches wide, mounted on transverse rockers, and having the back end closed and the front end open. The sides slope up from the front toward the back end to a height of 12 to 20 inches. A screen box 16 to 20 inches square and 4 to 6 inches deep, having a perforated screen with ½-inch holes, is set on top at the back end. Beneath this is a backward sloping baffle board, or an apron made of canvas or of blanket. On the bottom of the cradle are two riffle cleats about ¾ inch high, one near the middle and one near the lower end.

The method of working is to shovel gravel into the screen box, and to pour in water from a dipper while rocking the cradle by hand. The apron throws the screenings backward, and when it is made of canvas or blanket it catches some of the fine gold. The coarse gold is caught in the bottom riffles. The sand quite easily packs in these riffles if the rocking is not kept up, and this leads to loss of gold. For convenience in cleaning up, the screen box and apron can be lifted out. What is caught on the apron and in the riffles is washed in a hand pan to remove the last of the sand. The cradle is a regular tool for washing auriferous gravel on small scale; and is also used to clean up sluices and quartz mills.

§ 429. THE MECHANICAL BATEA is used for washing away the fine, light stuff from the charge of the clean-up barrel in amalgamating mills and for cleaning up the material collected on blankets at the foot of amalgamating plates. It is a pan 36 inches in diameter, with the bottom a spherical surface having its center 4 inches below the margin. The pan has vertical sides 4 inches high, with an annular rim 1¼ inches wide, extending horizontally inward from near the top of the sides, to prevent slopping. It is suspended by three rods 12 feet long with turnbuckles for leveling. The pan receives a gyrating motion by a central crank beneath, with a radius of 1½ inches, and makes about 40 revolutions per minute, requiring about 1 horse-power. The discharge nozzle, which is held between guides, prevents the pan from revolving. The charge is fed periodically at one side, and the light stuff overflows at the opposite side, through a nozzle whose sole is level with the bottom margin of the pan. Wash water is fed to it constantly and, periodically, it yields: (*a*) Overflow to amalgamating plates and (*b*) residue to hand pan for further cleaning or to smelter.

(*b*) CONCENTRATORS WITH THE SEPARATING SURFACE IN MOTION AND HAVING A CONTINUOUS FEED AND DISCHARGE.

§ 430. Concentrators of this type are among the most important of all. Development in certain machines of this class has been so rapid and phenomenal during recent years that it has, in a sense, revolutionized ore dressing. All the machines belonging in this group utilize mechanical agitation to separate the grains into layers, the heavy concentrates grains going to the lower layer, and the lighter waste grains into the upper. Movement of the separating surface advances the concentrates either parallel with or at right angles to the flow of water. The flow of water carries the tailings down the slope either across or with the line of motion of the concentrating surface. This class includes the end-bump tables, the jerking tables, and the vanners.

END-BUMP TABLES.

§ 431. THE GILPIN COUNTY CONCENTRATOR OR BUMPING TABLE is a continuous working bumping table, with cam, spring, and bumping post. The heavy and light minerals are separated into layers by the agitation, and are propelled up the slope of the table by the bumping action, but the wash water carries down the surface quartz at a higher speed than the bump can send it up.

The tables are generally mounted in pairs, each single table being 85 inches long and 18 inches wide. Occasionally single tables are used. The lower 68 inches is a flat surface, sloping about ⅜ inch per foot, while the upper 17 inches rises by a concave cylindrical surface to a height of about 2 inches above the plane of the flat surface. About 3 inches at the upper edge is curved downward for the discharge of the concentrates, the lower edge also being curved down to discharge the tailings. A pair of tables is suspended from

four cast-iron posts by vertical rods, which have knife-edge bearings. The slope is varied by means of lock nuts on the suspending rods. The posts are bolted to two longitudinal sills, which are, in turn, bolted to four cross sills, three of which are placed at the head of the tables. In the center, at the head end, the bumping block is strongly bolted to the head sills. Between the tables is a heavy buffer rod, on the tail end of which is the tappet for the cam. At the head end it is shod with iron to strike the bumping block. On the two tail posts is a shaft with a driving pulley and a two-armed cam which pulls the table toward the tail end; at release a flat spring in front of the cam pushes the table toward the head end. The bumping block stops the motion suddenly, causing all particles on the table to slide up hill. Side motion of the table is prevented by the posts or by diagonal stay rods. The surface is made of cast iron, steel or copper plates. Cast iron is said to give the best catch, but is very heavy. With cast-iron surface, the shaking part weighs 1,100 pounds, with copper 700 pounds, with steel 600 pounds. Sometimes an amalgamated copper surface is used, which serves to catch a small amount of gold.

The ore is fed by a box distributor across the junction between the curved and flat parts. Wash water may or may not be used. When used, it is distributed across the table just below the top crest, so that a small amount of wash water will go over with the heads.

The table receives from 120 to 180 shocks per minute. The length of the movement is 1½ inches to 3 inches, the length decreasing as the number of strokes increases. A single table will treat from 4 to 5 tons in 24 hours.

These tables must be fed with whole pulp without any previous classification. On classified stuff they separate the minerals into layers all right, but the discharge of the heads is impeded, owing to their fineness, because there are no coarse grains of heavy mineral to drag up the fine ones; and on very fine pulp it fails entirely. The maximum size of grain fed to them is generally between 40 mesh (about 0.35 mm.) and 80 mesh (about 0.15 mm.). They are used considerably in Colorado where they are often placed at the foot or under the amalgamating plates. They have also been used in some of the mills of Missouri and South Dakota.

JERKING TABLES

§ 432. Jerking tables not only utilize all the principles of action given in § 430, but they also use riffle grooves or cleats which are long, narrow, and parallel to each other, and may be produced, either by tacking on cleats, or by cutting grooves in wood, or casting grooves in rubber, metal or other surfaces. The riffles may be tapered, their tip ends being in a diagonal line with the longest groove or cleat on the tailings side of the table and extending the whole length of the deck; or they may all be of the same length, ending in a straight line before reaching the concentrates side of the table; or they may all extend to the concentrates side. In any case the cleats are usually tapered and sometimes they are broader at both sides and narrower in between. The jerking or shaking motion may be produced by eccentrics, toggles, and springs; by eccentrics alone; by cam, spring, and bumping post; and in various other ways. In any case the backward movement should be more rapid than the forward. This motion is in the direction of the riffle grooves and impels the grains toward the concentrates side of the table, giving a greater movement to the under concentrates grains than to the upper waste grains. Water flowing down hill across the grooves washes the upper waste grains down the slope of the table much faster than the under concentrates grains. The line along which the concentrates and tailings grains part company is usually a diagonal line, and when the tip ends of the riffle cleats end in a diagonal line this becomes the line of separa-

tion. In other cases, however, this line is usually formed by a flexible bend in the deck itself. This class of tables is probably the most important of all the concentrators described in this chapter. Their success has been phenomenal and their capacity and efficiency is due largely to the riffles.

§ 433. The Wilfley Table will be taken to illustrate this type chiefly because it was one of the first successful tables, has been greatly improved since its first appearance, and is one of the best known, there being over 12,000 in use to-day. While the author will use the Wilfley table as an example the student should not for a moment consider that this is the only concentrator of this type which has met with favor, for there are certainly many others possessing great merit, and some of the better points in other tables of this class will be explained in the description, but without reference to the particular table to which it belongs. It is proper to say, however, that the tables of this class which use a cam, spring, and bumping post to give the motion are not in popular favor to-day, and one of the chief reasons lies in the disintegrating effect of the bump upon the mill building.

§ 434. WILFLEY TABLE. — The original Wilfley table was made by Arthur R. Wilfley, and in May, 1896, was used by the maker in his mill at Kokomo, Colorado. The first table sold was installed in August of the same year, in the Puzzle mill, at Breckenridge, Colorado. The latest type, known as Wilfley No. 5, is illustrated by Fig. 199 and may be described as follows:

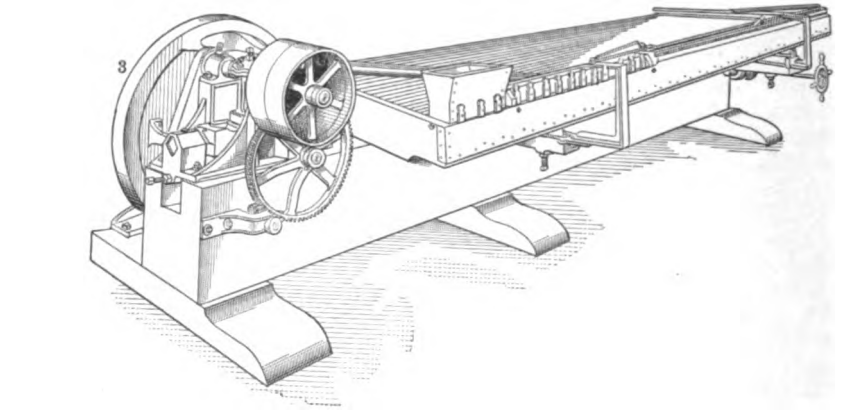

FIG. 199. — NO. 5 WILFLEY TABLE.

NOTE. — For the sake of uniformity of description, the upper side of the table is here called the feed side; and the lower side is called the tailings side; the side where the concentrates are discharged, the concentrates side; and the side to which the mechanism is attached, the mechanism side.

§ 435. *Foundation.* — As the deck of the table vibrates about 240 times a minute, it is necessary to provide a substantial support for the same which is sufficiently rigid to confine the vibrations to the deck. The success of the table depends largely upon the smooth deck action in the plane which has been found best adapted for the ore treated. The support of the Wilfley table is a solid beam of Oregon pine 12 × 16 inches in cross-section and 15 feet long. To this beam are bolted the driving mechanism, two iron chairs which hold the tilting frame, and three strong timber legs. The spring of the wood securely holds the bolts in place. This support is ample in all respects and, when securely bolted to a solid foundation, does not vibrate when the deck is in action.

Some tables have the sill or base frame made of iron channel bars or I-beams which are very good for the purpose. Other tables are suspended rather than supported.

§ 436. *Head Motion.*— The driving mechanism of the No. 5 Wilfley consists of a crank shaft, a pitman *P*, and two toggles *A* and *B*, as shown in Fig. 200. One of these toggles acts between one side of the pitman and an abutment *C* which is bolted to the foundation sill; the other toggle acts between the other side of the pitman and the yoke *D*, which is connected by a thrust rod and two nuts to the table top. Motion is imparted to the table deck by the pitman, driven up and down on the crank, acting through the two toggles, which are held in train by the spring *E*. The function of the spring is to take up loose motion in the toggles and should be kept in the lightest tension possible

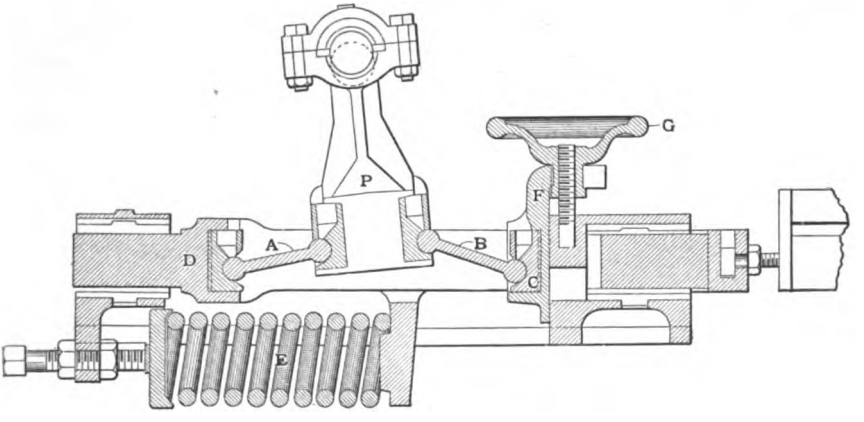

FIG. 200. — WILFLEY TABLE HEAD MOTION.

to accomplish this. The spring causes no part of the motion. The entire movement, including the elevator (see § 439), is self-contained and mounted upon a cast-iron base. The framework is securely bolted to the girder, making lost motion impossible. The wearing parts are made of a hard, chilled iron, the lower box being adjusted by one set screw. The main bearings upon the eccentric shaft are adjusted and tightened by means of a set screw. Ample oil reservoirs are provided on all bearings and the boxes are constructed grit proof.

The velocity of the table deck varies with the length of stroke and the speed of the crank shaft. When the toggles diverge most from a straight line, the motion is most rapid; while the motion is slowest when the toggles are in a position nearest to a straight line. The result is that the deck reverses its direction with a maximum velocity at one end of the stroke of the pitman and with a minimum velocity at the other end of the stroke. It is this quick return which causes the progression of the pulp. The table receives an accelerated motion to the right when the pitman rises, and a retarded motion to the left when the pitman descends; and this action carries the ore particles from left to right; that is, from the mechanism side toward the concentrates side of the table. The ideal jerking motion would be uniformly accelerated during the forward movement and uniformly retarded during the return. This mechanism closely approximates the ideal, for if the crank circle be divided into twenty-four equal parts, the amount of motion for equal times, when running at 240 revolutions per minute, and with a ¾-inch stroke, will be:

Time.	Movement of Crank.	Movement of Table. Inches.	Time.	Movement of Crank.	Movement of Table. Inches.
$\frac{1}{30}$ second.....	0- 1	0.000 forward.	$\frac{1}{30}$ second	12-13	0.035 backward.
" "	1- 2	0.005 "	" "	13-14	0.080 "
" "	2- 3	0.025 "	" "	14-15	0.115 "
" "	3- 4	0.035 "	" "	15-16	0.120 "
" "	4- 5	0.050 "	" "	16-17	0.110 "
" "	5- 6	0.085 "	" "	17-18	0.095 "
" "	6- 7	0.110 "	" "	18-19	0.090 "
" "	7- 8	0.115 "	" "	19-20	0.045 "
" "	8- 9	0.130 "	" "	20-21	0.030 "
" "	9-10	0.110 "	" "	21-22	0.025 "
" "	10-11	0.060 "	" "	22-23	0.005 "
" "	11-12	0.025 "	" "	23-24	0.000 "

The diagram of this stroke, together with a longer and a shorter one, is shown in Fig. 201.

Considerable variation in the energy of the throw can be brought about by an adjustable sliding piece *F* on the abutment which elevates or depresses the end of the toggle *B*. This piece is adjusted by means of a hand wheel and screw *G*. When the divergence of the toggles is increased the jerk is stronger, and when decreased the throw is weaker, the speed remaining constant.

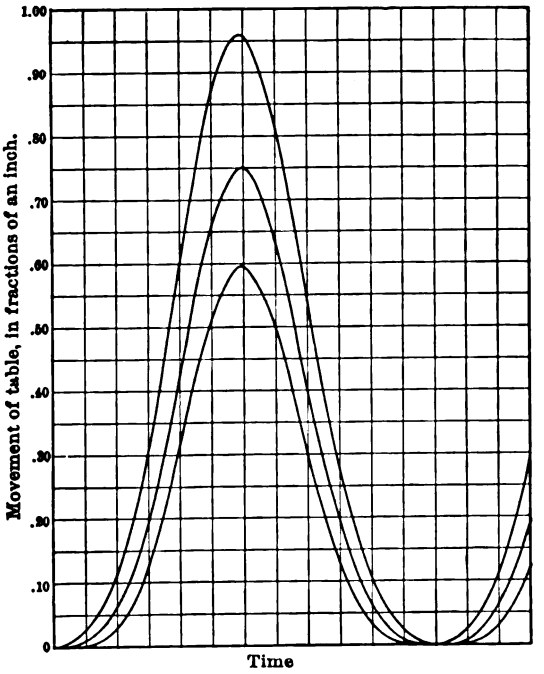

FIG. 201. — ENLARGEMENT OF STROKE DIAGRAMS (CONSTRUCTED MATHEMATICALLY) FOR WILFLEY TABLE.

This movement has a life ranging from 4 to 5 years of continuous service.

The speed at which the tables are run in the mills ranges between a minimum of 150 strokes per minute for very coarse material and a maximum of 290 strokes per minute for very fine material with an average of about 240. The length of throw varies from a minimum of 0.25 inch for very fine material to a maximum of 1.25 inches for very coarse material with an average of about 0.75 inch. The student should observe that the tables are run with the shortest throw and maximum speed on fine pulp and with the maximum throw and slowest speed on coarse pulp.

§ 437. *Tilting Frame.* — A tilting frame or its equivalent is necessary to vary the side slope of the table top to meet the variations in the feed. The deck rests on four vertical iron rockers, which stand on two iron tilting beams. These beams rest on two iron chairs which are bolted to the supporting beam. These tilting beams may be adjusted by a hand wheel to any desired slope, and the deck slopes with them. As the feed varies, the slope of the deck may be adjusted so that the line of separation of the concentrates can be held coincident with the riffle tip ends.

§ 438. *Deck.* — The table deck proper, shown in Figs. 202 and 203, is made of narrow strips of redwood, screwed diagonally to a light, strong frame, and connected with the head movement by means of a draw rod. It is made rigid by three pressed-steel ribs running the full length, supported by two transverse trusses. This construction is staunch, light, and does not warp. The form of the deck of the No. 5 Wilfley table is a trapezoid, the feed side being cut off in a diagonal line. Tables are constructed, however, in various

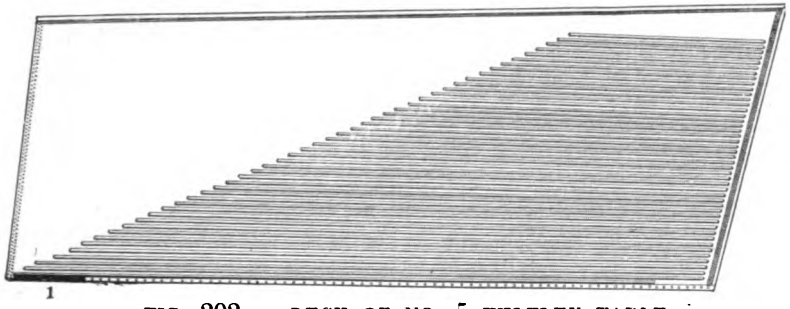

FIG. 202. — DECK OF NO. 5 WILFLEY TABLE.

shapes. The full-sized deck, as shown in Fig. 202, is roughly 16 feet long by 6 feet wide. The ribs and decks must essentially be light to yield readily to the rapid oscillating motion imparted by the movement. The surface must be one that will have a proper holding action on the minerals and at the same time be durable, impervious to water, and easy to replace. For these reasons the deck is covered with linoleum which was adopted as the best substance

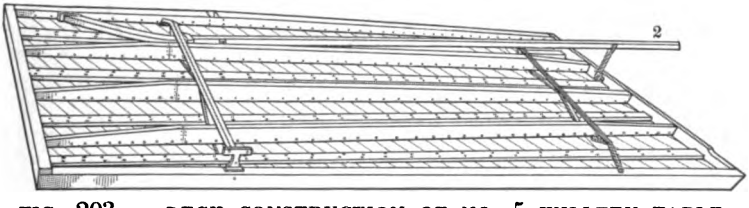

FIG. 203. — DECK CONSTRUCTION OF NO. 5 WILLFEY TABLE.

for the work. Years of continuous service on concentrating tables have proved its value, as it has been found to combine all the requirements mentioned and is peculiarly sensitive to the friction of ore particles upon its surface. Some concentrators are covered with a mixture composed principally of coach varnish and flowered manganese instead of linoleum. This gives a surface upon which water has little or no effect and its wearing qualities are said to be very good.

A series of tapered riffle cleats, ending along a diagonal line, are placed upon the linoleum surface, forming a combination of a riffled portion and a plain surface. The cleats, made of sugar pine, are tacked with small brads to the linoleum surface, the longest cleat being along the lower or tailings side extending the full length of the table. For ordinary ores this cleat is 0.5 inch high by 0.25 inch wide at the mechanism side and tapers uniformly to a feather edge at the concentrates side. From this line each successive cleat is spaced evenly at 1.375-inch centers, and terminates along a diagonal line, the upper and shortest cleat being 0.25 × 0.25 inch at the mechanism side and about 4 feet long. The table is equipped with 46 cleats of the above varying length and taper.

When required by the conditions of the ore, the cleats are varied in dimensions. The usual limits of variation are from the size mentioned for the lower one, ½ inch high by ¼ inch wide, down to 0.25 inch high by 0.25 inch wide, getting proportionately thinner as they clear the mechanism side of the table, where the upper riffle cleat is 0.25 inch high by 0.25 inch wide. The deeper the riffles the greater their power to retain heavy grains, and on this account the lower riffle cleats are often made higher than the upper, and those between are graded from one to the other. The taper of the riffles causes a gradual separation of quartz from the heavy mineral, which favors clean work, but the concentrates must not be forced to climb too steep a grade in consequence of this taper, for if so, they will form a solid bank, and refuse to move forward. The deck has a very slight rise from the mechanism side to the concentrates side (⅜ inch in 16 feet); and for a space of 3 inches at the mechanism side there are no riffles and the surface slopes up on that side to a height of 0.75 inch, which prevents the formation of any bank at that side. The riffles and linoleum have a life of 2 to 4 years in active service.

The space above the riffle cleats forms the roughing plane. The chief function in the deep-bed section of this plane is to give capacity by allowing the wash water to carry to waste a maximum quantity of gangue. The surface between the riffle cleats, and including the upper and perpendicular edge of each riffle cleat, forms the cleaning plane. Its main function is to support the pulp during its progression, while it is being cleaned by wash water. The unriffled surface may be called the clean-ore plane. Its function is to receive and transport the cleaned concentrates to the concentrates box. No cleaning is done after the ore passes beyond the ends of the riffle cleats. Some concentrators have no cleaned-ore plane, that is, those having all the riffles extending to the concentrates side of the deck.

Where tapered riffle cleats are tacked upon the plane surface of the linoleum, the cleaning plane is no longer in the same plane with the cleaned-ore plane, but makes a slight angle with it. Virtually a valley exists between these two planes. This valley results in narrowing the fan of concentrates and deepening the bank of sand. But the nearer one can get to having the treatment of the pulp one grain deep on the riffle cleats, the more perfectly will the grains be treated, each according to its own law. On the small 7-foot table used for experimental purposes this banking sometimes becomes so great as to seriously impede good work, while this difficulty is so small on the full-sized tables as to be nearly insignificant. When a 3-mineral separation is to be made, such as quartz, sphalerite, and galena, a table where the cleaning plane and the cleaned-ore plane are one and the same will be found to give better satisfaction. This is best accomplished by grooving the riffles into the table deck instead of tacking on cleats to form riffles. This is also accomplished on concentrators by making the deck of two planes with a slight angle between them and a flexible joint. In this way the tapered riffle cleats may be tacked upon one plane and the other may be adjusted so as to make a one-plane table, or the smooth surface may be elevated somewhat, making a two-plane table of it and obliging the concentrates to climb up a slight grade.

Fig. 204 shows a cross-section detail of the square riffles such as are used on a Wilfley table deck. The student will observe that the eddy currents formed in washing out the waste material tend to disturb the stratification which has taken place. In order to overcome this tendency the scheme shown in Fig. 205 has been devised and is finding much favor with the millmen. A moment of study will show the similarity of this cross-section with that of a gold-pan, in fact its use enables the table to act in a manner analogous to a panning operation by allowing the values to stratify and then washing

off the gangue without disturbing this stratification. A V-shaped riffle is used on some concentrators with a fair degree of success. Another method of putting on riffle cleats is to have them arranged in groups, each group being separated from the next by a higher riffle cleat. This has the effect of flooding the group of riffles above it with a comparatively quiet sheet of water and allowing additional stratification to take place.

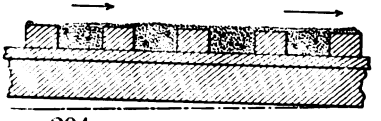

FIG. 204. — SECTION OF SQUARE RIFFLES.

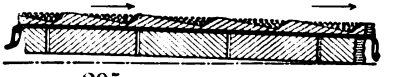

FIG. 205. — SECTION OF IMPROVED RIFFLES.

The Wilfley deck has a rim extending along the feed and mechanism sides, but is open on the concentrates and tailings sides. A lip extends along the tailings side to within about 10 inches of the concentrates side, and along this 10-inch space the middlings discharge into a special launder (2) as shown in Fig. 203, conveying them back to the elevator (3) (see Fig. 199) if desired, or they may be, and usually are, sent to some other machines.

Some concentrators have more than one deck on the same jerking mechanism. In this case each deck is really an independent concentrator and delivers its tailings to the following deck for further separation.

§ 439. *Elevator.* — As already stated the middlings product passes through a 10-inch slot (1) (see Fig. 202) into a launder (2) (see Fig. 203), conveying it to the sand wheel (3) (see Fig. 199), which elevates it and brings it back to the table with the feed. The sand wheel (3) is driven by a reducing gear from the countershaft carrying the driving pulley of the table as shown in Fig. 199. The middlings are returned to the table for two purposes, in part to treat again a portion of the ore which is too rich for tailings and too poor for concentrates; in part also, it is claimed, to equalize the work of the table when the feed is irregular by keeping a bank of sand always present to prevent the concentrates from being washed off. The tailings are discharged back of the middlings on the tailings side.

§ 440. *"Setting up"* and *"Leveling up" Wilfley Tables.* — When possible Wilfley tables should be set on Portland cement foundations, care being taken to set the rockers in a truly horizontal plane. When set level on an immutable foundation, the deck may be readily kept in the plane found by experiment best suited for the ore treated. If not set on immovable foundations, or in buildings, they should be "leveled up" periodically, as the disturbing influence of several tables reciprocating 240 times a minute is very effective in settling the foundation under the table legs.

To "level up" a table, suspend the deck 18 inches or so above the rockers. This can be done conveniently with a small block and tackle. By the use of a spirit level, "level up" the upper ends of the rockers when standing vertically. Adjust the legs by putting shims under them, until the four rockers level up true. When true, drop the deck home on the rockers. Then elevate the concentrates side as much as desired by lifting the two rockers on the concentrates side, using the set screws under the dies on which the rockers stand. A Wilfley table cannot be properly "leveled up" by adjusting one or two rockers. The rockers should be lowered, the tilting beams placed "at home" horizontally, and the legs, supporting the foundation sill, shimmed so that the rockers are level.

§ 441. *Feed.* — The pulp is fed through a box on the perforated launders,

as shown in Fig. 206, which distributes the pulp just above the upper riffle. This launder extends the full length of the table, but only about 4 feet of it is devoted to pulp feeding, the remainder being utilized as a wash water distributor, the latter being separated from the former by a movable gate (1).

FIG. 206. — WILFLEY FEED AND WASH WATER TROUGH.

This pulp and water distributor is supported about one inch from the table deck by brackets attached to the deck itself, consequently it moves with the deck and keeps the contents in a constant state of agitation, preventing the formation of banks of sand in the pulp distributing section. A perforated launder, as described, is preferred to a perforated pipe for this purpose, since it is easily cleaned of leaves and twigs which tend to clog up the discharge holes, 0.375 inch in diameter, located near the bottom at the rear of the launder and spaced about 2.75 inches between centers. The distribution of pulp or wash water to the deck may not only be regulated by the supply to the feed box, but also by sticking wooden plugs into these small holes as desired. The concentrates edge water is brought on by a small perforated launder or by a spray pipe, and serves to prevent the concentrates from drying and floating off. They are discharged from the concentrates side into a receiving box.

§ 442. *Capacity, Power, Water, Costs, etc.* — The speed at which the ore advances, and hence the capacity, depends on the length of the stroke, the speed of the shaft, the elevation or depression of the concentrates end, the character of the ore, size of feed, etc. In the mills the capacity varies between 5 tons per 24 hours on very fine material and 41 tons on the coarsest feed, with an average capacity around 18 tons per 24 hours.

Coarse ore requires more water to carry it along than does fine material, and if an excess of water be used on very fine stuff too much fine mineral will be washed off the table and lost in the tailings. On coarse material the pulp requires as much as 22 gallons of water per minute with the feed and 12 gallons per minute of wash water, while an average pulp should have about 16 gallons of water per minute with the ore and from 6 to 7 gallons of wash water per minute. The finer pulps may have but 10 gallons of water per minute with the ore and require only 2 or 3 gallons of wash water per minute.

The average power required in the mills to drive the shafting, belts, and loose pulley of a Wilfley table is about 0.26 horse-power, and the additional power necessary to drive the table without load is about 0.10 horse-power. The total average power used by a Wilfley table with feed, shafting, pulleys, and belts when working under normal and average conditions is from 0.50 to 0.70 horse-power, with 0.20 and 1.00 horse-power as the two extremes.

At one mill 6 men, working 8-hour shifts each, run 18 Wilfley tables for 24 hours, while at the same plant with 36 tables operating only 9 men are required to operate them under the same conditions. Here, again, we observe that the cost of labor is most variable as well as the most expensive item in running concentrating tables, and this is true of all classes of fine-sand concentrators. Consequently the more tables that can be placed in one man's charge, up to the point where he has all he can do, the cheaper will the labor cost per ton be. Including labor, water (for pulp and washing), power, oil, repairs, etc., it is estimated that the cost of operating a Wilfley table under average sizes of ore and of capacities varies between 7 and 15 cents per ton under the best and worst conditions respectively, with an average at around 10 cents per ton.

The No 5. Wilfley table weighs complete about 2,800 pounds.

§ 443. *Operating Conditions.* — The bed of pulp when stratified on the table top ranges in depth from 1 grain at its margin on the cleaned-ore plane, to a maximum depth of 10 to 20 grains in the riffles at a point from 15 to 30 inches from the tip ends of the riffle cleats.

By reason of having a deep bed where the riffles are deep, two favorable conditions exist. First: A gentle agitation can be maintained between the riffle cleats which opens up the deep bed and gives any grains of value, enmeshed in the upper layers, an opportunity to fall into the lower layers. Second: The upper layers of clean waste can be readily washed away with the tailings without interfering with the progression of the lower layers.

The pulp loses the support of the perpendicular edge of each riffle cleat when it passes beyond the tip end. As soon as this support is lost, the wash water carries the waste and a small part of the concentrates to the next lower riffle, while the balance of the concentrates, completely cleaned, now advance to the plane surface and ride in a bed supported by the diagonally cut-off riffle-cleat tip ends and by the pulp between the tip ends of the riffle cleats.

As the pulp advances along the riffles, which steadily diminish in depth, waste is washed out. This process continues until the bed becomes so shallow near the ends of the riffle cleats that waste cannot longer be washed out without carrying values. This shallow area is the medium of transition from the deep bed of the roughing plane to the completely cleaned ore in the cleaned ore plane.

This area of final transition is popularly called the middlings area. The material composing table middlings is a mixed product containing free grains of heavy mineral largely in excess of free grains of waste, while included grains form a negligible quantity. An impression seems to prevail that all of the so-called middlings return repeatedly to the table for re-treatment. Such is not the case. Concentrates constantly come into the middlings area from the deep-bed area, while the same quantity of concentrates is constantly passing from the middlings area to the cleaned-ore plane. By this process the material composing the middlings area is undergoing a constant change and but a small part is re-treated.

The slope of the Wilfley table ranges between 0° and 3° while on a great majority of the ores handled by this concentrator a slope of 0.75° to 1.25° is maintained. A slight variation of this slope entirely changes the work of the table.

The minimum size of material fed to a Wilfley table depends to some extent upon the character of the ore. As coarse as 4 mesh (about 4 mm.) is said to have been successfully concentrated, and also ore that would all pass through a 200-mesh screen (about 0.06 mm.). The latter was settled in a large classifier and drawn from that to the table. Roughly speaking, most of the ores treated are between 16 and 30 mesh (about 1.0 and 0.5 mm.). Callow says that the proper consistency of the feed for a Wilfley table is about 400 grams of solids per gallon of pulp. A regular feed of properly crushed and classified pulp with a constant water supply are conditions precedent to steady table work. One operator reports that the best work was done on his lead-zinc ore when the concentrates side of the table top was set 0.625 inch higher than the opposite side. The table feed was third-compartment material from Harz jig, re-ground and fed as undersize from a 30-mesh screen. The feed assayed about 7.0% in lead and 20.0% in zinc. When operating normally the zinc product from the table ran 59.0% in zinc with less than 2.0% in lead. When the elevation of the deck fell to 0.375 inch the lead in the zinc product increased to from 5.0 to 8.0%. Upon setting the elevation of the deck at 0.625 inch again the lead in the zinc product would fall below 2.0%.

§ 444. INVESTIGATION OF WILFLEY TABLE WORK. — There exists in print

little exact knowledge of the kind of products that are best adapted for feed to this class of tables, and of the principles upon which they act. The author has made an investigation to throw light upon these two points, using a 1-plane Wilfley table. Some authorities claim that the table does its best work when treating natural products or "mixed feed." By this phrase is meant products which have been crushed to pass through a limiting sieve, but have had no other preparation. Others claim that the ore fed should be closely sized, before it is fed. Still a third group of authorities claims that the ore before being fed to a Wilfley table should be classified by a hydraulic classifier.

§ 445. *Division of Products.* — The usual division of products is easily and naturally made, as shown in Fig. 207; *A* being concentrates; *B*, middlings;

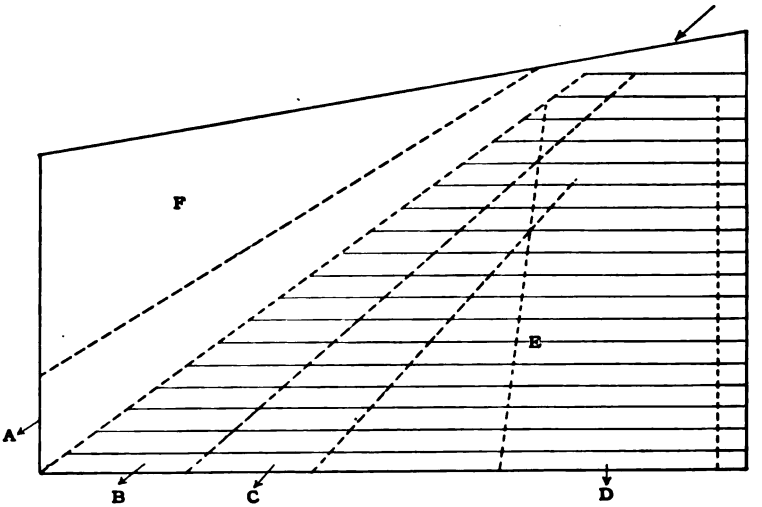

FIG. 207. — USUAL DIVISION OF PRODUCTS ON A WILFLEY TABLE.

C, tailings; and *D*, slimes. Of these, when natural products are fed, the concentrates *A* are nearly clean, heavy mineral, a slight contamination of small grains of quartz being present. The middlings *B* carry some large grains and also some small grains of heavy mineral. The tailings *C* carry some very small grains of heavy mineral, and the slimes *D* carry very minute grains of heavy mineral.

The author believed that the small grains of heavy mineral in middlings *B* and tailings *C* were of less diameter than the smallest in the concentrates *A* and of greater diameter than the majority in the slimes *D*, and that they belonged in middlings and tailings from the law of their existence. The rerunning of such middlings upon the same table is therefore not a wise proceeding, and admissible only as an expedient in small establishments when the quantity of middlings is not sufficient to warrant other provision. So much for the speculation before the investigation was made.

§ 446. *Testing Material.* — The materials for this test were pure white massive quartz for the light mineral and crystalline galena, nearly free from blende and other impurities, from Joplin, Missouri, for the heavy mineral. The quantities of these impurities were so small as to have little effect on the results. Both minerals were broken down to 2-millimeter size, and mixed so as to have approximately 10% of galena and 90% of quartz.

§ 447. *Description of Table used in Test.* — The Wilfley table used for

the tests had a net working surface of 2 × 4 feet. This is the table that has been found very satisfactory for students' work at the Massachusetts Institute of Technology.

As, in this case, the riffle grooves are cut into the wooden table top, the cleaning plane and the cleaned-ore plane are one and the same with no valley between them. By observing this precaution it is believed that this little table is able to do as good work as the full-sized table.

Comparing the little table with the full-sized table as to areas and capacity, assuming that their capacities are proportional to their areas, we have Table 97.

TABLE 97. — AREA AND CAPACITY OF SMALL AND LARGE WILFLEY TABLES.

Little Table.	Large Table.
Area, 8 square feet.	Area, 112 square feet.
Feed, 1 kilogram per minute.	Feed, 22 tons per 24 hours.
" 0.75 " " "	" 16.6 " " " "
" 0.5 " " "	" 11 " " " "

These figures represent the usual range in practice. Seventeen runs in all were made on this material to investigate the effects of the three different kinds of feed.

§ 448. *Natural Feed.* — Runs No. 1 to 5, inclusive, were made upon natural products, the several feed products being 2 millimeters to 0; 1 millimeter to 0; 0.5 millimeter to 0; 0.25 millimeter to 0; and 2 millimeters to 0. Run No. 5, although fed with the same size as No. 1, was fed at a different rate. In making these runs no effort was made to re-run the middlings; first, because the concentrates and tailings would both have been contaminated and would not have shown as well; second, because the middlings themselves would have undergone a change in composition. In consequence of this ruling, the quantities of middlings appear abnormally large. The results of these runs appear in Table 98. (See page 336.)

In these runs the dividing line between concentrates and middlings was chosen so as to make concentrates nearly clean to the eye. The dividing line between middlings and tailings was chosen so as to keep all the large grains of heavy mineral out of the tailings.

The four products — concentrates, middlings, tailings, and slimes — were sized on a series of sieves and the quartz in them determined by dissolving out the galena with hot concentrated hydrochloric acid. The galena was determined by differences. As all of the runs exhibited the same general characteristics it has seemed unnecessary to give the complete results in the case of each run. The results of the sizing-assay test of the four products obtained in run 1 will be found in Table 99. (See page 337.)

§ 449. *Sized Feed.* — Runs No. 6 to 11, inclusive, were all upon sized products; the various feed products being through 2 on 1.4 millimeters, through 1.4 on 1.0 millimeter, through 1.0 on 0.75 millimeter, through 0.75 on 0.50 millimeter, through 0.50 on 0.36 millimeter, and through 0.36 on 0.28 millimeter. Here an effort was made to make both concentrates and tailings as clean as possible and the middlings were re-run until they could not be further reduced without endangering either the concentrates or the tailings. For the results obtained in these runs see Table 98.

§ 450. *Classified Feed.* — Runs No. 12 to 17, inclusive, were made upon sorted or classified products. The classifier used was a 12-spigot free-settling classifier operating with closed spigots, *i.e.*, the spigots discharged sand into

TABLE 98. — SUMMARY OF RESULTS OF RUNS NO. 1 TO 17.

No. of Run.	Size.	Rate of Feeding. Kilograms per Min.	Rate of Feeding. Tons 24 hrs. Large Table.	Composition of the Feed. Quartz.	Composition of the Feed. Galena.	Percentage of the Products. Concentrates.	Middlings.	Tailings.	Slimes.	Composition of Products. Concentrates. Quartz.	Concentrates. Galena.	Middlings. Quartz.	Middlings. Galena.	Tailings. Quartz.	Tailings. Galena.	Slimes. Quartz.	Slimes. Galena.	Percent of Total Galena. Concentrates.	Middlings.	Tailings.	Slimes.	Total Quantity Actually Fed.
	mm.			Per cent.	Per cent.	Per cent.	Per cent.	Per cent.	Per cent.	Per cent.	Per cent.	Per cent.	Per cent.	Per cent.	Per cent.	Per cent.	Per cent.	Per cent.	Per cent.	Per cent.	Per cent.	Kilograms.
1	2 to 0	1	22	90.91	9.09	4.11	21.48	72.87	1.54	9.92	90.08	76.42	23.58	99.49	0.51	81.10	18.90	39.20	53.34	3.82	3.64	11
2	1 to 0	1	22	90.91	9.09	2.97	20.75	72.91	3.37	8.50	91.50	73.37	26.63	99.39	0.61	90.29	9.71	34.58	57.34	4.72	3.36	11
3	0.5 to 0	0.5	11	90.91	9.09	4.67	25.98	62.81	6.54	2.40	97.60	84.10	15.90	99.10	0.90	87.82	12.18	44.86	41.98	5.44	7.72	11
4	0.25 to 0	0.5	11	90.91	9.09	5.34	21.03	60.49	13.14	2.27	97.73	87.16	12.84	98.39	1.61	90.04	9.96	51.48	27.59	8.20	12.73	11
5	2 to 0	0.5	11	90.91	9.09	2.80	45.67	50.30	1.23	4.66	95.34	86.29	13.71	99.71	0.29	85.38	14.62	20.06	67.79	1.62	1.53	9.63
6	2 to 1.4	1	22	92.60	7.40	6.54	1.65	91.81	.....	0.77	99.23	40.33	59.67	99.96	0.04	.....	.....	87.43	12.05	0.52	.....	12.08
7	1.4 to 1	0.75	16.6	89.08	10.92	9.73	1.90	88.37	.....	0.77	99.23	76.90	23.10	100.00	0.00	.....	.....	96.43	3.57	0.00	.....	6.74
8	1 to 0.75	0.5	11	87.32	12.68	12.06	1.69	86.25	.....	0.99	99.01	83.00	17.00	99.91	0.09	.....	.....	97.62	1.80	0.58	.....	4.93
9	0.75 to 0.5	0.5	11	87.15	12.85	13.15	1.60	85.25	.....	2.50	97.50	77.40	22.60	99.65	0.35	.....	.....	96.58	2.29	1.13	.....	2.845
10	0.5 to 0.36	0.5	11	85.92	14.08	12.18	5.31	82.51	.....	0.69	99.31	80.03	19.97	99.76	0.24	.....	.....	90.57	7.95	1.48	.....	1.72
11	0.36 to 0.28	0.5	11	85.70	14.30	15.10	3.17	81.73	.....	0.74	97.86	84.67	15.35	99.56	0.44	.....	.....	94.60	3.10	2.30	.....	1.59
	Classifier.																					
12	1st spigot	0.5	11	49.82	50.18	49.65	5.53	44.82	.....	0.74	99.26	86.15	13.85	99.71	0.29	.....	.....	98.21	1.53	0.26	.....	13.60
13	2d "	0.5	11	95.21	4.79	3.95	1.31	94.74	.....	1.38	98.62	66.05	33.95	99.64	0.36	.....	.....	81.35	10.72	7.93	.....	14.197
14	3 and 4 "	0.75	16.6	96.23	3.77	3.40	0.66	95.94	.....	1.15	98.85	65.57	34.43	99.80	0.20	.....	.....	88.95	5.98	5.07	.....	14.629
15	5 and 6 "	0.5	11	94.39	5.61	4.94	0.83	94.23	.....	1.65	98.35	71.10	28.90	99.45	0.55	.....	.....	86.66	4.29	9.05	.....	3.745
16	7, 8, 9, "	0.5	11	93.74	6.26	5.72	1.04	94.23	.....	1.16	98.84	83.75	16.25	99.54	0.46	.....	.....	90.58	2.90	6.52	.....	2.28
17	10, 11, 12"	0.5	11	93.73	6.27	4.98	4.26	90.76	.....	0.38	99.62	83.72	16.28	99.34	0.66	.....	.....	79.38	10.69	9.93	.....	1.9

TABLE 99. — COMPLETE SIZING-ASSAY TEST OF WILFLEY RUN ON NATURAL FEED. RUN 1.

Size in Millimeters.		Concentrates.			Middlings.			Tailings.			Slimes.		
		Weight Tons.	Assay Percent.		Weight Tons.	Assay Percent.		Weight Tons.	Assay Percent.		Weight Tons.	Assay Percent.	
Through.	On.		Galena.	Quartz.		Galena.	Quartz.		Galena.	Quartz.		Galena.	Quartz.
.....	2.06	0.017	100.00	0.00	0.132	73.47	26.53	3.777	0.40	99.60	.....	.....	.....
2.06	1.63	0.059	99.77	0.23	0.795	75.39	24.61	14.713	0.40	99.60	.....	.....	.....
1.63	1.44	0.066	99.80	0.20	0.783	69.47	30.53	11.145	0 50	99.50	.....	.....	.....
1.44	1.27	0.112	99.88	0.12	1.202	62.80	37.20	8.085	0.20	99.80	.....	.....	.....
1.27	1.10	0.084	99.76	0.24	0.954	54.75	45.25	6.174	0.01	99.99	.....	.....	.....
1.10	0.97	0.120	99.43	0.57	1.056	43.80	56.20	7.322	0.02	99.98	.....	.....	.....
0.97	0.84	0.174	98 42	1.58	1.552	31.40	68.60	5.191	0.00	100.00	.....	.....	.....
0.84	0.68	0.206	96.54	3.46	2.021	20.10	79.90	3.350	0.00	100.00	.....	.....	.....
0.68	0.57	0.245	94.47	5.53	1.865	16.70	83.30	2.078	0.00	100.00	.....	.....	.....
0.57	0.45	0.506	91.05	8.95	3.112	11.30	88.70	2.501	0.00	100.00	.....	.....	.....
0 45	0.36	0.402	83.81	16.19	2.326	8.11	91.89	1.581	0.08	99.92	0.156	0.00	100.00
0.36	0.28	0.445	81.24	18.76	2.526	6.44	93.56	1.056	0.12	99.88	0.047	10.20	89.80
0.28	0.24	0.306	81.01	18.99	0.848	4.92	95.08	0.523	0.69	99.31	0.030	10.00	90.00
0.24	0.20	0.375	84.39	15.61	1.230	3.68	96.32	0.633	1.24	98.76	0.053	10.81	89.19
0.20	0.15	0.307	89.48	10.52	0.648	4.44	95.56	0.739	1.45	98.55	0.063	12.58	87.42
0.15	0.12	0.209	95.08	4.92	0.207	6.65	93.35	1.139	1.82	98.18	0.052	19.00	81.00
0.12	0.10	0.110	95.08	4.92	0.075	7.26	92.74	0.624	2.88	97.12	0.068	24.28	75.72
0.10	0.08	0.189	97.74	2.26	0.061	32.23	67.77	0.948	3.43	96.57	0.134	27.04	72.96
0.08	0.00	0.182	99.45	0.55	0.093	90.46	9.54	1.277	7.50	99.49	0.935	28.31	71.69
Total Tons...		4.114	90.08	9.92	21.486	23.58	76.42	72.856	0.51	82.50	1.544	18.90	81.10

2-gallon bottles as fast as it came, but discharged no water. The sorting columns were of 0.5-inch pipe squared at the top and 3 inches long. Expressed in millimeters per second the rising currents in the successive sorting columns were 105, 85, 69, 55, 45, 36, 29, 23, 19, 15, 12, and 10 respectively. Instead of running each spigot separately, six runs were made with products as follows: 1st spigot; 2d spigot; 3d and 4th together; 5th and 6th together; 7th, 8th, and 9th together; and 10th, 11th, and 12th together. The general details of these six runs will be found in Table 98, and in Table 100 there will be found a complete sizing-assay test of run 13.

TABLE 100. — COMPLETE SIZING-ASSAY TEST OF WILFLEY RUN ON CLASSIFIED FEED. RUN 13.

Size in Millimeters.		Sizing Test of Feed.			Concentrates.			Middlings.			Tailings.		
		Percent.			Weight Tons.	Assay Percent.		Weight Tons.	Assay Percent.		Weight Tons.	Assay Percent.	
Through.	On.	Quartz.	Galena.	Middlings.		Galena.	Quartz.		Galena.	Quartz.		Galena.	Quartz.
2.83	2.49	.....	.....	.....	.....	.....	.....	.....	.....	.....	0.043	0.00	100.00
2.49	2.06	1.517	.....	.....	.....	.....	.....	0.001	0.00	100.00	1.336	0.00	100.00
2.06	1.63	20.299	.....	0.006	0.001	100.00	0.00	0.015	8.84	91.16	18.429	0.08	99.92
1.63	1.44	20.805	0.004	0.009	0.001	100.00	0.00	0.026	10.87	89.13	21.674	0.07	99.93
1.44	1.27	19.856	0.003	0.013	0.002	93.10	6.90	0.037	21.33	78.67	20.207	0.48	99.52
1.27	1.10	15.746	0.004	0.016	0.002	91.45	8.55	0.014	28.29	71.71	11.066	0.09	99.91
1.10	0.97	5.161	0.006	0.011	0.002	89.69	10.31	0.018	39.39	60.61	7.877	0.18	99.82
0.97	0.84	5.925	0.037	0.023	0.011	95.63	4.37	0.078	38.92	61.08	7.835	0.18	99.82
0.84	0.68	2.734	0.063	0.017	0.036	96.15	3.85	0.120	29.42	70.58	2.676	0.54	99.46
0.68	0.57	1.527	0.147	0.013	0.124	97.49	2.51	0.194	25.14	74.86	2.098	1.16	98.84
0.57	0.45	1.558	0.865	.....	0.730	98.01	1.99	0.494	31.00	69.00	1.122	6.04	93.96
0.45	0.36	0.217	0.678	.....	1.208	98.80	1.20	0.188	47.93	52.07	0.121	16.00	84.00
0.36	0.28	0.107	1.215	.....	0.687	98.24	1.76	0.089	49.53	50.47	0.097	33.05	66.95
0.28	0.24	0.028	0.517	.....	0.384	98.96	1.04	0.014	46.20	53.80	0.038	27.60	72.40
0.24	0 20	0.015	0.414	.....	0.393	99.35	0.65	0.011	52.99	47.01	0.024	19.00	81.00
0.20	0.15	0.009	0.233	.....	0.223	99.58	0.42	0.003	71.90	28.10	0.019	13.32	86.68
0.15	0.12	0.005	0.107	.....	0 084	99.81	0.19	0.002	88.22	11.78	0.014	15.30	84.70
0.12	0.10	0.003	0.025	.....	0.021	99.82	0.18	0.001	92.04	7.96	0.009	40.40	59.60
0.10	0.08	0.005	0.029	.....	0.029	99.83	0.17	0.001	91.95	8.05	0.029	55.55	44.45
0.08	0.00	0.009	0.023	.....	0.012	99.64	0.36	0.001	96.40	3.60	0.029	87.00	13.00
Total Tons...		95.526	4.370	0.108	3.950	98.62	1.38	1.307	33.95	66.05	94.743	0.36	99.64
Settling ratio..			4.11										

§ 451. *Discussion of Results.* — Comparing the 17 runs as to quantity of the products without looking at the quality (see Table 98), it will be noticed at once that the concentrates and tailings in runs No. 6 to 11 and No. 12 to 17 are very much larger in quantity than these products in runs No. 1 to 5, while the middlings are very much smaller.

In Table 99 will be found the complete sizing-assay test of run 1. If we examine the columns marked concentrates we find the coarser and finer sizes to be almost clean galena, while at a point somewhat below the middle the quartz rises to a maximum of 18.99%. In the case of the middlings, we find again the galena giving a very high percentage among the largest and smallest grains and a maximum of quartz in the middle sizes. This is analogous to the composition of the concentrates. In the tailings we note that the galena appears only to a very slight degree until we get down to the smaller sizes, and that then we have figures that rise to an alarming size. Run No. 1 has 17.5% of galena in the finest size. The slimes also have a serious percentage of lead in the finest size.

Commenting upon runs No. 6 to 11, Table 98, as compared with runs No. 1 to 5, we note immediately that the concentrates all the way through are almost pure galena with scarcely any quartz, and the tailings are almost pure quartz with scarcely any galena. The middlings, as remarked before, are so small in quantity that they affect the runs but little, and when we consider that they can go directly back onto the table in the continuous run, they do not affect the result at all. This set of runs, No. 6 to 11, therefore appears to distance runs No. 1 to 5 in the competition. There is really no comparison, since runs No. 1 to 5 are not in the same class with them.

If, now, we pass to Table 100 and compare the concentrates of run 13 with those of run 1 as given in Table 99, we see that in the case of run 13 the percentage of quartz looks high in the coarser sizes. This would seem a serious disadvantage were it not for the fact that these products which have the high percentages of quartz are so small in quantity that the quartz cuts scarcely any figure in the final percentage of quartz in the concentrates. In the case of the tailings we have one feature here which does not and cannot appear in sized runs, No. 6 to 11, viz., the tailings get richer in galena down to the finer sizes; but when we look at the tonnage we find that there is scarcely any weight of material down in those sizes, and therefore this loss is not serious and does not bring up the percentage of galena in the final tailings to a serious extent.

For a more complete interpretation of what happens in the three groups of runs, Fig. 208 has been designed. This is an ideal sketch of what happens at the discharging corner of a Wilfley table. Running from coarse on the lower edge to fine on the upper, *A*, *B*, *C*, *D*, *E*, *F*, *G*, and *H* represent the different sizes of galena. It appears that they arrange themselves approximately according to this order on the Wilfley table. In like manner, the quartz grains arrange themselves approximately in order of size, beginning at the lower edge with the largest grade and running smaller and smaller upwards, as indicated by the letters *I*, *J*, *K*, *L*, *M*, *N*, *O*, and *P*. The slimes at once take off the galena *H* and the quartz *P*. These finest of all grains have not sufficient weight to hold them up to the upper edge, where mathematical logic would place them. They therefore go into the slimes. The next grade *G* (galena) and *O* (quartz), are not fine enough to go into the slimes nor coarse enough to stand up against the water current in the position shown in the sketch. These grains are found, therefore, sprinkled through the concentrates, middlings, and tailings. See the heaping up of galena in the small sizes in Tables 99 and 100.

Having laid out our argument in this way, it now remains for us to compare by means of this diagram runs No. 1 to 5, 6 to 11, and 12 to 17, and to

see why it is that runs No. 6 to 11 on sized feed and No. 12 to 17 on classified feed are so much better than runs No. 1 to 5 on natural feed. Runs No. 1 to 5 take the products just as they are shown in Fig. 208 and give galena, *C*, *D*, *E*, *F*, in the concentrates contaminated by quartz *N*. See the heaping up of the quartz a little below the middle size in Table 99, and middlings that give quartz *K*, *L*, and *M*, contaminated by galena, *A*, *B*, *C*, and *G*. The tailings have in them the quartz, *I*, *J*, and *O*, contaminated by galena *G*. Runs No. 6

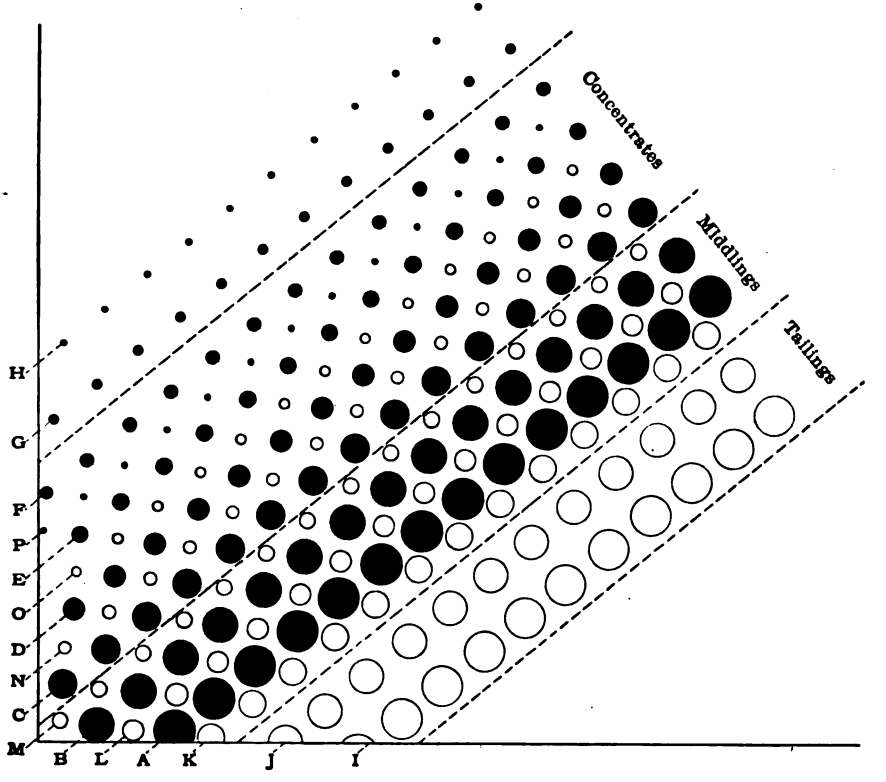

FIG. 208. — IDEAL SKETCH OF THE ARRANGEMENT OF GRAINS BY A WILFLEY TABLE.

to 11, on the other hand, have put together on the coarse table, quartz *I* and galena *A*, which have nothing whatever to do with one another, and therefore make almost 100% of galena in the concentrates, and almost 100% of quartz in the tailings. The little accidental middlings product, simply being the dividing line between the two products, goes back on the table and disappears. On the second table we treat quartz *J* and galena *B* with the same result. On the third table we treat quartz *K* and galena *C* with the same result; on the fourth table quartz *L* and galena *D;* on the fifth table quartz *M* and galena *E;* on the sixth table quartz *N* and galena *F*. There seems no reason logically why these should not turn out 100% of galena in the concentrates and 100% of quartz in the tailings. The probable reason why we did not obtain those figures was that the accidental flat scales and the fine abrasions of galena went where they should not.

Going to the third set of runs, No. 12 to 17, we need to bring in an ideal

picture of the products of a classifier by means of Fig 209. Suppose, for example, that we drop into a tall tube of water grains of quartz ranging from our maximum size down to zero, and grains of galena in the same way, and that these grains are of approximately the same shape, then the rate of settling of these grains may be stated in the following terms: the larger grains of a single mineral will settle faster than the smaller grains; and when we compare the two gravities of quartz and galena, the higher gravity will settle faster than the lower gravity for the same size. So definite is this law that if we look for equal-settling particles, we shall find that the grain of quartz which is equal settling with the grain of galena is about three or four times the diameter of the grain of galena. We may, therefore, construct the ideal diagram (Fig. 209), and we can draw a set of horizontal lines across it, putting the equal-settling grains together, ranging from the heavier grains of the first spigot in the lower part of the diagram up to the lighter grains of the finer spigot at the upper part of the diagram. We see then that spigot 1 contains a large amount of galena, ranging from the coarsest size down to one-quarter the diameter of the coarsest quartz, and that the quartz is almost all in the coarse sizes. This is exactly what we found in our run No. 12.

FIG. 209. — IDEAL SKETCH OF CLASSIFIER PRODUCT.

Spigot 2 has small galena and large quartz, but both are a little smaller than those in spigot 1. Spigot 3, again, has small galena and large quartz, but a little smaller than spigot 2, and so on up the scale with spigot 4, spigot 5, and spigot 6.

Looking at our diagram (Fig. 208) to see what will happen when these several spigots are put upon the table, we shall find that run No. 12 receives galena *A*, *B*, *C*, *D*, *E*, *F*, F_1, and quartz *I*. Logically these have nothing to do with one another, and therefore should make for perfect separation. Spigot 2, fed in run No. 13, would have quartz *J* and galena F_2. Spigot 3 would have quartz *K* and galena F_3, and so on. Spigots 4, 5, and 6, could work their way up, having quartz always larger, and therefore belonging at a lower place on the table, and galena of smaller diameter belonging at a higher place on the table, making for clean separation of concentrates and tailings, with a middlings product that can go directly back on the table and disappear.

In the light of Fig. 208, comparing runs 12 to 17 with runs 6 to 11, we see that the natural lines for quartz and galena are farther apart for the classified products than for the sized products. For example, in run 12 the galena lines *A* to *F* average farther from the quartz *I* than does the galena *A* of run 6. Again, in run 13 the galena F_2 is farther from quartz *J* than is the galena *B* from quartz *J* in run 7. In like manner we may compare classified runs 14, 15, 16, and 17 with sized runs 8, 9, 10, and 11.

This demonstrates that with perfect classification the work will be better done on the Wilfley table than with sizing, and it also shows that with much middle-weight mineral or included grains a good classifier will probably be more efficient than screens. It must be remembered that in these tests the sized products were prepared under ideal conditions, being dry sized with the greatest

care. In the mill, screening wet, the classifier would compare much more favorably with the screens on the sizes which it is best adapted to treat.

§ 452. *Conclusions.* — 1. The natural product as feed for a Wilfley table is completely outclassed and surpassed by sized-product feed and by classifier-product feed.

2. The sized product feed, as shown in Table 98, appears to have succeeded better on the whole than the classified feed. But if we take into account the remarkable result of No. 12 with its large quantity and favorable percentage, the less favorable figure of runs 13 to 17 would seem to be counterbalanced.

3. We may conclude from these tests that classified feed is as advantageous as sized feed for the Wilfley table, provided the classifier is a thoroughly good one; and in case of much middle-weight mineral it is probably more advantageous.

A further series of 16 runs analogous to those just described has been carried out by the author, using quartz and cupriferous pyrite. These tests have amply confirmed the results of the first series of tests and demonstrate fully that when dealing with middle-weight minerals the classifier shows up much better than it does when dealing with the heavier minerals such as galena.

§ 453. *Practical Application of Results.* — The results shown by these tests on the Wilfley table are borne out in mill practice. In brief, mills treating a natural product or mixed feed on a Wilfley table will always get two things: (1) middlings which contain large grains of concentrates and some smaller grains of quartz; (2) tailings which have concentrates in the finest sizes in a quantity too great to be neglected. The first may be fairly well treated in a small one-pocket classifier yielding concentrates in the spigot and a product in the overflow which may be sent back to the table again. The second may be sized on a fine screen, say 80-mesh, which will give an oversize without free mineral and an undersize which can go to a slime vanner giving very clean tailings.

Feeding the table with either sized or classified products is believed by the writer to be far more simple than the above method. The sized products have, as the tests show, produced fine results until the finest sizes are reached, when the products, from a table fed with such material, come just as indicated above for a natural or mixed feed and may be corrected by the methods already outlined. The classifier too gives products which are a great improvement over the natural feed until the two finest sizes are reached, which are no better than similar sizes from the ordinary mixed feed and they also may be corrected in the same way.

§ 454. Sized Versus Classified Feeds For the Wilfley Table. — The comparison between screens and classifiers in the preparation of feeds for table work has not yet been worked out in the mills sufficiently to give positive figures. The writer believes, however, that the cost of the wear and tear on screens, the facts that screening is imperfectly done in the finer sizes, and in the finest sizes can hardly be done at all; and also that since the classifier places the grains of mineral and gangue farther apart on the table than does sizing, as already explained, the balance stands in favor of the classifier. In making this statement he is fully aware that his own interest in classifiers may bias his opinion and he tries to hold himself open to conviction.

§ 455. Proper Treatment of Classified Products. — The inverted pulsator classifier, used in connection with Harz jigs and Wilfley tables, when fed with 2.5-millimeter material, will deliver 7 or 6 products according to whether or not the small end spigot is used. In case it is used, spigots 7, 6, and 5 will make products which, when treated on Harz jigs, deliver tailings having

no free mineral. Spigots 4 and 3 will make products which, when treated on Wilfley tables, deliver tailings having no free mineral. The finest products, or those from spigots 2 and 1, when treated on Wilfley tables, make slimes which must be cleaned by further treatment on a slime vanner, and tailings which should be sent to a fine sizing screen, say 80-mesh, giving oversize which goes to waste and undersize which must be handled on a sand vanner.

§ 456. FURTHER INVESTIGATIONS. — The author has had further tests conducted to investigate the exact working phenomena of the Wilfley table in order to determine what product is its proper feed, to locate its losses, and to establish an agitation ratio between galena and quartz. By the latter is meant the ratio between the maximum diameters of galena and quartz grains in the table products.

§ 457. *Material Treated.* — The ores used in the tests were prepared by graded crushing into two sizes, 1.4 millimeters to 0 and 0.125 millimeter to 0. These natural products were composed of 20% galena and 80% quartz. The galena was a finished jig concentrates from Joplin, Missouri, crystalline, and practically free from sphalerite and other impurities. It contained a small quantity of calcite as included grains with the galena; but the amount was so small that it did not affect the results of the tests. The quartz was massive with pure white, vitreous luster and came from Hingham, Massachusetts. Its impurities were exceedingly low and were not considered.

§ 458. *Sizing Tests of Ore.* — A sizing test of each lot treated shows clearly the nature of the material, although it was prepared very carefully by graded crushing to keep the quantity of fines as low as possible. For this purpose only the quartz was available, with the 1.4-millimeter to 0 size, as all the galena had been used before sizing tests were considered. In the case of the 0.125-millimeter to 0 size, however, both the galena and quartz were available for sizing tests. Table 101 gives the results of sizing tests in both cases:

TABLE 101. — SIZING TESTS ON PRODUCTS COMPOSING WILFLEY TABLE FEED.

Double Rittinger Sieve Scale. Millimeter.	1.4 mm. to 0 Size % Quartz	0.125 mm to 0 Size.	
		% Quartz.	% Galena.
On 1.27	7.80	.....	.....
" 1.10	6.01	.....	.....
" 0.97	8.66	.....	.....
" 0.84	13 13	.....	.....
" 0.68	6.96	.....	.....
" 0.57	8.69	.....	.....
" 0 45	10.38	.....	.....
" 0.36	6.31	.....	.....
" 0.28	8.84	.....	.....
" 0.24	4 07	.....	.....
" 0.20	3.72	.....	.....
" 0.15	3 00	0.02	0.03
" 0.12	3.19	4.49	3.73
" 0.10	1 53	40.34	27.31
" 0.08	5 89	47.02	53.18
Through 0.08	1 82	8.13	15.75
Total	100 00	100.00	100.00

§ 459. *Description of Apparatus.* — The Wilfley table used (see Fig. 210) is the same as described in § 447, being 52 and 46 inches in length by 27 inches wide. To the concentrates side of the table a corrugated galvanized-iron apron, *A*, was attached, the space between the apron and the table being filled with a mixture of glycerine and litharge which was allowed to harden. The lower edge of this apron was cut in such a way that a slightly bent tip was left in each of the troughs to guide the samples into their proper receptacles.

Small interlocking tin receptacles 1, 2, 3, etc., each 11 inches long by 1 inch wide by 1.5 inches deep, were placed on supports in sets. One set was placed parallel to the line of motion and at the concentrates side of the table, beginning at the middlings corner. The other set was placed at right angles to the first and along the tailings side.

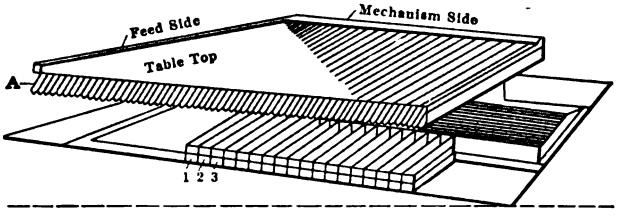

FIG. 210. — WILFLEY TABLE DECK SHOWING METHOD OF PLACING APRON AND SAMPLING TINS.

§ 460. *Description of Tests.* — The table was adjusted to the best operating conditions for each test by small trial runs. These conditions and the details of the runs are well explained in Table 102.

TABLE 102. — DETAILS AND OPERATING CONDITIONS OF WILFLEY TABLE TESTS.

	Run No. 1.	Run No. 2.
Size of ore fed	1.4 mm. to 0	0.125 mm. to 0
Weight of ore fed. Kilograms	13.50	7.00
Composition of ore fed. Percent	20 PbS; 80 SiO_2.	20 PbS; 80 SiO_2.
Rate of feeding. Kilograms per minute	1.00	0.50
Feed water. Kilograms per minute	3.00	7.95
Wash water. " " "	11.80	7.55
Total water. " " "	14.80	15.50
Feed water dial	35°	40°
Slope of the table	1°40′	1°10′
Number of strokes per minute	230	237
Length of stroke. Inches	0.8125	0.78125
Concentrates, middlings, and tailings. Kilograms	11.35	2.50
Slimes from product tank I. Kilograms	0.55	0.80
" " " " II. and slime tank. Kilograms		1.80
Weight of samples. Kilograms	1.63	0.70
Total weight recovered. Kilograms	13.53	5.80
Loss. Kilograms	00.03 (gain)	1.20

The heavy loss in run No. 2 was possibly caused by the fine slimes leaking out through the cracks, etc., of the slime tank. The gain of 30 grams in run No. 1 probably occurred in adding up weights, as the samples were only weighed to the nearest gram. Samples were taken during a period of 2 minutes and 25 seconds during run No. 1 and the corresponding time on run No. 2 was 2 minutes. In this latter case a dark muddy band, 26 inches wide, extended along the tailings side between a point 7 inches from the concentrates side and 13 inches from the mechanism side. All slimes were settled with alum and soda.

All of the samples were dried, weighed, sized, and analyzed. The sizing was done with a set of double Rittinger sieves. In the coarser sizes the amount of galena and quartz was determined by hand-picking, while in the smaller sizes the galena was dissolved out in hot concentrated hydrochloric acid, filtered off, and thoroughly washed; the galena being found by difference.

In order to show the actual arrangement of the grains of galena and quartz on the table, the sized products were spread out in proportionate parts on ruled paper and photographed.

§ 461. *Discussion.* — Fig. 211 shows the distribution of galena and quartz on the different parts of the table for run No. 1 and their relative amounts.

Samples No. 1 to 31 inclusive were actual weights taken in 2 minutes and 25 seconds, while sample No. 32 was a portion representing the 0.55 kilogram of slimes. There were 20 samples taken on the concentrates side of the table beginning, 1, 2, 3, etc., as shown in Fig. 210 and following round the table on the tailings side.

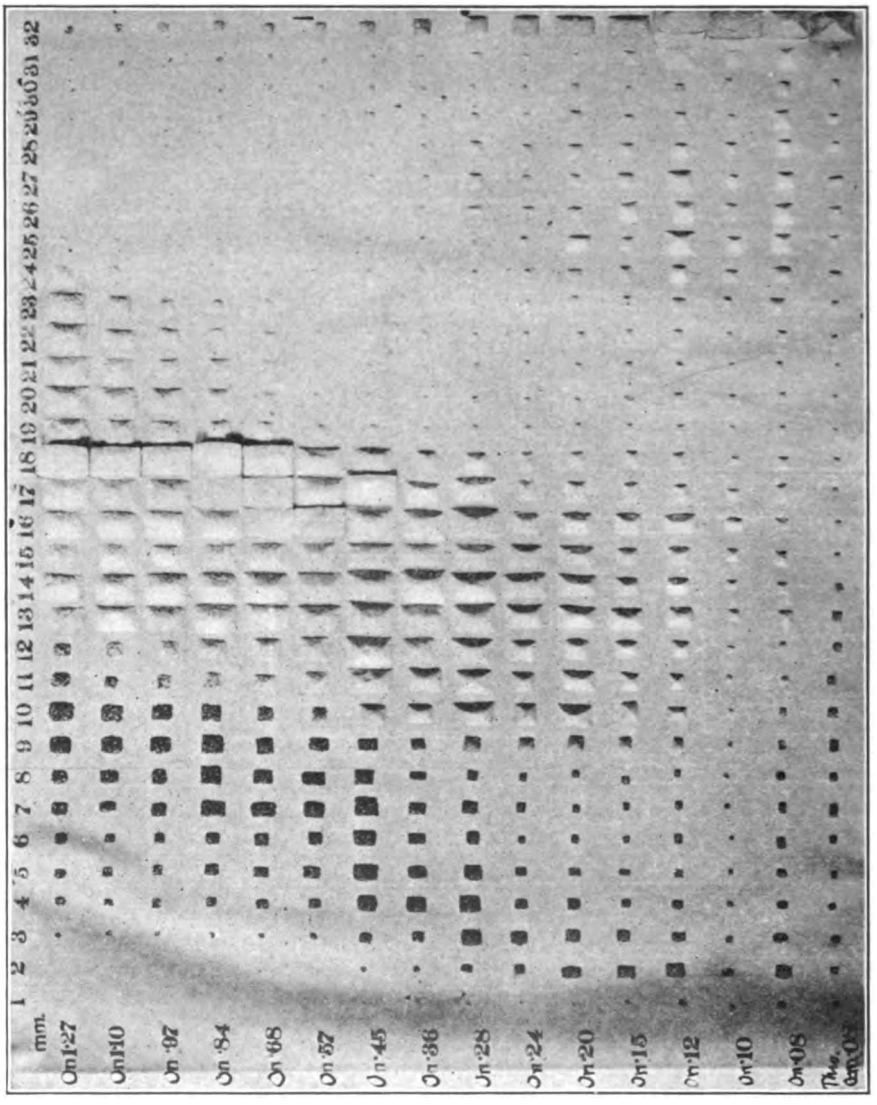

FIG. 211. — DISTRIBUTION OF GALENA AND QUARTZ ON WILFLEY TABLE DURING RUN NO. 1.

The fine grains of galena were at the very top of the concentrates-band. They were, however, somewhat flat in shape when examined with a glass.

The impurity, sphalerite, appeared in sample No. 9 between sizes 0.28 mm. and 0.12 mm., and again in sample No. 10 between sizes 0.45 mm. and 0.24 mm. The quartz spread through the whole of the concentrates but did not appear regularly until in sample No. 7.

The included grains and the impure galena generally occurred in the tailings and disappeared below the 0.36-mm. size.

In sample No. 32 the large grains of included mineral, impure galena, and quartz, were brought down by greasy flotation.

The division lines between different products were made arbitrarily. What was above and on sample No. 10 was called concentrates, samples No. 11, 12, and 13 were named middlings, samples No. 14 to 31 inclusive were designated as tailings, and sample No. 32 was slimes.

As to what caused the big heaps on the lower right-hand corner of the cut and the small heaps at their left remains to be studied.

Fig. 212 shows the results of run No. 2. Samples No. 1 to 30 inclusive were actual weights taken. Sample No. 31 was a portion representing the 0.8 kilogram of slimes, and sample No. 32 was a portion representing the 1.8 kilograms of slimes.

Samples No. 1 to 11 inclusive were called concentrates and the quartz did not come regularly in these samples until in No. 9. The middlings are made up of samples No. 12, 13, 14, 15, and 16. Samples No. 17 to 29 inclusive constitute the tailings; while No. 30, 31, and 32 are slimes.

§ 462. *Agitation Ratio.* — The agitation ratio is the ratio of the galena grain of "average diameter" to the quartz grain of "average diameter," or vice versa. The "average diameter" is calculated as follows:

Let $D'g$ = average size of a limited range of galena grains, *i.e.*, the mean of the sizes of the sieves through which it has been and on which it rests.

Let $D'q$ = average size of a limited range of quartz grains.

Let $W'g$ = weight of galena on a sieve.

Let $W'q$ = weight of quartz on a sieve.

Let $W\,g$ = total weight of galena in sample.

Let $W\,q$ = total weight of quartz in sample.

Also let:

$\Sigma D'g\ W'g$ = sum of the products of $D'g$ and $W'g$ in a sample.

$\Sigma D'q\ W'q$ = sum of the products of $D'q$ and $W'q$ in a sample.

Dg = "average diameter" of galena grains in a sample.

Dq = "average diameter" of quartz grains in a sample.

Then:

$$Dg = \frac{\Sigma D'g\ W'g}{W\,g} \text{ and } Dq = \frac{\Sigma D'q\ W'q}{Wq}.$$ Hence the "agitation ratio,"

Dg: Dq = galena: quartz.

The agitation ratio has been figured for samples No. 7, 10, 13, and 18 of run No. 1 and is as follows:

Sample Number.	Agitation Ratio.
7	1.95 : 1.00 = galena : quartz.
10	3.09 : 1.00 = " : "
13	1.03 : 1.00 = " : "
18	1.00 : 1.95 = " : "

Sample No. 7 is chosen because it is the first one of the concentrates into which the quartz comes regularly. No. 10 is located at the end of the concentrates-band. Sample No. 14 is representative of the middlings and No. 18 comes from the best part of the tailings.

It is evident from the above ratio that in the concentrates the "average" galena grain is much larger than the "average" quartz, while in the tailings the reverse is true.

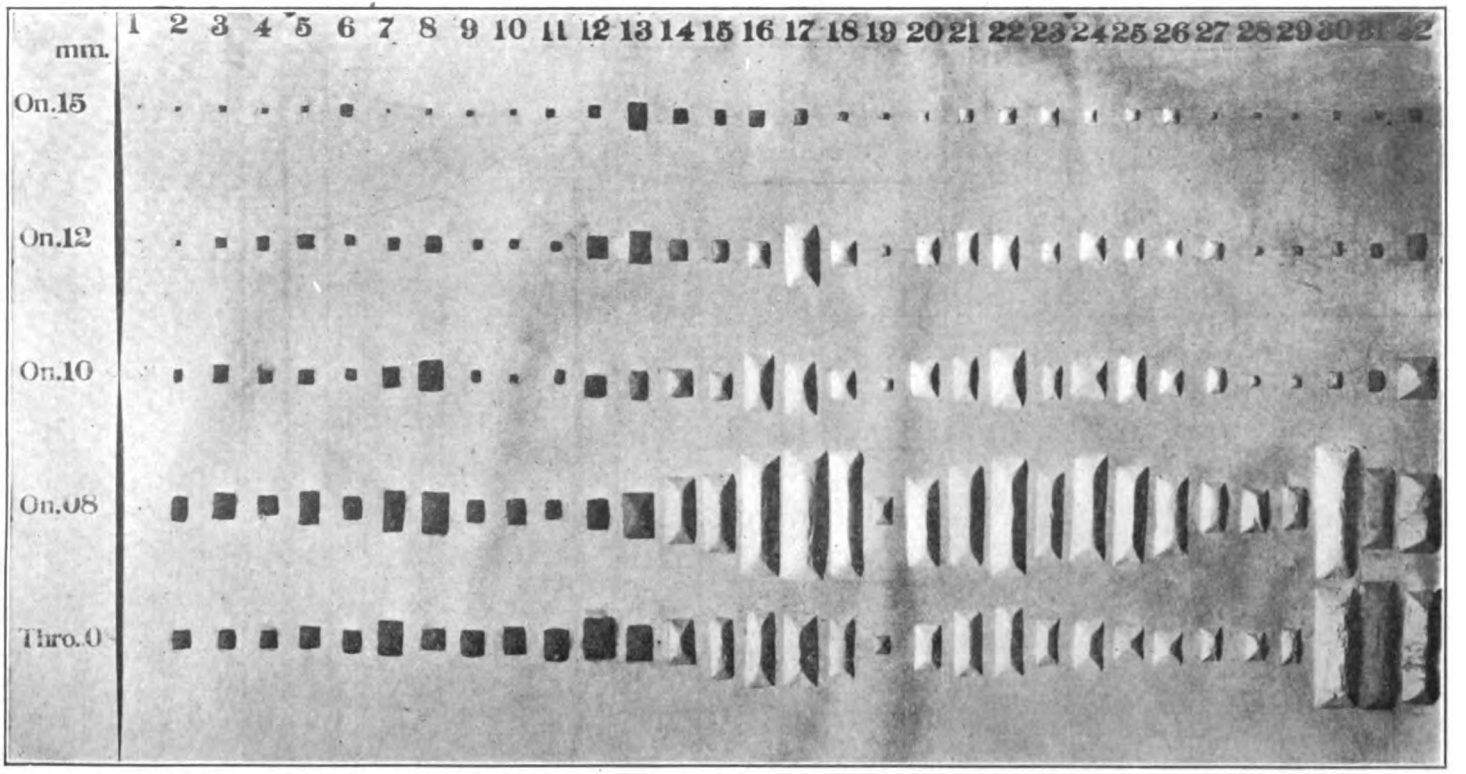

FIG. 212. — DISTRIBUTION OF GALENA AND QUARTZ ON WILFLEY TABLE DURING RUN NO. 2.

The agitation ratio in samples No. 9, 12, 16, 18, and 22 of run No. 2 is as follows:

Sample Number.	Agitation Ratio.
9	1.00 : 1.38 = galena : quartz.
12	1.00 : 1.67 = " : "
16	1.00 : 1.68 = " : "
18	1.00 : 1.41 = " : "
22	1.00 : 1.00 = " : "
26	1.00 : 1.05 = " : "

Sample No. 9 is where the quartz first comes into the concentrates regularly and No. 12 is at the end of the concentrates-band. The middlings are represented by sample No. 16. Sample No. 18 is at the beginning and No. 22 the best part of the tailings. Sample No. 26 is near the slimy part of the tailings.

The agitation ratios derived from run No. 2 show a tendency to be the reverse of those from run No. 1. In run No. 2 the "average" galena grain in the concentrates is smaller than the "average" quartz grain, and in the tailings they are of about the same size.

§ 463. *Location of Losses.* — The loss of galena in the tailings and slimes of run No. 1 is given below:

Total loss of galena in 0.55 kilogram of slimes	=	165.80 grams.
" " " " " tailings	=	51.90 "
" " " " " run No. 1	=	217.70 "
Total galena in sample run	=	2700.00 "

The amount of galena lost in the slimes was over three times as much as in the tailings.

The loss of galena in the tailings and slimes of run No. 2 is given below:

Total loss of galena in 4.50 kilograms of slimes (including losses)	=	319.41 grams.
" " " " " sample No. 30	=	65.35 "
" " " " " tailings	=	58.14 "
" " " " " run No. 2	=	442.90 "
Total galena in sample run	=	1400.00 "

The amount of galena lost in the slimes was over six times as much as in the tailings.

§ 464. *Conclusions.* — Run No. 1 shows a loss of 1.92% in the tailings, and 6.14% in the slimes, of the total galena fed to the table. Of the loss in the tailings 62.62% is in the sizes between 0.15 mm. and 0.

The agitation ratio in sample No. 7 of the concentrates is 1.95: 1.00 as galena is to quartz, while in sample No. 18 of the tailings it is as 1.00 : 1.95. As No. 18 represents the best part of the tailings, it is evident that the larger the ratio between the quartz and the galena the cleaner the tailings will be. A classifier product has a ratio of 3.50 : 1.00 between quartz and galena, and a sized product has the grains of both minerals of approximately the same size. A classifier product will then outclass a sized product and should do better than this test has done with a natural or "mixed" feed.

Run No. 2 shows a loss of 4.15% in the tailings, and 27.48% in the slimes, of the total galena fed to the table.

The agitation ratio in sample No. 9 of the concentrates is 1.00 : 1.38 as galena is to quartz, and in No. 22 of the tailings it is 1.00 : 1.00. Sample No. 22 represents the best part of the tailings. These ratios are contrary to those in run No. 1, so with such fine sizes (below 0.15 mm.), abnormal conditions take place and such a feed is not suited to Wilfley table work.

From the results of the two runs, it is evident that the main loss in the tailings

is in the fine sizes. Hence, if the table is fed with classifier products and the overflow of the classifier or the first spigot of a pulsator classifier be sent to a vanner the loss in the tailings of a mill should be overcome to some extent.

The largest grains of galena are at the division line between the tailings and the middlings and in the latter. The finest grains are in the slimes, the next larger sizes and the fine flat grains are at the top of the concentrates-bands.

The largest grains of quartz are at the top of the tailings and the sizes decrease towards the concentrates and slimes.

The distribution of the grains on the table corroborates the ideal sketch shown in Fig. 208.

§ 465. General Comments on Rectilinear Tables. — The majority of rectilinear tables have brought the diagonal line to the corner. While there are certain advantages there are also certain disadvantages, as it is rather difficult to place under the corner a stationary divider which shall direct all the material coming off the concentrates side into its compartment, and prevent all that coming off the tailings side from contaminating it.

If the divider is plumb under the tailings edge of the table, some of the middlings will certainly go into the concentrates compartment; if the divider is in the direction of the diagonal, some of the middlings will be thrown into the concentrates. If the diagonal comes to the tailings side instead of the corner, and if the divider is placed at the end of it, the same difficulty exists. If, however, the diagonal ends on the concentrates side so far away from the corner that a large part or the whole will be discharged over the side, then, the divider being parallel to the motion and therefore to the swing of the falling particles, the division between concentrates and middlings, and middlings and tailings, becomes very perfect.

Again, a difficulty has always existed in keeping the table wetted on the concentrates side. Special spray pipes have been put on for this purpose which have the disadvantage that they disturb the direction of the movement of the lines of concentrates grains, and therefore interfere with any divider used. If the concentrates side of the table is cut off obliquely to the cross flow of the water instead of being parallel, the upper end being farther out than the lower, the spray pipe or launder on the feed side will then thoroughly wet the whole of the concentrates side without the additional distributing spray.

Comparing the two methods "tacking on" and "grooving" in order to obtain the tips in a diagonal line, the tacking on, as has been already stated, causes a slight valley between the two planes along the line of the tips, which narrows the fan of concentrates and necessitates a longer table; while the grooves, having no valley, give a wider fan and permit of a shorter table.

Summing up, the ideal table top seems to be the riffle groove cut in the surface, with tips ending in a diagonal line coming out at a point far enough from the corner upon the concentrates side to admit of having all the dividers placed on the concentrates side on the slope; while the concentrates side should be cut off obliquely so as to avoid the need of an edge spray.

§ 466. Comparison of Tables with and without Riffles. — In comparing the Wilfley table with its parent, the Rittinger, which had an unriffled surface and its movement caused by a cam, spring, and bumping post, we find three differences: (1) the great lateral extension of the Wilfley; (2) the riffles; and (3) the vanning motion. This great lateral extension of the Wilfley table spreads out the minerals in wider bands than on the Rittinger, so that there is no undue thickening of the pulp bed along one line tending to harmful directing of the water; it also permits a more exact division of the products.

The riffles increase the capacity of the table, because they can catch and convey a large amount of concentrates; they also enable the table to make a two-mineral separation with unclassified pulp, whereas on the Rittinger a perfect classification of the feed pulp is essential to success. With unclassified pulp the riffles provide for the coarse grains of concentrates by guiding them out to the point where they join the band of clean concentrates; and they provide for the finer grains by settling them in the riffle spaces, and then the coarse grains plough them along to the concentrates band. When more than two minerals are to be separated, however, the Wilfley requires the same care as the Rittinger in classifying the feed. While the vanning motion of the Wilfley undoubtedly has a more favorable action on the separation of the minerals than the bumping motion of the Rittinger, by keeping the bed softer and mobile, its chief advantage is that it does not strain and wear the machine nearly so much.

Tables with riffles have the advantage that the weaker grains of concentrates, which fail to be retained in the upper riffles, find in the lower riffles a place where the pulp is more loose and soft, so that they are relatively stronger than their neighbors, and can therefore be retained and conveyed either into the heads or into the middlings.

The tables wholly covered with riffles probably have the greatest capacity of all the tables upon ores with a large percentage of concentrates and upon coarser products. The greater the depth of the riffles up to a point where other complications come in, the greater will be this capacity, and the coarser the grain that can be treated. The tables having a combination of riffles, or cleaning plane, with a smooth or cleaned-ore plane beyond, are more advantageous for treating products carrying a small amount of concentrates, for treating fines, and for making a three-mineral separation, because the separation can be more perfectly completed on the smooth surface (where the particles spread out in fan-like bands with clear lines of demarcation between the different minerals) than in the riffles.

Of the tables having riffles followed by a smooth cleaned-ore plane, those that have the riffles ending on a diagonal line have the advantage that the light grains of concentrates which failed to be caught in the upper riffles, but are caught lower down, are carried out and delivered on the cleaned-ore plane more nearly in line with their would-be fellows than if the riffles were all of the same length.

The tables which have the cleaned-ore plane in the same plane with the tops of the riffle cleats, or cleaning plane, have the advantage that the fan on the cleaned-ore plane will open out much wider and therefore make the separation simpler and easier, particularly when it is a three-mineral separation.

All the tables have the lateral slope adjustable, this adjustment being in constant use. Some also have a longitudinal slope adjustment, which would seem to be an important help for occasional use.

The above combination of improvements, initiated by Wilfley in 1896, has given us the most efficient class of fine-sand concentrators yet produced. The improved design is continually finding new applications — for certain products it has displaced end-bump tables, vanners, slime tables, fine-sand jigs, and is even entering the field of the medium jigs; and it has probably not yet prospected its whole field of usefulness.

§ 467. Comparison of Side-Bump and End-Bump Tables. — The tables with side bump throw all the particles toward the side, while the water current rolls them down hill at rates varying with the size of the grains and their specific gravity, the larger and lighter grains moving faster than the smaller, heavier grains. The combination of these actions yields the particles spread

out like a fan, and it follows that the table can turn out heads, middlings, and tailings or it may yield more than three products, for example, galena pyrite, sphalerite, and quartz, each quality of mineral being guided into its own catch box. The end-jerking tables, on the other hand, separate the particles into layers, then by the jerk throw them toward the head end, and between the jerks the water rolls the grains in the top quartz layer toward the tail end. By rightly adjusting the slope the pyrite is jerked up hill and the quartz is rolled down hill. It follows that machines of this class can make only heads and tailings; and if it is desired to make middlings, with a view of producing cleaner heads, or to make a three-mineral separation, then two tables must be used, one following the other. The first will yield the galena, for example, as heads, and the sphalerite and quartz will go together into the tailings; the second table, re-treating these tailings, will make sphalerite as heads and quartz as tailings. This combination will give a much less perfect result, however, than the Wilfley, working upon sorted products.

VANNERS.

Vanners are used both as fine-sand and slime concentrators. They will be described here, however, as their chief use lies in this field.

§ 468. A vanner does its work on the upper surface of an endless belt which is slightly inclined from the horizontal and receives a rapid shake in the plane of the belt for stratifying the pulp. This agitation makes the bed so loose that minerals of higher specific gravity can settle to the lower layer, while those of lower specific gravity rise to the upper layer. A continuous slow movement of the belt up the slope drags the heavy mineral to the upper end, while the wash and feed water running down the slope washes the light mineral to the lower or tailings end.

There are four classes of vanners, the first three being of importance in the order shown, while the fourth is little used.

1. The side-shake, which vibrate at right angles to the direction in which the belt travels.
2. The end-shake, which vibrate parallel to the direction in which the belt travels.
3. Tipping or undulating motion at right angles to the direction in which the belt travels.
4. Gyrating in the plane of the belt.

II. *b* 1. SIDE-SHAKE VANNERS.

§ 469. THE SIDE-SHAKE VANNER (Fig. 213) has a main frame *G*, resting upon four posts 3 which are mortised into two heavy cross sills. Wedges 12 are provided to take up the slack between the posts and the main frame. Sometimes the main frame is made of iron and mounted on cast-iron legs held firmly in place by wooden struts and iron tie-rods. This frame consists of two longitudinal timbers *G* and three cross timbers *X* bolted together. Its slope can be varied from nothing up to 8 inches or more in 12 feet, by means of wedges 13 (or jack screws acting at the same points). It has eight toggle blocks *b* for supporting the shaking frame. The blocks have sockets supplied with rubber or leather cushions in the bottom for supporting the toggles *N*, and slots which allow them to slide in or out on their supporting bolts a total distance of about 2 inches. On each end of the middle cross timber is a lug 14, to which is attached the longitudinal guide bolt *V* connecting the shaking frame. The boxes *XXX* for the crank shaft *H* are bolted to the prolongation of the cross timbers, and they have slotted bolt holes which allow them to be moved toward or away from the belt. The hanger *S*

for the worm wheel L is bolted to the upper end of one of the longitudinal timbers G.

The shaking frame F consists of two longitudinal timbers into which five cross timbers are notched, and all are held together by five cross bolts. Bolted to each side there are four toggle blocks d, which serve to support the frame

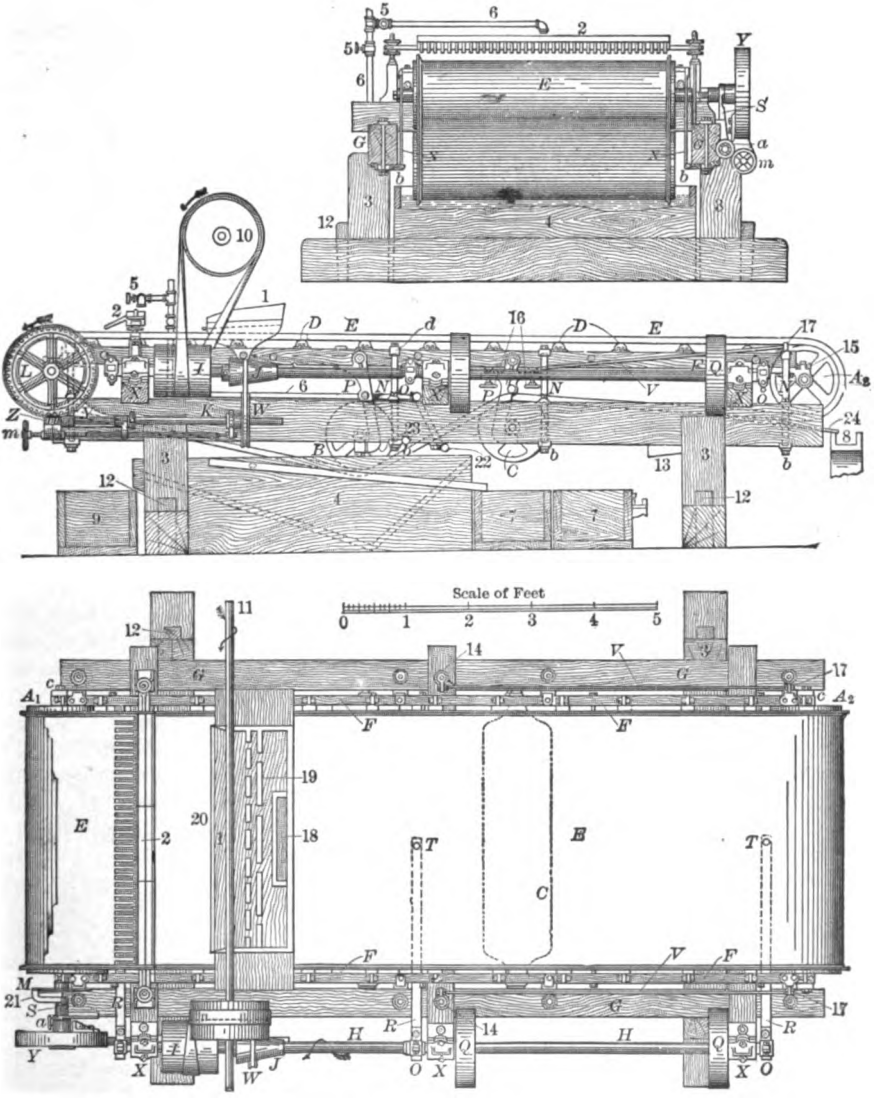

FIG. 213. — SIDE-SHAKE VANNER.

upon the toggles N. Special spring arms can be used instead of toggles. The boxes for the two end rollers are attached to the ends of the longitudinal timbers with bolt slots to allow for adjustment in and out, and set screws for this adjustment. These set screws are used to square the rollers, and to some extent to take up any slack in the belt. They may also be used, on the lower

end roller, to guide the belt, bearing in mind that the latter always runs toward its loosened side. The dipping roller *B* is hung from long hangers *P*, the tightening roller *C* on short ones. In order to withstand the shake of the frame, each pair of hangers is braced by two diagonal rods connecting the two hangers and having lock nuts on each end. The chief means of guiding, as well as of tightening, the belt consists of the hand screws 16, which control the position of the roller *C*. To guide the belt toward either side of the machine the end of *C* that is on that side should be moved toward the head of the machine. The tightening roller is shorter than the others and has rounded edges to save the belt flange. At 17 are the lugs by which the guide rods *V* connect the shaking frame to the main frame. These guide rods have lock nuts at both ends to square the whole shaking frame and to give it longitudinal stability. The bolts that hold the lugs 17 are the same that hold the toggle blocks at the tail end of the shaking frame and also the boxes for the large tail roller. Similarly, the bolts that hold the toggle blocks at the head end of the shaking frame also hold the boxes for the large head roller. Twelve small rollers *D* are mounted upon the shaking frame to support the belt. They are spaced 12 inches apart, except the four upper rollers, which are set closer in order to make a smoother plane where the final cleaning is done. The boxes in which these little rollers run are adjustable in and out, in order to allow the rollers to run easily without rattling. All the rollers, both large and small, are made of galvanized iron. The *concentrating plane* is that portion of the belt surface that is tangent to the tail roller and the ten little rollers above it. The *cleaning plane* is that portion of the belt surface that is tangent to the head roller and the three little rollers below it, and with a smooth belt it has a slope that is steeper than that of the concentrating plane by $\frac{1}{2}$ inch in its length of 25 inches, due to the fact that the head roller is elevated $\frac{1}{2}$ inch above the concentrating plane. With a corrugated belt the head roller is elevated $\frac{3}{4}$ inch above the concentrating plane. The feed distributor *l* is fastened to the shaking frame by means of slotted bolt holes, so that its height and slope can be adjusted. It has a copper amalgam box or trap 18, distributing blocks 19, and on its lip a sheet-iron gutter 20 punched with $\frac{1}{4}$-inch holes 1 inch apart. This distributor spreads the pulp evenly across the belt, and the copper box serves to catch amalgam when the pulp comes from amalgamated plates. The cast-iron wash-water distributor 2, which stands upon the main frame, is provided with little brass spouts $1\frac{1}{2}$ inches apart. It can be leveled by lock nuts on its two supporting posts, and the quantity of water fed to it from the pipe 6 is regulated by the cock 5. With a corrugated belt the wash water has a little greater drop than with a smooth belt, and is applied from two rows of spouts, alternately longer and shorter.

The main shaft *H* is supported upon the three boxes *X*, and receives power through the pulley *I*. It transmits a sidewise shaking motion to the shaking frame *F*, through the cranks *O*, the connecting rods *R*, and the fastening bolts *T*, the total throw being about 1 inch. It also transmits power, by the cone pulley *J*, the worm shaft *K*, the worm *Z*, the worm wheel *L*, the crank 21, and the spiral-spring connecting-rod *M*, to the head roller A_1, which causes the travel of the belt. Various other schemes for driving the belt have been used successfully. As it is necessary that the speed of the belt may vary, the hand screw *m* can move the flanged pulley *W* on a spline from the large to the small end of the cone *J* to suit all demands of speed. The shaft *K* is suspended by the hanger *Y*. The latter can be revolved upon its supporting axis, by means of the hand stop screw *a*, sufficiently to raise the pulley *W* off from its little driving belt. By this means the travel of the vanner belt may be stopped while the shaking motion continues.

When a vanner is started it should be examined to see that all the bolts and wedges are tight, that the little rollers are lined up to true the concentrating plane, and the large rollers adjusted to prevent excessive bagging of the belt between the little rollers. The machine being in motion, the proper quantity of water is turned on through the water distributor 2, and pulp of the right consistency is fed through the pulp distributor 1. Starting from the tail roller A_2 (Fig. 213), the endless belt moves slowly up over the little rollers of the concentrating plane, receiving its pulp from 1; then passes up over the rollers of the cleaning plane, under the water-distributor 2, over the head roller A_1 and down into the tank 4, where the belt is immersed by the roller B to remove the adhering concentrates. It receives a final cleansing from the spray pipes 22 and 23, and then passes over the tightening roller C, and returns beneath the tail roller A_2 to repeat these operations. The tailings are carried down the slope of the belt by the water current, and discharged to the apron 24 and the waste trough 8. The wash water, the quantity of which should be kept at a minimum, is used to remove the last of the quartz from the heads; and it also keeps the ore bed on the cleaning plane thoroughly wetted. If points or fingers of ore form, with crests uncovered by water, ore will float off by greasy flotation and pass into the tailings.

The concentrates may collect in the tanks and either be hoed out or may run out continuously through small spigots. In either case there will be an overflow, which goes to settling boxes to save the fines. Sometimes the whole vanner is raised one or two feet higher than usual, the dipping roller brought considerably forward, and an apron placed beneath and parallel to the belt where the latter passes from the dipping to the tightening roller. The concentrates, removed from the belt by inside and outside spray pipes, run down the apron into a launder that extends along the whole row of vanners at their head ends.

It is possible to discharge the concentrates in a nearly dry condition by placing a small plain roll just in front of the head roller A_1 close enough to the belt so that it will revolve by friction. This will cause the most of the concentrates to fall from the belt before reaching tank 4.

§ 470. An ingenious scheme called "Shackelford's Patent Box-cleaning Device" is shown in Figs. 214*a* and *b*. On account of the manual labor saved

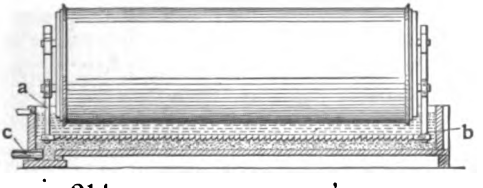

FIG. 214*a*. — SHACKELFORD'S PATENT BOX-CLEANING DEVICE

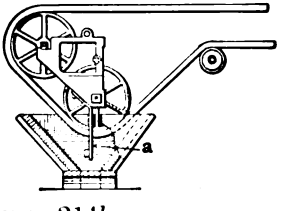

FIG. 214*b*. — LONGITUDINAL SECTION.

by this device in shoveling the concentrates from the vanner concentrates boxes one man is able to take care of 92 vanners per shift at the mill of the Boston Consolidated Mining Company in Utah. In Figs. 214*a* and *b* straps *a* have one end securely bolted to the shaking frame of the vanner, while the pushing device *b* is bolted to the other end. The pusher *b* is made by cutting saw teeth in a board or plank and, when the vanner is in motion, this board pushes the concentrates when traveling in one direction and slips over them on the return stroke. As the concentrates tend to heap up in one end of the

box they are discharged, with a small amount of water, through spigot *c*, the weight of the water above assisting in this work. If the spigot *c* is kept open and free from waste material this device works very well. It is, however, adaptable only to side-shake vanners unless a special arrangement be made for giving it a side shake from the mechanism.

§ 471. *Vanner Belts* are made of 2-ply rubber (about 0.175 inch thick) and have flanges on the edges to confine the pulp. The original vanner belt has an erect flange, 1.125 inches high, made of high-grade, very elastic rubber, which stretches in passing over the end rollers and returns to its normal size after passing them. Flanges are made in a great variety of shapes and ways. They may or may not stand vertical when not stretched, and they may bend inwardly or outwardly when passing the end rollers according to the make. They are usually thicker than the main belt and have at least one layer of canvas in them for strength; but some belts have only a crimped flange which simply straightens on going over the rollers, with less stretching than have other forms. A hollow or tubular flange with the inner wall vertical, the outer bowing outwards, has met with some favor. This flange flattens and inclines outward during its passage over the end rollers. Fig. 215 shows a section of one form of vanner belt with its flanges.

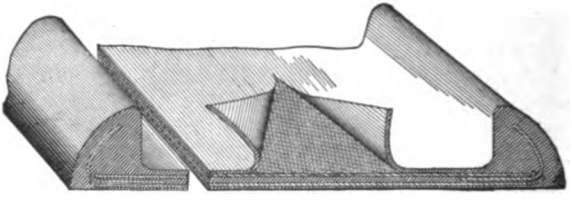

FIG. 215. — VANNER BELT.

Belts are from 4 to 6 feet wide and the length of the concentrating or cleaning surfaces is 12 feet. The belt generally has a smooth surface, but corrugated belts (originated by F. B. Morse) are coming into favor. The latter have V-shaped grooves cast in the rubber across the belt, the sides of the V making a 60° angle. These grooves have been made as wide as $\frac{1}{8}$ inch, and as narrow as $\frac{1}{32}$ inch. They increase the catching power of the belt greatly, yielding cleaner tailings; but they also unavoidably carry extra quartz into the heads. The finest sizes of corrugations appear to be best adapted for receiving the advantage of this device, with less tendency to carry up quartz into the heads.

Modifications of the corrugated belt have been devised, using a narrow band of corrugations and a wide band of plain surface on the belt. This form has met with considerable favor. The corrugated spaces come forward periodically and sweep up grains of ore that a plain belt might lose. At the same time, the contamination of the heads by quartz is largely prevented. Belts have been designed with the surface having many fine pits approaching coarse sand-paper in roughness.

The author is aware of one mill using a canvas belt, which costs $7 against $120 for rubber, and lasts 6 months against 4 years for the rubber; that is, the rubber belt costs 17 times as much, but lasts only 8 times as long as the canvas. The author is unable to state the comparative effectiveness of treatment. The canvas probably holds the ore better than the smooth rubber, but it would depart more from a true plane in going over the little rollers than would the stiffer rubber belt. With proper care, rubber belts generally last from 3 to 5 years, depending on the amount of time they are idle.

II. *b* 2. END-SHAKE VANNERS.

§ 472. THE END-SHAKE VANNERS (Fig. 216) resemble the side-shake vanners in many respects. The essential difference is in the direction of the shaking motion, which is endwise. It is made with an iron main frame 1, which is fixed, and an iron shaking frame 2 which oscillates endwise on ten wooden toggles 3. It receives its shaking motion and endwise stability from two connecting rods 4, and its sidewise stability from four rods 5. It has a head roller 6, tail roller 7, dipping roller 8, tightening roller 9, and twelve little supporting rollers 10. The head roller is made slightly crowning in the center to keep the belt true. The power is received by a pulley 11, and delivered through cranks or by some other means to the connecting rods 4. The cranks make from 200 to 240 revolutions a minute. The belt travel is imparted by the friction disc 12, and pulley 13, the worm 14, gear 15, and pinion and gear 16.

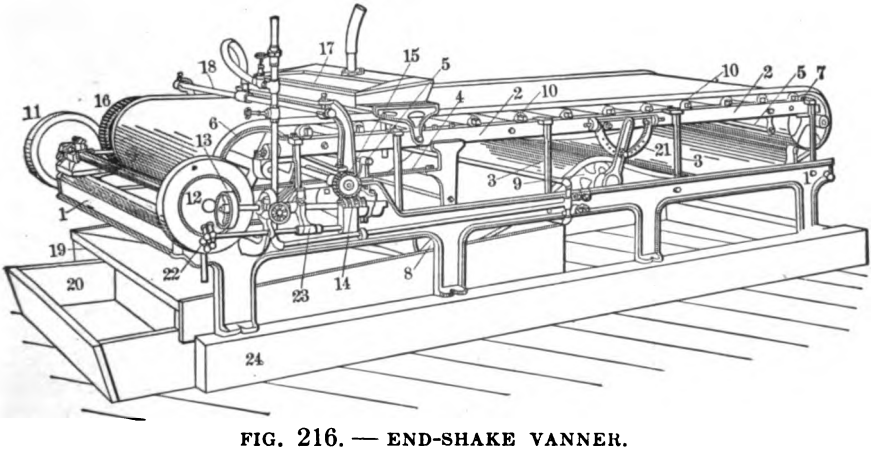

FIG. 216. — END-SHAKE VANNER.

It may be increased or decreased by moving the friction pulley 13 from or toward the center of the disc 12. The little countershaft for making this adjustment simply slides in its boxes by the action of the hand-screw 22 and the arm 23. The method of obtaining the same results is different in some designs. The slope is varied by blocking up the sill 24 under the main frame 1. The pulp distributor 17 is attached to the shaking frame 2, and the wash-water distributor 18 to the main frame 1. The heads tank 19 is raised and lowered with the main frame 1. It is so constructed that the heads can be withdrawn by a hoe into a box 20 in front, from which they are shoveled to a wheelbarrow. The tightening roller 9 can be swung upon and bolted to the semicircular piece 21 in order to tighten the belt; and to guide the belt the piece 21 can be moved a short distance toward the head or tail by set screws. The belt moves toward that end of the tightening roller which is swung toward the head end of the machine. The feed, the operation, and adjustments of the end-shake vanners are much the same as those of the side-shake. Adjustments to get rid of side banks are not needed.

Sometimes instead of one wide belt several narrow belts are used side by side on the same frame. When this arrangement is used the pulp is usually fed on in rows, or files of holes, lined up with the length of the belt, leaving wide spaces of the belt to travel up past the feed without having the stratified ore particles molested by it.

II. *b* 3. VANNERS WITH TIPPING OR UNDULATING MOTION.

§ 473. TIPPING OR UNDULATING VANNERS. — The chief difference between these vanners and the ordinary side-shake vanners is in the fact that, instead of a horizontal side shake, they have an undulating motion imparted to the shaking frame, which is designed to prevent the sands from piling up against the edges of the belt. This vanner is shown without the belt in Fig. 217.

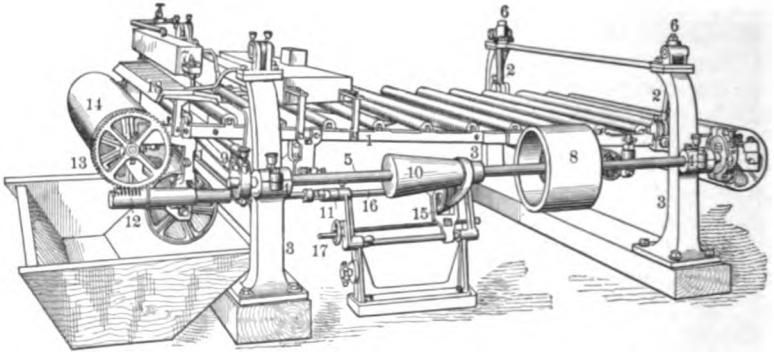

FIG. 217. — FRAME OF TIPPING OR UNDULATING VANNER.

The shaking frame (1), instead of being supported from below, is suspended by four non-parallel suspension links (2), one at each corner, which, when attached to the stationary frame, are about 3½ inches farther apart than the lower ends which are attached to the shaking frame.

The stationary frame consists of wooden base frame timbers. On the base frame are mounted four hollow cast-iron posts (3) which are braced with struts. The upper ends of these posts are the supports for the links (2) by which the shaking frame is suspended. They also form, on one side of the machine, the supports for the journal boxes (4) of the main driving shaft (5) and, at the head end, for the water box (7). The two links at the rear end of the vanner are so arranged as to permit of raising or lowering the shaking frame through nuts (6). The shaking frame, which carries the five drums, is made of channel irons and rods and is so arranged that it can be made square by lengthening or shortening the diagonal tension rod provided for that purpose. The effect of supporting this frame by the links, as described above, is to impart to the table a motion which tends to toss the grains nearest the edges of the belt back toward the center in a manner somewhat analogous to the action of the Ferraris screen.

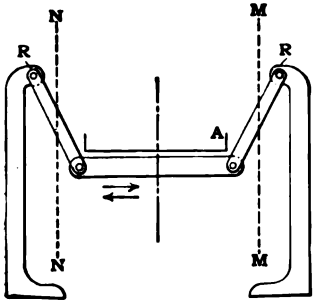

FIG. 218. — EXAGGERATED DIAGRAM OF MOTION OF TIPPING OR UNDULATING VANNER.

This may be more apparent from the exaggerated Fig. 218. The vanner belt with its upturned edges is there represented as resting upon the shaking frame which is suspended from the corner posts by non-parallel links. The figure is a cross-section, through two links, across the belt. Now if the shaking frame is swung right and left no farther than the dotted lines *M-M* and *N-N*, the two edges of the table will move in arcs

of circles whose centers are at R and R, the upper supports of the links. The effect of this on a grain resting at A will be to move it toward the center of the belt; for, as the frame moves to the left, it rises, carrying the grain to the left with it, but as the frame moves to the right, the belt has a tendency to drop away from the grain and to travel a certain small distance to the right farther than does the grain. Since this operation is taking place many times per minute, its effect is greatly multiplied. This effect is so regulated as not to interfere with the even distribution of the pulp over the surface of the belt. The shaking frame simply undulates, there being one point at the exact center line of the belt which travels in a truly horizontal line at all times. This mechanism does not interfere with the concentrates on the belt, however, as is apparent from the good work this vanner is doing.

Power is supplied to the pulley (8) and is transmitted by means of the two eccentrics (9) to the shaking frame, and through the cone pulley (10), universal joint (11), worm (12), and gear (13) to the head roller (14) which advances the belt. The pulley (15) is secured to the shaft (16) by means of a spline or feather in such a way that by turning the hand wheel (17) the speed of belt travel may be readily adjusted.

The feeding device of this machine differs somewhat from the usual method. The supply of pulp after passing through a staggering device is received upon the metal bottom of the pulp box. This pulp box is provided with slots which are parallel to the edges of the belt, ¼ of an inch wide and 10 inches apart. The pulp is therefore fed upon the belt in lines 10 inches apart, and when it spreads out and the heavier portions settle upon the belt they are not disturbed by the further addition of pulp. The concentrates, while being carried to the head end of the shaking table on the traveling belt, pass under the clear water box which is solidly supported by the main posts. The water from this box flows first to a distributor (18) which is attached to the shaking table and moves with it; and from the distributor the water is delivered through a series of small tubes placed about 5 inches apart. The concentrates are then removed in the usual manner by passing the belt into a tank of water underneath the head end, where a spray of water assists this operation while a way is provided for turning a wash-off spray onto the idle side of the belt, if this should be desirable. The settling box, for saving the fine material which is kept in suspension by the agitation of the water in the concentrates tank, is not placed immediately under the machine but at some distance.

Adjustments to guide the belt may be made on any one of the three drums of this vanner; the head and tail rollers are in movable bearings adjusted by set screws and there is also a movable drum beneath the machine.

The gentle movement due to the low speed adds much to the life of the machine, and the low flanges (½ inch high), possible because the sand does not reach the edges, add to the life of the belt.

§ 474. Comparison of Side-Shake and End-Shake Vanners. — There is a marked difference between the manner in which the concentrates are carried up past the pulp distributors on the two styles of machines. The side-shake vanner has a pulp distributor with ¼-inch holes 1 inch apart, from which streams of pulp fall upon the belt. The side shake causes these streams to waggle so much that they more or less disturb the concentrates as the latter pass the distributor. The fine grains so disturbed get into the quick water and are carried down the belt to settle again, and try once more to run the gauntlet of the pulp distributor; though the coarse grains easily pass up the first time. On the other hand, the end-shake vanners give an endwise waggle to the pulp streams, so that the concentrates are less disturbed when passing up by the distributor. The reason that so much quartz goes into the concen-

trates when using an end-shake vanner is because the jets of cleaning water tend to flow down in gutters and the concentrates to come up in little banks, from which the last of the quartz is less easily removed than with the side-shake.

Another disadvantage of the side-shake machines is the formation of banks and gutters at the edges of the belt, in which the separation cannot take place as well as in the middle. These banks are due to the fact that, as the belt flange moves inward, it momentarily compacts the ore near it, and only partially thins it on the return stroke. This may be largely overcome by running the vanner with a thin bed (from 0.15 to 0.20 inch thick over the little rollers). The end-shake vanner almost entirely avoids the formation of banks and gutters, and so the treatment at the edges is almost exactly the same as in the middle. The relative losses at the sides and at the center of a side-shake vanner have been tested in a mill where samples taken for a period of twelve hours yielded:

	Middle.	Edges.
Silver, ounces per ton	1.20	2.00
Copper, percent	1.05	1.35

These edge banks are entirely done away with in the tipping or undulating side-shaking vanners. This tendency to form rich edge banks is an important feature in comparing vanners. Other things being equal, the vanner that has the least edge enrichment would seem to be the better machine. The author has no data in this direction for end-shake vanners.

The side-shake vanner shakes its sixteen rollers (twelve small and four large rollers) endwise, and in so doing throws the whole weight of the rollers against their boxes, tending to move the latter and produce a back-lash, which once established makes a bump at every throw of the machine and forms a bank of sand on one side of the belt. The end-shake vanner has no such cumulative effect, and hence the annoyance of bumps is much less liable to occur, and of banks still less, the two connecting rods and eccentric straps being the only points at which a bump can occur.

Both practical experience and theoretical considerations point clearly to the conclusion that the end-shake principle is better than the side-shake for very fine pulp. For coarse pulp, the summing up of the evidence seems to prove that if clean heads are desired the side-shake vanner must be used; but if the cleanest tailings are sought, even at the expense of a little extra quartz thrown into the heads, the end-shake vanner should be used. Corrugated belts do better work with coarser pulp than smooth belts and vice versa for fine pulp.

II. *b* 4. GYRATING VANNERS.

§ 475. GYRATING VANNERS receive, upon all parts of the belt, a motion that would be circular but for the travel of the belt. The two motions combined give a path like Fig. 219, while the path on a side-shake vanner is shown in

FIG. 219. — INDICATOR CARD FROM GYRATING VANNER.

Fig. 220 for comparison. These machines do not seem to have found much favor in the mills.

OPERATION OF VANNERS.

§ 476. In using vanners, it is necessary to consider the proper quality of feed pulp, the vibrations, rate of travel, slope, quantity of water, and the depth of the pulp bed. These are taken up in a general way in Table 103,

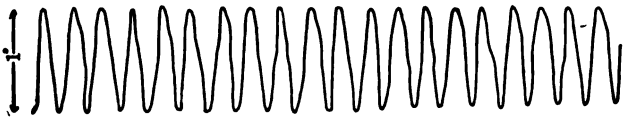

FIG. 220. — INDICATOR CARD FROM SIDE-SHAKE VANNER.

which shows the maximum, minimum, and average conditions under which various types of vanners are operated in plants visited by the writer. The student, in referring to this table, should remember that a single vanner seldom, if ever, has all of its operating conditions maximum, minimum, or even average at one time.

TABLE 103. — OPERATING CONDITIONS AND DETAILS OF VANNERS IN VARIOUS MILLS.

Condition.	Water. Gallons per Minute.			Tons of Ore Handled per 24 Hours.	Ratio by Weight of Feed Water to Dry Ore.	Ratio by Weight of Total Water to Dry Ore.	Slope. Inches in 12 Feet.	Travel. Inches per Minute.	Number of Throws per Minute.	Length of Throw in Inches.	Horse-power. Loaded.	Horse-power with Belts and Pulleys.	Kind of Belt.	Depth of Pulp in Inches.
	Fed with Pulp.	For Cleaning Jets Above and Below.	Total on Belt.											
4-foot Side-Shake Vanners.														
Maximum	7.50	2.80	10.30	12.50	7.6	10.7	6.00	72.00	200	1.00	0.23	0.83	Smooth.	0.43
Minimum	1.50	1.00	2.50	4.00	1.6	2.4	2.25	22.00	180	1.00	0.23	0.50	"	0.10
Average	4.25	1.35	5.60	7.50	4.0	5.4	3.42	39.38	191	1.00	0.23	0.67	"	0.21
6-foot Side-Shake Vanners.														
Maximum	7.00	5.00	12.00	16.67	.....	.....	4.50	72.00	282	1.50	0.75	0.97	Smooth.	.....
Minimum	7.00	1.50	8.50	3.00	.....	.....	3.25	36.00	150	0.50	0.16	0.38	"	.....
Average	7.00	3.21	10.21	7.41	.....	.....	3.75	46.40	197	0.99	0.31	0.68	"	.....
4-foot End-Shake Vanners.														
Maximum	.....	.....	10.40	3.75	.....	16.7	3.00	26.00	240	1 00	.....	0.44	Smooth.	0.27
Minimum	.....	.....	10 40	3.75	.....	16.7	3.00	26.00	200	0.50	.....	0.44	"	0.14
Average	.....	.....	10.40	3.75	.....	16.7	3.00	26.00	220	0 75	.....	0.44	"	0.20
5-foot End-Shake Vanners.														
Maximum	18.00	2.75	20.75	15.00	7.2	10.7	8.80	72.00	240	1.00	.....	.....	Smooth.	0.33
Minimum	18.00	2.75	12.67	5 00	7 2	7.1	5.40	48.00	200	0.63	.....	.....	"	0.15
Average	18.00	2.75	16.71	9 47	7.2	8.7	7.10	60.00	212	0.81	.....	.....	"	0.22
6-foot Tipping or Undulating Vanners.														
Maximum	3.00	1.50	11.00	18.00	....	.....	6.0	.....	210	2.00	.....	0 50	Corrugated	.....
Minimum	1.50	1 00	2 50	8 00	.....	.....	4 5	.....	120	2.00	.....	0 50	"	.....
Average	2 25	1.25	5.88	13.67	.....	.....	3 0	.....	163	2 00	.....	0 50	"	.....

§ 477. *Quality of Feed.* — Pulp is fed to vanners from gravity stamps and sometimes from other fine crushers, and usually after passing over an

amalgamated plate. Occasionally a vanner is fed from the tailings of a previous jig or vanner. A practice which is logical and economical is to feed vanners with the middlings from convex, revolving, slime tables because this feed is so free from the fine rich slimes which are difficult for the vanner to handle. The maximum size of grain actually fed to vanners in some of the stamp mills ranges from 0.41 to 1.13 millimeters, the most common size being about 0.75 millimeter (0.03 inch). Callow says that the proper consistency of a vanner feed is from 800 to 900 grams of solids per gallon of pulp.

In regard to classifying pulp for vanners, it must be remembered that a classifier will not do satisfactory work unless the quantity of feed water is regular. Vanners have successfully treated classified pulp from hydraulic, surface-current, and whole-current classifiers; and the overflow from hydraulic and whole-current classifiers. There is a wide difference of opinion as to whether or not it is wise to classify the feed to vanners if it is finer than 30 mesh. As a classifier adds one more apparatus and loses 2 or 3 feet of mill height, the only justification for its use, under the above considerations, is when the ore contains a large percentage of sulphides which slime badly and there is a perfectly constant water supply, which is seldom found in stamp mills due to the constant hanging up of stamps or to other causes. On the other hand, 20-mesh material has been sent to a hydraulic classifier and the classified products successfully handled by vanners with increased capacity due to the classification.

§ 478. *Vibrations.* — The number of vibrations and amount of throw are interdependent and must be considered together. If a high speed is adopted, a small throw must be used to prevent injury to the machine and allow the concentrates to settle; and vice versa, if a low speed is adopted a long throw should go with it in order to soften the pulp sufficiently to allow the quartz to rise to the upper layer. The amount of throw is generally one inch in all the standard vanners, but some designs have the eccentrics adjustable for greater or less throw, to suit varying conditions. For other details the student is referred to Table 103.

§ 479. *The travel* of the belt is the adjustment on which the mill man chiefly relies for regulating the vanner. Details will be found in Table 103. The travel of the corrugated belt is generally faster than that of the smooth belt. The purpose of the belt travel is to carry the concentrates to the upper end. If it is too rapid it will carry up quartz into the concentrates, and if it is too slow it will allow concentrates to be washed down into the tailings.

§ 480. *Slope.* — The amount of slope is all important: too much sends the valuable mineral into the tailings; and too little sends the quartz into the concentrates, and tends to make the bed too thick, and to form banks on the sides of the side-shake vanners. When a corrugated belt is used the inclination is greater than with a smooth belt (see Table 103) by 2 or 3 inches in 12 feet.

§ 481. *The quantity* of water is also quite important; too much washes the valuable mineral into the tailings, too little allows the quartz to pass up into the heads. It is well both for economy of water and for the saving of slimes, to use as little water as will do the work. Clayey, talcose, slaty, and calcareous ores all form a glutinous pulp and should, therefore, be more dilute than quartz ores. Talc may even form a slippery coating on the belt, which needs to be brushed off from time to time with a corn broom. Corrugated belts usually require more wash water than smooth belts. For details see Table 103.

§ 482. *Travel, slope, and pulp water* all depend upon each other, and must therefore be discussed together. To carry off quartz more rapidly toward the tail of the machine, we may either decrease the travel, increase the slope, or increase the pulp water. Conversely, to carry pyrite more rapidly toward

the head of the machine, we may increase the speed of travel, decrease the slope, or decrease the pulp water. Two or even all three of these adjustments may be changed at the same time.

In regard to slope and travel, it will generally be found that, with other conditions remaining the same, steep slope needs a high speed of travel, and gentle slope needs a slow speed. A corrugated belt requires a steeper slope than a smooth belt.

There are three chief qualities of pulp which will call for variation in the slope and travel. They are: specific gravity of the heads and of the tailings; relative quantities of heads and tailings; and the size of the grains. If the heads are of low specific gravity, they may need more rapid travel or gentler slope, or both, than when they are of high specific gravity. If the tailings are of high specific gravity, they will probably need steeper slope or slower travel, or both, than would be the case with tailings of lower specific gravity. If the percentage of concentrates is large, a quick travel must be used to prevent the sheet of heads from being abnormally thick, because a thick sheet of heads will entangle much quartz. A steep slope will then be needed to take away the quartz. If these charges are not made and the machine is run normally, the quantity of feed will have to be less than it would be if it contained a smaller percentage of heads. Very fine pulp will be treated best with steep slope and rapid travel, and with but little water in the pulp. Very coarse pulp will, in the author's opinion (although positive data is not at hand), be best treated with gentle slope; and with this it may be found best to use a large quantity of water, and slow vibrations of very long throw. This combination may cause the pulp to slop over the flanges of a side-shake vanner, and therefore be available only on end-shake vanners.

The proper quantity of water in the pulp varies inversely with the slope and directly with the travel. Where the slope is steep or the travel is slow, the quantity of pulp water must be low to prevent loss in tailings; and where the slope is gentle or the travel is fast, the pulp water should be in larger quantity in order to make clean heads and to prevent the bed from becoming too thick and forming side banks. Practical details are shown in Table 103.

§ 483. *The bed of pulp on the belt*, when a vanner is running properly, will be graded in richness from the head to the tail end, the heads being nearly free from gangue, the tailings nearly free from concentrates. Four or five percent. of quartz is commonly allowed to go into the heads for the sake of preventing the tailings from carrying off too much value. The great length of the concentrating plane is provided because the removal of the heavy mineral from the gangue takes place gradually. The author is of the opinion that in ordinary practice the best thickness of the bed from the pulp distributor to the tail roller is from 0.15 to 0.20 inch over the little rollers; and he believes it should never be more than 0.25 inch thick. It will, of course, be somewhat thicker between adjacent rollers. If the bed is too thick it will "felt" (form a peculiar hard cake), which prevents the separation of the minerals. With a thick bed in the case of fine pulp, a side-shake vanner may set up waves from each side of the belt, and if these opposite sets of waves happen to coincide they will produce longitudinal banks and gutters all the way across the belt. Good separation cannot be made in these banks, while in the gutters there will be rapid currents that will tend to carry concentrates into the tailings.

The number of grains in the depth of the ore bed is important. A bed 0.2 inch thick, with grains 0.02 inch (0.5 mm.) in diameter, is ten grains deep and permits easy separation. If it was 0.5 inch thick it would be 25 grains deep, and the work of separation difficult. It is evident, then, that the finer the pulp the thinner should be the bed.

To properly run a corrugated belt, the bed should be thinner than on a plain belt, and have almost no edge banks. This is accomplished by a steep slope. The logic of this is that the catching power of the belt is so great that we can afford to flow the quartz off to the tail end more rapidly; and we thereby increase the capacity of the machine.

With a vanner properly adjusted the depth of the bed will be very nearly uniform. If the concentrating plane is true, there may be a slight tendency of the bed to thin from the distributor toward the tail roller; if the bed is untrue the measurements of the bed will show it. In Table 103 will be found some actually measured depths of beds.

If, on a side-shake vanner, thick, dead banks form on both sides of the belt, they indicate that the bed is too thick, caused either by too rapid travel, too gentle slope, or too little water in the feed pulp. Changing either of these adjustments will effect a cure; but to decide which to use, the mill man should try them all, one at a time, and adopt that which removes the evil and at the same time gives the cleanest tailings. If the sand and water are not evenly distributed upon the belt, first be sure that all the parts of the machine are in line, that the slack is taken up, and that there is no jar or bump in the machine. If a bank still forms on one side, it indicates that the shaking frame is not vibrating equally in both directions upon the toggles. The under toggle blocks on the main frame must then be adjusted by slackening their bolts and tapping them with a hammer, to overcome this unevenness. They should all be moved toward the side that has no bank. If this is not sufficient, the shaft boxes may be moved toward the belt if the bank is on the further side, or away from the belt if it is on the nearer side.

§ 484. *Capacity and Power.* — To be driven at its greatest capacity, a vanner needs rapid travel, in order to prevent the sheet of concentrates becoming so thick that the gangue cannot separate from it. Steep slope must then be used in order to carry the gangue down the slope. An ore with a large percentage of concentrates must not be fed as fast as one that contains less concentrates, because the sheet of concentrates would become too thick. When a vanner is driven beyond its natural maximum capacity, some concentrates will be lost in the tailings for lack of time for proper treatment. Very fine ore must be treated slowly, else the bed will be too thick even if the slope is steep. If it be attempted to overcome the difficulty by dilution with water, there is great danger of loss in the tailings. Corrugated belts have a greater capacity than smooth belts. For operating details see Table 103.

§ 485. *Cost of Repairs, Renewals, etc.* — Table 104 gives an idea of the cost of repairs per year on a number of vanners in use in the mills. These figures include the cost of new belts, which is roughly $120 for smooth belts. Corrugated belts are much more expensive.

TABLE 104. — COST PER YEAR OF REPAIRS AND RENEWALS OF A VANNER.

	Maximum.	Minimum.	Average.
Cost of new belt and repairs on same	$103.00	$3.82	$36.90
" " other repairs	12.00	1.12	5.87
" " total repairs and renewals	115.00	4.94	42.77

With the information already given the student should be able to figure very closely the concentrating cost per ton with vanners. Under the most favorable conditions one man can keep as many as 92 vanners running per shift. From 1 to 16 machines are all one man can attend to under adverse conditions.

THE PRINCIPLE OF VANNER SEPARATION.

§ 486. It is well known to mill men that vanner tailings carry away a portion of the finest grains of the heavy mineral, and it is often stated that this loss consists of only a few accidental particles. The author believes, however, that when ore carrying grains ranging from a diameter of 0.75 millimeter down to the finest slimes is treated without previous classification, a considerable percentage of the finest particles of heavy mineral must go into the tailings; and, just as in free settling and hindered settling, finer grains of heavy mineral are balanced with coarser grains of quartz, according to definite ratios, so with any given set of adjustments of a vanner, there will probably be a definite ratio between the maximum diameters of quartz and of heavy mineral in the

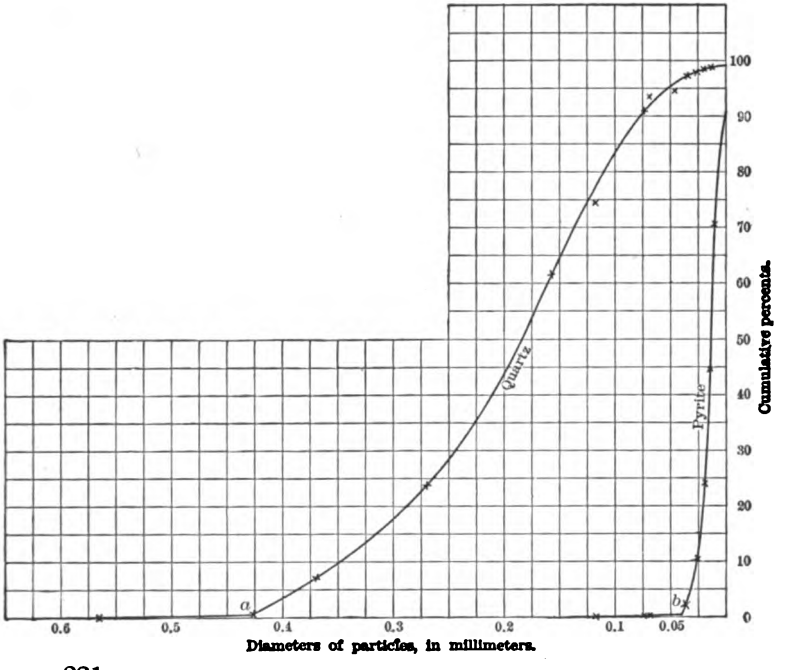

FIG. 221. — PLOT OF SIZING TESTS TO DETERMINE AN AGITATION RATIO FOR VANNERS.

tailings. This ratio will be called the *agitation ratio*. To substantiate his opinion, the author has only to point to a mill which treats tailings from well-run vanners by means of a hydraulic classifier and canvas tables. The spigot product from the classifier carries all the coarser sizes of quartz with practically no pyrite. The overflow goes to canvas tables followed by a specially adjusted finishing vanner, and yields a final product amounting to about 1,000 pounds of clean pyrite per day, while the previous vanners yield about 2¾ tons of clean pyrite per day. That is, more than 15% of the pyrite fed to the first vanners is too fine to be saved with the coarser portion.

As a preliminary determination of the agitation ratio, the author made sizing tests of the classifier spigot product, and of the final concentrates of the canvas tables showing the sizes of quartz and of pyrite in the first vanner tailings, and the results are given on the cumulative plot, Fig. 221.

The three coarsest sizes of the concentrates contained a very little quartz and pyrite only in cemented grains, and the free pyrite in the next four sizes was respectively 0.1%, 0.1%, 0.1%, and 1.8% of all the concentrates. The remaining sizes were all free pyrite. As we are concerned only with the free pyrite in this product, the few stray quartz and cemented pyrite grains were disregarded in plotting. Referring to Fig. 221, it will be noticed in the case of both quartz and pyrite that a line drawn through the points representing the few coarsest grains has a very different direction from the rest of the curve; in fact, there is apparently a significant point on each curve (a and b). The few grains coarser than a and b are insignificant in quantity and may be disregarded. Practically, then, the maximum size of quartz (a) is 0.427 millimeter, and pyrite (b) is 0.040 millimeter, giving an agitation ratio $\left(\frac{a}{b}\right)$ of 10.7. This ratio will be much affected by the way the vanners are run, and probably be a maximum only when the pulp bed is thin (not more than 0.2 inch thick) and all the adjustments are made to the best advantage. The average depth found in the above test was 0.16 inch, so that the ratio 10.7 was obtained under favorable conditions.

A thick bed will send coarse pyrite into the tailings and so reduce the ratio. The determination of the ratio in any mill is a good test as to whether or not the vanners are well run.

§ 487. CARE OF CONCENTRATORS. — It is quite necessary for the efficient operation of concentrating machinery that it be kept clean. The operator should go over all working parts frequently with cotton waste, so that no dust or grit will have a chance to work into the bearings, and the entire frame should be wiped off at least once a day. This applies to all types of concentrating machinery.

CHAPTER XIII.

SLIME CONCENTRATING.

§ 488. In this chapter will be taken up a class of concentrators which, while many of them may be used as fine-sand concentrators, find their chief application in the treatment of a pulp containing ore too finely comminuted to be called "sand" and which is usually called "slimes." Few, if any, of these machines when used with a pulp adapted to concentration by the machines described in Chapter XII, will effect a really successful separation and, therefore, each class of concentrators has its own field, even though the line between the two may be rather loosely drawn.

Slime concentrators, as a rule, utilize the current transportation of water running down a slope with or without agitation. As in the case of the fine-sand concentrators these devices may be classified as follows, the simplest and oldest methods being taken up first:

I. Concentrators with the separating surface stationary.
II. Concentrators with the separating surface in motion.

I. Concentrators with the Separating Surface Stationary.

§ 489. These machines include some of the "film sizing" tables and use the relative transporting power of a film of water on a quiet surface (which may be either smooth or rough), to act upon the particles of a water-sorted or classified product. The smaller grains, of higher specific gravity, are moved down the slope slowly or not at all by the slow undercurrent; the larger grains, of lower specific gravity, are moved rapidly down the slope by the quick upper current. This class may be subdivided as below:

(*a*) Those with an intermittent feed and discharge.
(*b*) Those with a continuous feed and discharge.

(*a*). Slime concentrators with a stationary separating surface and an intermittent feed and discharge.

This class of separators includes Cornish or "rag frames," canvas tables, and building tables or buddles.

Cornish frames.

§ 490. Cornish "Frames" are used for washing fine slimes in the Cornish tin works. They are plane, rectangular, wooden surfaces, and are often built tandem, so that the tailings of the first table are re-treated on the second. After the pulp has flowed over the tables for a few minutes, the tailboards are turned up so that each table will discharge into a special concentrates launder; and clean water is applied at the same time, to wash down the accumulated concentrates. The lever that tilts the tailboards is connected, by a rod, to the lever that turns on the water, so that the two operations are performed together. When the concentrates have been washed down, the tail-

boards are returned to their original positions and the operations repeated. The changes are made either by hand, or automatically as shown in Fig. 222.

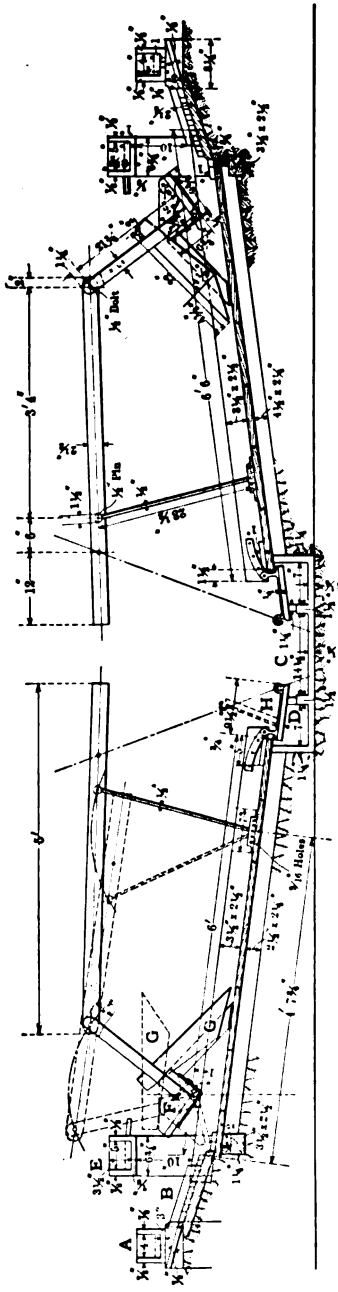

FIG. 222. — SECTIONAL VIEW OF CORNISH AUTOMATIC FRAMES.

The water containing "tin" in the form of slimes flows through the launder *A*. At the bottom of this launder there is a hole through which the "tin" slimes fall on the distributor *B*, which distributes the feed evenly over the whole surface of the table. As the slimes are flowing over the surface of the table, the tendency is for the lighter slimes to pass over into launder *C* and for the heavier to remain on the table until they are washed off into launder *D*.

The launder *E* conveys clear water and supplies buckets *F* and *G*. The water that flows into bucket *F* serves to wash the heavier "tin" off the table. This washing is caused by the tipping of bucket *F*, owing to the center of gravity changing with the incoming clear water. At the same time that the bucket *F* tips, the flap *H* at the bottom of the table is automatically raised on hinges and the heavier slimes and clear water drop off into launder *D*. While this is happening bucket *G* is being filled with clean water and, when the bulk of water has attained a certain center of gravity, the weight of water in this bucket causes it to tip and bring bucket *F* and flap *H* back into their original positions.

CANVAS TABLES.

§ 491. CANVAS TABLES are inclined rectangular tables covered with canvas (cotton duck). The pulp, to which clear water is added if necessary, is evenly distributed across the upper margin. As it flows down, the sizing action of the film operates more effectively than with a smooth surface. When the meshes have become pretty well filled with concentrates, the flow of pulp is stopped, the remaining quartz washed off with clear water, and finally the concentrates either hosed or broomed off. As the warp always projects higher than the woof, a piece of duck will offer more resistance by placing the warp across the table than down the table; on the other hand, a coarser duck laid lengthwise may have the same effect as a finer duck laid crosswise. The great length of the tables, combined with the limited width usually adopted, makes it generally advisable to lay the duck lengthwise.

These tables should be fed with a classified feed, but they are often fed with a mixed product. The author has observed the following products fed

to canvas tables in the mills: (*a*) Overflow of hydraulic classifiers. (*b*) Overflow of cyanide tanks. (*c*) Overflow of riffle boxes. (*d*) Vanner tailings. (*e*) Whole stamp-mill pulp. In the last three cases canvas tables could properly be called fine-sand concentrators.

Very wide tables are often provided with a distributor such as is shown in Fig. 223. At the foot of the diverging guides there is a little dam perforated

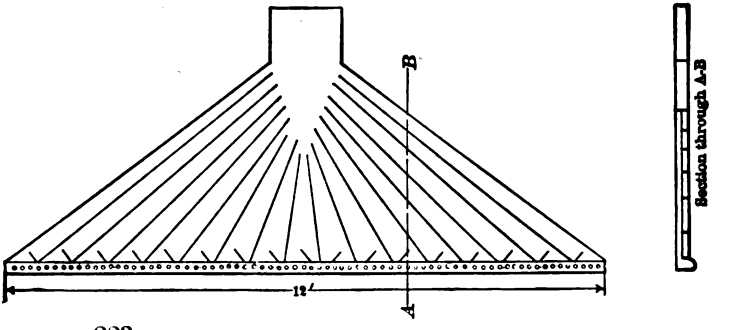

FIG. 223. — PULP DISTRIBUTOR FOR CANVAS TABLE.

with holes 2 inches apart for the final distribution of the pulp. Such tables are usually arranged in two rows, each row having its own tailings launder, while a central concentrates launder serves for both. (See Fig. 224.) The central launder, however, has a dividing partition in it to serve as a splash board, and to allow the concentrates from one side to be kept separate from those of the other in case of need.

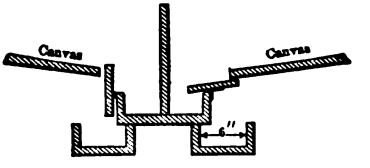

FIG. 224. — TAILINGS AND CONCENTRATES LAUNDERS FOR CANVAS TABLE.

Various grades of cotton duck are used ranging from No. 4 to No. 8. Each side of the latter has a life of about 5 months when washed off with a wide, flat, broom-shaped jet, which is much more effective than a corn broom, and, moreover, the use of a broom halves the life of the canvas. No. 6 duck has a total life of approximately 8 months. Sometimes the cloth is protected from the wear of the feed stream at the upper end by a board 5 or 6 inches wide. The canvas is usually slipped up a little every four or six weeks to relieve it from the wear due to the joints on the board table beneath, and when worn out on one side, so that it ceases to catch well, it is turned over. When a new canvas is put on the old one is burned, the ashes being worked up for gold. Sixteen-ounce duck costs about 5.5 cents per yard and lasts one year.

Details of sizes, capacities, film thickness, slopes, etc., may be found in Table 105 (see page 368), as compiled from a number of mills visited by the author. If the pulp that is fed to a canvas table is talcy, the table should have a gentler slope than otherwise, as the slippery quality of talcose ore hinders the canvas from holding the mineral on a steep slope.

At one plant 3 men were required to take care of 26 canvas tables and one vanner per 24 hours, at another 4 men took charge of 62 canvas tables and one vanner, while at a third plant 25 canvas tables required the attention of 4 boys. Oftentimes the concentrates from the canvas tables are still further cleaned on a smooth-belt vanner. Per square foot of surface area canvas tables require about 0.042 gallon per minute of water in the pulp and 0.022 gallon per minute of wash water figured on total operating time.

TABLE 105. — DETAILS OF SIZES, CAPACITIES, FILM-THICKNESS, SLOPES, ETC., OF CANVAS TABLES.

Condition.	Length in Feet.	Width in Feet.	Slope.	Capacity. Tons in 24 Hours.	Thickness of Film in Inches.			
					Head.		Tail.	
					Crest.	Trough.	Crest.	Trough.
Maximum	42.00	12.00	14° 05′	4.56	0.140	0.130	0.160	0.130
Minimum.....	9.00	1.25	3° 20′	1.15	0.063	0.050	0.069	0.040
Average	19.18	7.34	6° 53′	2.35	0.083	0.070	0.094	0.067

§ 492. One device for improving the work of a canvas table is to fill a board cover nearly full of nails which are staggered and rest evenly on the canvas, supporting the cover about 1.5 inches above the canvas. These combs or pins act as small riffles tending to precipitate the floating mineral particles onto the canvas. The canvas is usually covered with water-proof P. B. compound felt when this comb settler is used. The cover is manipulated by means of counterbalanced weights.

BUILDING TABLES.

§ 493. BUILDING TABLES OR BUDDLES are stationary washers for sand or slime in which the ore gradually builds up until a bed 10 or 12 inches deep has accumulated.[1] The washing is then stopped and the products cleaned out. The building up of the sands is regulated by adjusting the tailboard which prevents the ore from rolling off the table. Buddles, like surface tables, (see § 499), must be fed with classified products, and when feeding begins the action is the same as on a surface table; but as the material builds up, the sizing takes place upon a bed of more or less moving sand instead of upon a solid surface. However, after the building begins, the action continues uniform, so that the finer grains (heavy mineral) are deposited near the feed, and the coarser grains (light mineral) at the discharge. Buddles have a quality which the surface tables do not possess, namely, the finer particles nearer

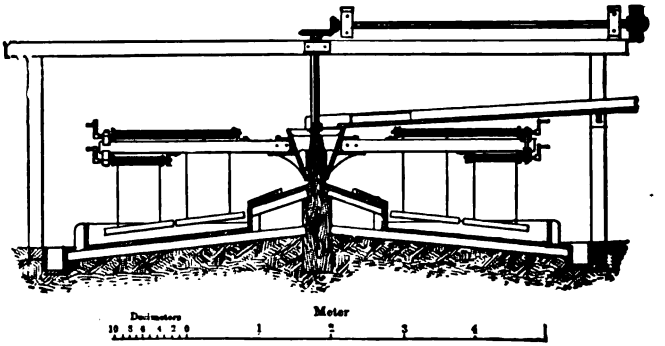

FIG. 225. — VERTICAL SECTION OF A CONVEX BUDDLE.

the head form a comparatively smooth surface on which the large grains easily roll, while the coarser grains nearer the tail furnish a rough surface. Each grain, therefore, has conditions of current and of surface suitable for stopping it at its proper place. The buddles are made convex conical, concave conical, and rectangular.

§ 494. THE ROUND CONVEX BUDDLE shown in section in Fig. 225 has

[1] The term *buddle* is also used to designate a surface sizing table, but the author prefers to confine its use to the class here described.

a feed cone with 3 feet radius, 18° slope, and with its outer edge 9 to 12 inches above the washing surface. The radius of the tail board of the buddle is 10 or 11 feet, giving a radial length of 7 or 8 feet for treatment. The tail board is 9 inches to 12 inches high. A launder is placed around the buddle to carry off the waste water. The bottom is laid upon sixteen rays of timber fastened to a central post, and upon these are nailed the bottom boards matched together as chords around the circle. The boards so laid are then planed to a true conical surface. A revolving conical feed hopper, fed by a fixed launder above, distributes the pulp to the feed cone, and upon the surface of the latter are distributing blocks for evening the feed. Two or more revolving arms with little drums, with crank, ratchet, and pawl, serve to regulate the height of the suspended sweeping bars. The latter are supplied with birch or corn brooms, or canvas sweeps. The central shaft stands upon the central post and is driven by beveled gears and pulleys. It revolves 8 to 12 times per minute. The brooms being properly set, the feed water is started, and the sand is shoveled into the feed box. The brooms level up the gutters and ridges and compel even settling. The formation of the building cone is watched, and if the sand builds too fast at the upper end it shows that the pulp is too thick, or that it is not fed in sufficient quantity. If the sand settles too thickly below, it shows that the pulp is too thin, or that it is fed in too great quantity. As the bed fills up, plugs are inserted in the perforated tailboard. When charged, the overseer tests the quality, if necessary, and marks off the different products in circles. The attendant then shovels each concentric product into its pile or bin or, if waste, to the waste launder. A buddle of this size is fed with 0 to 1-millimeter material, requires about 1.25 hours for charging, and has a capacity ranging from 180 pounds of the coarsest slimes to 80 pounds (dry weight) of the finest slimes per minute. The concentrates are sent to the kieve (see § 502), if rich enough; if not, they are set aside to accumulate and are re-treated on the buddle. The middlings are set aside to accumulate and are re-treated on the buddle. The tailings are waste.

A scheme of re-sorting the products which require re-treatment may be somewhat difficult to devise, and it is not on record as having been practiced, but it would add to the efficiency of the re-treatment, because these products are completely unsorted by the first buddling. A possible plan for accomplishing this result would be to feed the sand to a one-spigot classifier, send the spigot product to an unwatering hopper, the spigot of which would give an even feed to a jig; and to send the overflow of the classifier as feed water to a buddle, to which the usual charge of sand was added in the feed box.

Circular buddles range in diameter from 10 to 30 feet and in slope from 1 to 2 inches to the foot. The largest tables may require as long as 12 hours for charging.

§ 495. The Round Concave Buddle has the shape of a much flattened cone or funnel and nearly the same dimensions, capacities, and slopes of treatment surface as the convex. Pulp is fed to the buddle at the circumference through revolving launders with brooms, which receive their feed from a central pulp-distributing cone. A sloping feed apron is placed around the circumference. As the current of water flows toward the center it becomes narrower, and therefore deepens and increases in speed, thus increasing its carrying power. Hence a grain of heavy mineral that does not settle near the point of feed will move faster and faster as it approaches the center.

§ 496. Comparison of Convex and Concave Slime Tables. — Since a concave table receives its feed over such a large area, it can save considerable value from an ore carrying a high percentage of concentrates, but the tailings loss is necessarily high. A convex table, on the other hand, makes clean tailings.

The lighting and inspection of a convex table are much more convenient than of a concave table, on account of the direction of slope.

§ 497. THE RECTANGULAR BUDDLE is about 5 feet wide, from 8 to 12 feet long, and has ends and sides 1 foot high. It is charged, leveled, and discharged as the circular types. Its capacity varies from 35 pounds of coarsest slimes to 1.2 pounds of finest slimes per minute.

§ 498. A *tye* is a long, narrow buddle which is fed by shovel. It somewhat resembles the "run," but owing to the difference in the thickness of the water film in the two cases the former acts more by the sizing action of the film, while the latter acts more by the principle of free-settling particles. The *tye* is usually employed simply to separate the coarser from the finer portions, the former being found at the lower end, the latter at the upper end of the *tye*. This is done in preparation for the kieve.

(*b*). SLIME CONCENTRATORS WITH A STATIONARY SEPARATING SURFACE AND A CONTINUOUS FEED AND DISCHARGE.

§ 499. FIXED, CIRCULAR, CONVEX SLIME TABLES. — This type of tables has the advantage over the revolving type (see § 504) in that a conical cement surface can be made and maintained truer upon a solid foundation than upon a revolving frame. The foundations are made either of concrete or rough stone laid in cement with an approximately true surface, the final finished surface being obtained with a layer of pure Portland cement. A vaulted arch is constructed beneath on one side, Fig. 226, for introducing the feed pulp

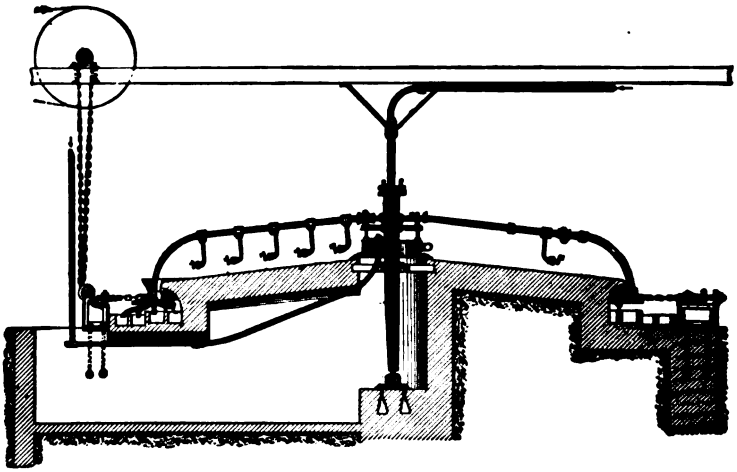

FIG. 226. — VERTICAL SECTION OF FIXED, CIRCULAR, CONVEX SLIME TABLE.

and oiling the step. The table is surrounded with as many fixed circular launders as products desired. For example, three would make heads, middlings, and tailings. The pulp, the feed water, and the wash water distributors revolve, as do also the spray pipes for middlings and wash-off pipes for heads, and also the catch hoppers for heads and middlings with the pipes for conveying them to their respective circular launders. The tailings run off the table directly into their launder. The revolving parts are either carried upon a circular carriage, as in Fig. 226, or upon arms radiating from a central shaft above. In the former case the wash water is distributed from the shaft itself, which

is hollow; in the latter case it is distributed from a revolving pan upon the shaft. In both cases the feed pulp, which should be classified, comes in from below through the arch and is distributed over about ¾ of a circle. The products are washed off the remaining 90° sector of the table.

The table is from 14 to 26.25 feet in diameter and the slope recommended is from 6° 20′ for the coarsest slimes (that is, for grains up to 0.25 mm. diameter) to 4° 30′ for the finest slimes. The moving parts revolve in from 2 to 4 minutes.

These tables differ from buddles on which the products accumulate to a depth of several inches and are then removed by hand, in that the products are automatically removed before they have formed a bed, so that the washing is always done on the same surface, and in this respect they resemble the revolving surface tables (§ 504).

II. Concentrators with the Separating Surface in Motion.

§ 500. This class of concentrators includes the remainder of the "film sizing" tables with the principles as discussed on page 375. Some of the bumping or jerking tables, with and without riffles, fall in this division. They use mechanical agitation to stratify the heavy and light grains on a washing surface, and a bumping or jerking action to convey the heavy grains to one side or end of the machine, while the current of surface water conveys the light grains to another side or end. Concentrators having agitation without a transporting current are also grouped here. This group of concentrators may be further divided as follows:

(*a*) Those with an intermittent feed and discharge.

(*b*) Those with a continuous feed and discharge.

(*a*). Slime Concentrators with a Moving Separating Surface and an Intermittent Feed and Discharge.

§ 501. Kieves, or Tossing Tubs, employ the agitation of a deep mass of thick fine pulp in which the particles of higher specific gravity settle. They are little used in this country, but in Europe they are quite common in connection with building tables or buddles, the concentrates from which are usually further enriched and cleaned by tossing.

§ 502. *Kieves* are strong tubs with sides flaring upward. Stirring paddles are used for preliminary mixing, and hammers or heavy striking bars for the final separation. They have been successfully fed with products as coarse as 1.36 mm. in diameter and of the fineness of slime-table concentrates, but with a much finer feed the process becomes tedious, because of the long time required for settling.

The kieve has a shaft, with a crank for revolving it by hand, in a movable top bearing, and in a step at the bottom. On the shaft is a pair of paddles of the form of propeller blades, which tend to lift the pulp and stir it thoroughly. The operation is as follows: Water is run in by a hose up to a mark, found by trial. One or two men revolve the paddle about fifty times per minute, while another shovels in the ore, which is moist. When the required amount is charged, the shaft is kept revolving for a minute or two to thoroughly liquefy the pulp. Then the top support and the shaft are quickly lifted out and a bent pounding bar, standing in a wooden step in the floor, is made to deal repeated shocks to the sides of the kieve, perhaps fifty blows per minute. The blows are received upon a plate screwed to the side of the kieve. The pounding bar is so bent as to strike the kieve a little above the middle. The pounding is kept up until the particles have settled themselves into a compact deposit at the bottom (an almost "hard pan"), with the quartz grains largely at the

top and the ore grains in layers below. This requires perhaps 15 or 20 minutes. The water is now siphoned off and the layers are skimmed out with a shovel. The layers are roughly as indicated in Fig. 227.

The concentration occurs partly during the stirring, but an important part takes place during the pounding. While the water from below passes upward among the grains, the fine, high specific gravity grains settle below the coarser, lower specific gravity grains, according to a ratio which is probably that of *hindered settling*. Sometimes in Cornwall, England, both the paddles and the pounding bar are driven by power.

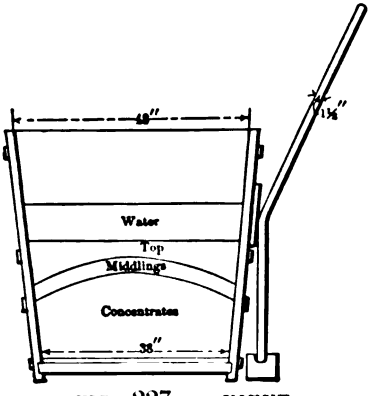

FIG. 227. — KIEVE.

§ 503. *Dolly Tub or Continuous Kieve.* — A deep, cylindrical tub, with the revolving kieve paddles, has been used for treating larger quantities than is possible with an intermittent kieve. It must be fed at a point about half or two-thirds the way up from the bottom to the top by a central hopper and tube. The overflow can be discharged all round the top and caught in a circular launder. The action is less perfect than that of the intermittent kieve, as the hammering is omitted. It probably ranks as a classifier working under hindered-settling conditions, and using much less water than any other form. It yields a continuous overflow, and either a continuous spigot product or an intermittent one as desired.

(*b*). SLIME CONCENTRATORS WITH A MOVING SEPARATING SURFACE AND A CONTINUOUS FEED AND DISCHARGE.

This class of slime concentrators includes the rest of the "film-sizing" tables, which are sometimes, though erroneously, called "buddles" and shaking tables.

FILM-SIZING TABLES.

§ 504. REVOLVING, CIRCULAR, CONVEX SLIME TABLES have the form of a very much flattened cone with its axis vertical and its center higher than its margin. Pulp is fed over a portion of the surface on the pulp or sand side of the table near the center, and as it flows down the slope it spreads out, and the film becomes thinner, loses carrying power, and increases in settling power. The revolution of the table continually carries the pulp round past a series of clean water distributors, on the washing side, which wash and remove the different products most advantageously as to place, time, and manner, the different products being caught in separate launders around the circumference.

§ 505. *As a good example* of modern construction a three-deck table is here described and shown in Figs. 228*a* and 228*b*. By three decks is meant three tables one above the other on a single shaft. It has a main frame of four horizontal timbers, one above the other, connected by end posts. The lowest acts as a sill and also carries the step; the other three carry boxes for the vertical shaft; and in the spaces between these four bearings are placed the three decks or tables. Each deck consists of an umbrella frame with rays and supporting braces. Each table has one socket hub for the rays and one for the braces, and the socket hubs are fastened to the shaft by set screws. The rays of the two upper decks are set at a slope of 5° 21′, those of the lower deck at 5° 57′. The rays are united by planks laid as chords of circles. Their

surfaces are planed to a true cone for the support of the boards which form the washing surface. The outer ring in this table is stiffened by a ring of boards on edge, which prevent sagging of the surface between the rays. The surface boards, which are commonly of white pine, are sawed of the proper sector to lay them radially, are tongued and grooved, and then nailed in place.

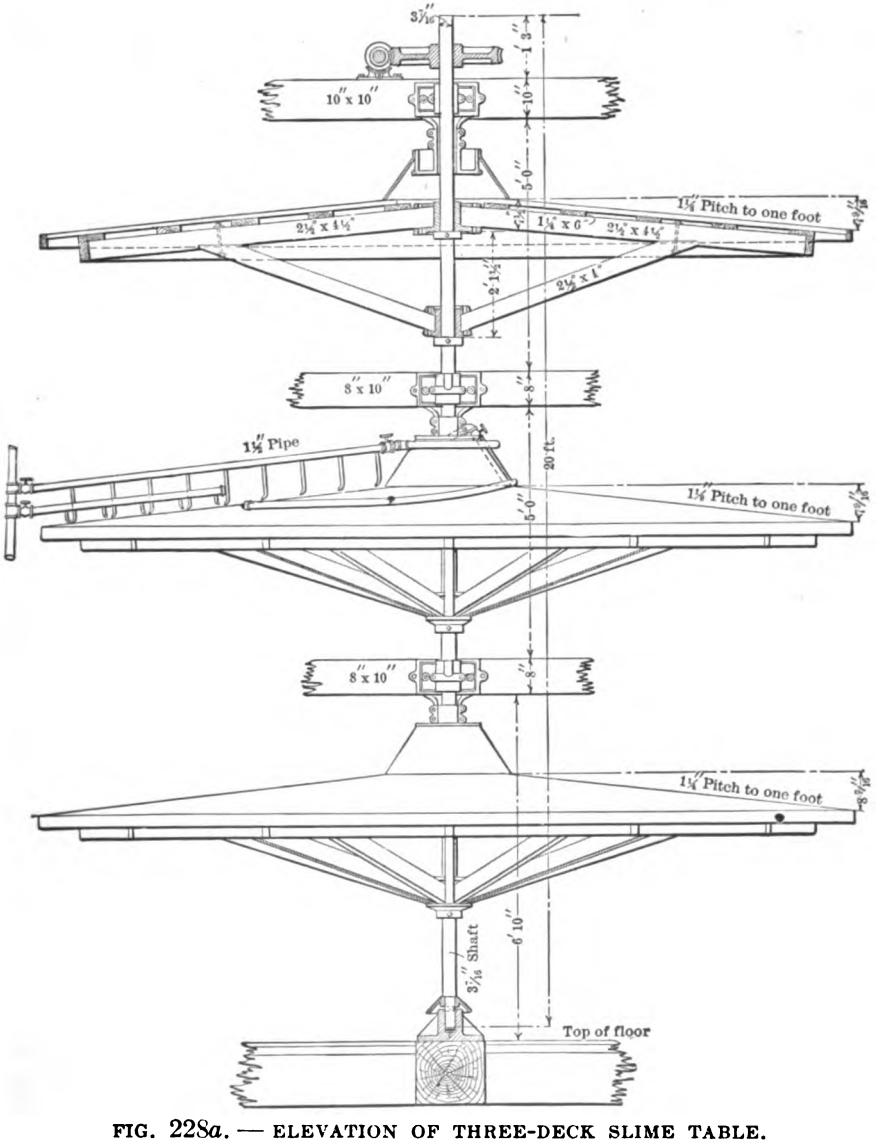

FIG. 228*a*. — ELEVATION OF THREE-DECK SLIME TABLE.

The surface is brought to a true conical form by a hand plane, and water is then turned on the table. This whole operation, from the time the log is taken from the pond of the sawmill until the water is turned on the table, is done as rapidly as possible, to prevent the boards from drying, shrinking, and warping.

The slightest warp spoils the work of the table, as it makes gutters of quick water conveying the heads down too far and ridges of slow water holding back the tailings from rolling down as they should. A table of this kind once made should never be allowed to dry.

The feed pulp is distributed by a central cone with 45° slope, which is fixed to the main frame and therefore does not revolve. This cone has upon it a split cup feed, that is, a cup divided into halves by a vertical partition. One half feeds pulp to one side of the table, while the other can feed clear wash water to the other side of the table or the wash water may be applied from a

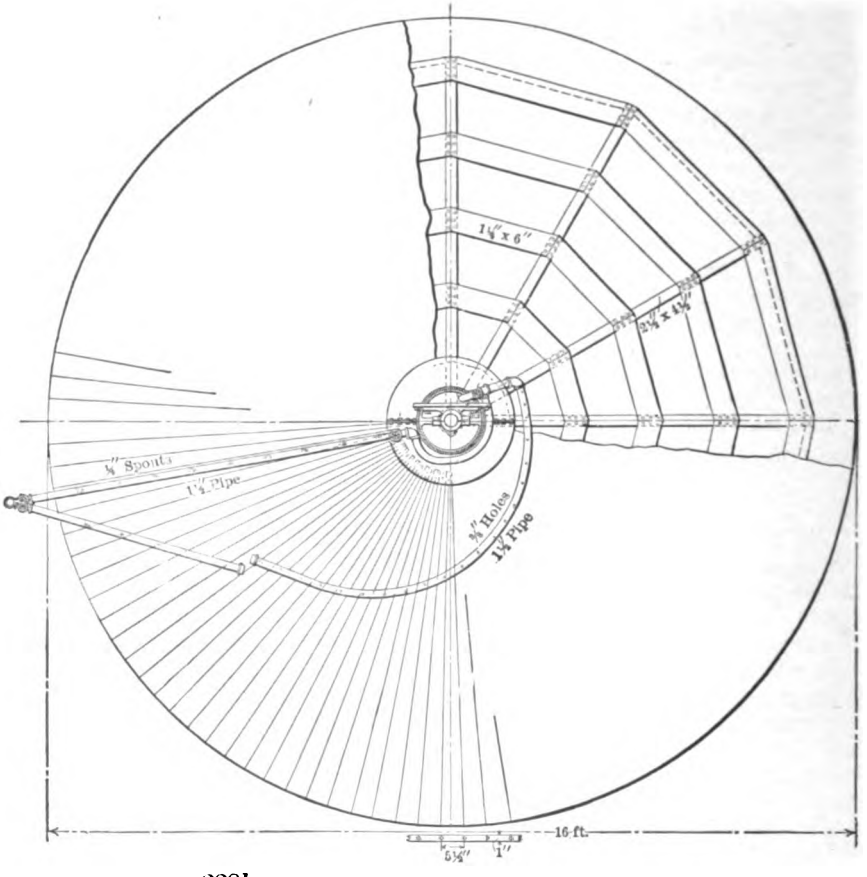

FIG. 228*b*. — PLAN OF THREE-DECK SLIME TABLE.

spiral spray pipe. These spray pipe jets directed vertically downwards keep pushing the quartz down hill, while allowing any concentrates that are sufficiently cleaned to pass between them. A straight pipe inclined 30° from the radius, with five jets, directed tangentially and opposed to the direction of the table, is provided for washing off the middlings; and to remove the heads there is a radial pipe directed obliquely against the motion of the table. There is also a pipe to dilute the feed pulp in case sufficient water is not fed with the pulp. The author would advise connecting all these pipes to the hydrant by separate valves to give independent regulation. The table is given very

slow speed (one revolution in 70 seconds in this case) by worm gear. It is surrounded by a circular launder which catches everything that runs off. This launder is partitioned to catch the tailings, middlings, and heads separately and each compartment has its own spouts for continuous discharge of its products. These partitions are placed to suit the quality of products.

The discharge edge of a circular slime table should be rounded. If it is square, a bead of water and sand will always rest upon and be carried forward by it, and in this way quartz may be carried into the heads. This bead sometimes goes so far as to produce on the table a solid bank of imperfectly washed material.

§ 506. *Summary of the Devices Used on Revolving Convex Tables.* — There are four parts of the slime table which vary in different designs, namely, the devices for feeding the pulp and the wash water, and those for the removal of the middlings and the heads. The removal of the tailings is practically the same on all tables. Pulp may be fed to a revolving 45° cone built upon and revolving with the table; to a fixed cone attached to the main frame; or to one-half of a split cup attached to the main frame and combined with a fixed 45° cone or a fixed apron, the pulp simply flowing over the edge of the cup and down the cone or apron. The wash water may be supplied by a spiral spray pipe playing directly upon the surface of the table, each stream having its own regulating cock; by a circular spray pipe playing upon a 45° central cone; or by the split cup with a fixed spiral or circular apron. The middlings may be washed off by a straight or curved spray pipe placed at a slight diagonal angle with the radius of the table. The heads are washed off by more powerful jets varying from one large to nine smaller jets. Where the one or two larger jets are used they must be combined with the board scraper to prevent the dissipation of the force of the stream. Where the larger number of smaller jets are used they are directed diagonally toward the edge of the table and opposite to the direction of rotation. The tailings are washed off partly on the feed side of the table and partly on the wash-water side, probably more on the former than on the latter.

§ 507. Revolving, Circular, Concave Slime Tables have the form of a much flattened cone or funnel. Pulp is fed at the circumference over a portion of the surface, and wash water over the remaining portion. As the current of water flows toward the center it becomes narrower, and, therefore, deepens and increases in speed, thus increasing its carrying power. Hence, a grain of heavy mineral that does not settle near the point of feed will move faster and faster as it approaches the discharge. The different products are washed down and separately collected near the center of the table. These tables are not much used, but are sometimes found as feeders to convex tables when the ore has a large amount of concentrates. The comparison drawn in § 496 holds with equal force here.

§ 508. Operation of Circular Slime Tables. — The most important considerations in the use of slime tables are the size of the grains to be treated and the speed of the water current. The former depends on the preliminary classification, and the latter upon the slope of the table and the quantity of water used. Other conditions, which are more or less dependent upon the above, and all of which affect the process, are as follows:

The shape of the grains.
The specific gravities of the minerals to be separated.
The density of the pulp.
The rate of feeding the pulp.
The thickness of the water film.
The kind of surface.
The diameter of the table.

The speed of revolution.

The convex or concave construction.

§ 509. *Size of Grains.* — The larger the grains, up to a diameter equal to the thickness of the film, the more rapidly they are carried forward by the current; but grains which project above the film are retarded, because the full weight of the unimmersed portion is added to the water weight of the immersed portion. Further increase reaches a size of grain that will not move at all. Linkenbach recommends 0.25 mm. as the maximum size of quartz, and in practice the feeds do not carry more than 10% or 15% larger than this size.

§ 510. *Preliminary Classification and Specific Gravity.* — The ideal feed would consist of grains of uniform shape (spheres or cubes) with a definite ratio between the diameters of the two minerals. The grains actually obtained from the classifiers, however, depart from this ideal, because larger flat grains settle with smaller roundish grains, causing a considerable range in sizes; also on account of the presence of included grains of heavy and light minerals attached to each other in varying proportions, and finally, on account of the imperfections of the classifiers, the feed to tables almost always contains a greater range of sizes than should be treated together. The tailings losses on the feed side of a table consist of the flat or flaky grains of heavy mineral, and of the finest slimes which come into the feed through the imperfections of the classifiers. This second loss may be very serious. The tailings loss on the wash-water side is due to the approach of the heads toward the edge of the table. They comprise the included grains and a few of the larger grains of heavy mineral. The middlings contain included grains mixed with a little of the smallest quartz and the largest grains of heavy mineral. This makes a product that can be well treated on a vanner, but is difficult to finish on a second slime table. If samples are taken from points all around a slime table they will generally be found to be poorest near the point where the tailings first reach the margin, and become richer all the way round until the middlings partition is reached. The middlings are richer still, and the heads of course approach pure heavy mineral. If a sample is taken beyond the heads, where the first pulp water goes off, it will generally assay very high. This is from a little heads carried past the wash-off jets, but if the table is run properly the quantity should be so small as to be of little moment. It is, however, an important point to watch. The nearer the feed to a table comes to the ideal sorted product the more perfectly will it work.

The degree of sorting needed depends on the specific gravities of the minerals. The higher the specific gravity of the heavy mineral the greater will be the difference in size between the gangue and the heavy mineral in the pulp that comes from the classifier. Both the high specific gravity and the small size favor separation on the slime table, the former by the resistance offered to the water current, the latter because the particles do not project up into the rapidly moving layers of the water film. Hence, with such a heavy mineral as galena, less classification is required than with lighter minerals like sphalerite and chalcopyrite; but even with galena the very fine slimes will be lost if treated with the coarse portion.

§ 511. *Shape of Grains.* — Roundish grains are considered to behave normally; and rolling rather than sliding is considered to be the normal motion. Longish grains swing around, side to the current, and, on account of their less diameter, may roll with a different speed from that of their associates. Flat grains may lie down and fail to move altogether or, if very thin, may, by being floated, move down more rapidly than the normal grains. Arborescent, flaky, or leafy grains (for example, of native copper) move much faster than their size and specific gravity would indicate.

§ 512. *Slope of the Table.* — Very fine pulp requires steep slope, with but little water and therefore a very thin film; while coarse pulp requires a gentler slope, but with much water and therefore a comparatively thick film. This is based upon the fact that the work of the table is to size products consisting of sorted grains. If, however, the table served only to unwater the pulp, then the finer the grains the less should the slope be. With few exceptions, however, the mills do not appear to follow any particular rule as to slope and size of grain.

The slope of convex slime table in the United States varies from 3° 30′ to 7° 45′, 4° 10′ to 6° being the most common. Concave tables have a slightly steeper slope as a rule. European practice with convex tables is to use a slope varying between 4° 45′ and 9° 30′. Linkenbach gives the following figures:

	Stationary Convex Tables.	Revolving Convex Tables.
Coarsest slime.....	1.33 inches per foot. (6° 20′)	1.20 inches per foot. (5° 45′)
Medium slime.....	1.20 " " " (5° 45′)	1.09 " " " (5° 10′)
Finest slime.....	1.00 " " " (4° 45′)	1.00 " " " (4° 45′)

§ 513. *Quantity of Water.* — The greater the quantity of water the greater will be the speed of the current and the less its settling power. In the case of a circular convex table the water should be estimated with respect to the quantity which comes off from a foot of the circumference in a minute, since the most difficult part of the work of separation is done near the circumference.

The average quantity of water discharged from an 18-foot table on 1 foot of its circumference has been figured as follows from four tables in the Lake Superior district: With the pulp, 31.78 gallons per minute; as wash water, 10.58 gallons per minute; and as jet water, 9.48 gallons per minute. The maximum and minimum figures for the total water were 66.44 and 20.32 respectively.

§ 514. *The thickness of the film* on a slime table is much less than that of the pulp bed on a vanner, because the slope is steeper, and because the pulp is thinner. Thin pulp is necessary in order to have the ore only one grain deep on the table and thus get approximately individual treatment of the grains. The average of seventeen measurements of the film thickness on four tables shows the following results: On the crest of wave, 0.086 inch; in trough of wave, 0.040 inch.

§ 515. *Density of Pulp.* — Data on this subject are hard to obtain, but the average pulp feeding six different tables in the United States contains 9.8% of solids, while 16.0% is the maximum and 5.5% is the minimum. Linkenbach recommends 8 to 10%, but says that in practice tables are commonly fed with thicker pulp than this, which increases the capacity but also increases the losses in the tailings.

§ 516. *Kind of Surface.* — Five kinds of surface have been used: soft wood, cement, rubber, linoleum, and canvas. The effect of the surface upon the concentration varies with the roughness. The smoother a surface the less the particles are inclined to roll, and the less will be the retardation of the under current (due to friction). If a plate glass surface was used there would be a minimum drag upon the under current and the particles might slide down the surface without rolling at all. Both of these qualities are bad, and probably whatever advantage was gained by the trueness of the glass surface would be more than lost by these disadvantages. Wood has a slight roughness which inclines the grain to roll, and diminishes the speed of the under current. A cement surface does the same to a greater extent and needs a steeper slope in consequence. Rubber probably diminishes the under current, and linoleum perhaps even more. Canvas gives the greatest drag on the

under current of any of the materials used. Moreover, the meshes of the cloth furnish little pits or riffles into which the particles settle. Quartz particles that have been stopped by these riffles in the early stage of the operation are crowded out by the heavy mineral that follows: The author has only begun upon experiments in this line, but thinks the extraordinary advantages of a canvas surface can be gained if the right conditions of slope and speed of revolution are determined. For example, his experiments indicate that with a steep slope (7° 10′ to 9° 30′) and a speed of one revolution in 5 or even 10 minutes, a canvas surface will prove advantageous. This has been tried by two mills in this country: One in Idaho, working on galena slimes, had a comparatively gentle slope of 6° and a speed of one revolution in 74 seconds, with a diameter of 18 feet. The second, and more successful table, was operating in Arizona on calcite slimes and it had a slope of only 7° 10′, was 17 feet in diameter, and made one revolution per minute. It is used in some of the Harz Mountain mills with good results.

§ 517. *Speed of Révolution.* — The speed of revolution controls the amount of washing that is done. A table which revolves once in two minutes washes the ore twice as long as one which revolves in one minute. The revolution may range from such a rapid speed that centrifugal force interferes with the treatment, down to an indefinitely slow speed. In general it is affected by the following considerations: Thicker pulp requires faster speed than thinner to avoid too heavy an accumulation upon the surface; larger grains require faster speed than smaller, and steeper slope requires faster speed than gentler, other things being equal, because the particles are in both cases carried to the circumference more rapidly. The shorter the run down the slope, other things being equal, the quicker should be the revolution of the table, because the material reaches the circumference in shorter time. The faster the speed of revolution that is practicable in any case, the greater the capacity.

Slime tables in the United States make one revolution in from 41 to 155 seconds, with an average of 85. The 41 seconds record is much less than the others and it is on a very small table. Kunhardt speaks of tables in Europe revolving once in 30 seconds and once in 24 seconds respectively, as instances of the greatest speed, and of others revolving once in 180 to 270 seconds as instances of the slowest. The latter were working upon very dilute pulp.

§ 518. *Diameter.* — Revolving convex tables range from 10 to 30 feet in diameter, the usual size being from 16 to 18 feet, most frequently 18 feet. Since the thickness of the water film diminishes as it approaches the margin of the table, and since this method of concentration requires that the film shall not have more than a certain maximum thickness nor less than a certain minimum, it follows that convex tables can treat pulp only for a limited radial distance without having the film too thick at the start or too thin at the end. The real work of separation is done on the three or four feet of radius next to the circumference.

Tests have shown that with a small distributing cone the thickness of the film at the beginning of treatment is much greater than at the margin of the table, while with a wide distributing cone it is but little thicker. The author considers this fact an argument against large tables, but it does not condemn large distributing cones. The larger the diameter the greater will be the capacity of a table; but the greater also will be the central area on which no concentration can take place, and consequently, the greater the waste of floor and roof space. The advisable limit of diameter seems to be about 18 feet. To make the most use of floor and roof space tables are built two and even three decks high.

§ 519. *The capacity* of a conical slime table depends on the various con-

siderations that have just been discussed. The pulp should not be fed so fast as to interfere with individual treatment of the grains. The following capacities have been noted on tables operating on Lake Superior copper slimes:

Diameter in Feet.	Tons per 24 Hours.
16.0	14.0 to 18.0
17.5	11.5 " 22.0
18.0	18.0 " 20.0
20.0	12.0 " 13.0

In Harz Mountain practice, 24 to 36 tons are treated in 24 hours on tables from 16½ to 29½ feet in diameter, sloping from 1 in 10 to 1 in 12 and making 1 revolution in 3 to 4 minutes. Linkenbach gives the following figures as the capacity of his fixed convex slime table:

Feed.	Diameter of Table.	Capacity. Tons per 24 Hours.
Coarse slimes	19 feet 8 inches.	19.04
Medium slimes	21 feet 4 inches.	17.45
Fine slimes	23 feet to 26 feet 3 inches.	15.87

The author believes that 12 to 15 tons in 24 hours, depending on the size of grains, is a suitable quantity of feed to 18-foot slime tables.

§ 520. THE BELT FILM TABLES. — These machines have wide belts of rubber or painted canvas stretched between end rollers and supported upon numerous intermediate small rollers or upon a plane surface. One design gives the belt an up-hill travel like that of a vanner, but without any shaking motion. This yields only two products, heads at the upper end and tailings at the lower. Another design has the belt horizontal in its length but sloping from one side to the other. On this form the pulp is fed upon the rear upper corner of the traveling belt and spreads its products out like a fan, according to their power to move down the slope. Since the belt is fed with a sorted product, the upper band of the fan will have the highest gravity ore; the next band will have the next lower, and so on, down to the lightest tailings. These tables can yield heads, middlings, and tailings, or they can make a three or four-mineral separation. They differ from the slime tables in that they have an adjustable slope which adds one more variable for adapting the treatment to the ore. The slope may be diminished and the water increased, or vice versa. The slime tables, on the other hand, have a constant slope, and the quantity of water is the only possible adjustment. In regard to the thickness of the water film, it remains constant on these tables from the feed edge to the discharge edge, whereas it diminishes on the convex tables and increases on the concave tables.

These belts vary in width from 2 to 5 feet and in length from 13 to 24.5 feet, although there is really no limit to the length they might be made. They travel at from 20 to 40 feet per minute and the largest side-sloping belts handle about one ton per hour, require about 16 gallons of wash water per minute, and have a slope of 13.5° more or less.

EXPERIMENTS ON SIZE OF GRAINS, SLOPE OF TABLE, AND WATER QUANTITY FOR FILM SIZING.

§ 521. In order to contribute facts upon the best conditions of feed, of water, and of slope, the author prepared a series of closely sorted quartz and

galena products in the tubular classifier described in § 355. The following list gives the diameters of the grains of both quartz and galena in the several sand sorts, together with currents of water used in preparing them:

Average Diameters of Grain.				Currents in which Particles	
Millimeters.		Inches.		Fall.	Rise.
Quartz.	Galena.	Quartz.	Galena.	Mm. per Second.	Mm. per Second.
*0.0301	*0.0194	*0.00119	*0.00076	0.00	1.25
0.0335	0.0198	0.00132	0.00078	1.25	2.5
0.0568	0.0292	0.00224	0.00115	2.5	5.0
0.0772	0.0412	0.00304	0.00162	5.0	7.5
0.0982	0.0488	0.00387	0.00192	7.5	10.0
0.1423	0.0613	0.00561	0.00242	10.0	15
0.1875	0.0721	0.00739	0.00284	15	20
0.2254	0.1032	0.0089	0.0041	20	30
0.3416	0.1305	0.0135	0.0051	30	40
0.3880	0.1404	0.0153	0.0055	40	50
0.5241	0.1708	0.0206	0.0067	50	60
0.5892	0.1997	0.0232	0.0079	60	70

* These figures have less value than the others, because the diameters in this case range from the figures given to zero.

The table experiments were made on a table that had a ground plate-glass surface. This table could be supplied with any desired quantity of water distributed across its head, and could be set at any angle of slope. Experiments were tried upon each slime sort with a great number of water quantities, beginning with very little and increasing for each test. In each test, after gauging the water to the desired amount, the table was set horizontal and a small quantity of the slime sort was spread out upon the surface in such a way that there should be the least possible interference of the grains with each other. The slope was then gradually increased until four events took place: (1) The first quartz grains started; (2) all the quartz moved; (3) the first galena grains started; (4) all the galena moved. The angle of slope was measured and recorded for each of the four events. The two angles at which respectively all the quartz and all of the galena moved, that is to say, events (2) and (4) (which will be referred to as the finish angles), are considered to be the most important measures. As a rule three experiments were tried with each water quantity, upon each sand or slime sort. Tables 106 and 107 show the largest finish angle obtained for quartz and the smallest for galena. These angles have been chosen to bring out the least advantageous conditions found. The little end of the series of water quantities for small grains was where the water failed to cover the table; for large grains it was where events (2) and (4) occurred at nearly the same angle. The large end of the series for the finest slime sort was where events (2) and (4) took place together; and for the others, it was where the water quantity was absurdly large.

It will be observed that the method employed was to measure angles, films, etc., at the moment when a body at rest began to move. If the opposite plan, namely, to measure angles, films, etc., when a moving body came to rest, had been adopted, it would have represented more exactly what happens upon a convex conical slime table. The difficulties of making the tests by the latter method caused the selection of the former. The difference in results is that the figures for angles given in the table are slightly larger than they would be if the coming-to-rest method had been employed.

In examining the starting angles of galena and quartz it was noticed that the first grain of galena often starts at an angle smaller than the finish angle of quartz; but for several reasons this is not as serious a matter as might appear. First, there were only a few light grains of galena that started before the last of the quartz; secondly, they moved slowly, so that the quartz easily overtook

and left them behind; and, third, the occurrence was confined to those experiments that were near the least water quantity, and therefore outside the range of the best working conditions.

TABLE 106. — QUARTZ FINISH ANGLES, AT WHICH ALL THE GRAINS MOVE.

Pounds of Water per Foot of Width per Minute.	Millimeters per Second of Current which Lifts the Particles.						
	1.25	2.5	5.0	15	40	50	70
	Millimeters per Second of Current in which the Particles Fall.						
	0	1.25	2.5	10	30	40	60
	Quartz Finish Angles (Maximum of Three Trials in Most Cases).						
0.5	4°	3° 20′	1° 55′	3° 45′	11° 05′	7° 30′	8° 40′
1.0	3° 40′	2° 35′	2° 25′	3° 25′	7° 30′	5° 20′	5° 25′
1.5	2° 30′	2° 50′	2° 05′	3° 15′	4° 20′	3° 25′	4° 10′
2.0	2° 40′	2° 30′	2° 20′	3° 00′	3° 50′	3° 10′	3° 15′
2.5	.....	2° 20′	2° 00′	2° 35′	3° 30′	3° 00′	3° 00′
3.0	1° 05′	2° 35′	2° 00′	2° 40′	3° 10′	3° 10′	2° 45′
3.5	.....	2° 05′	2° 05′	2° 35′	3° 00′	2° 55′	2° 50′
4.0	.....	2° 15′	2° 10′	2° 40′	2° 50′	2° 50′	2° 35′
4.5	.....	2° 15′	2° 10′	2° 45′	2° 50′	3° 05′	2° 50′
5.0	0° 50′	2° 15′	2° 00′	2° 25′	2° 50′	2° 45′	2° 55′
5.5	.....	2° 00′	2° 15′	2° 45′	3° 05′	2° 50′	2° 40′
6.0	.....	1° 35′	2° 20′	2° 05′	3° 05′	3° 00′	2° 40′
6.5	.....	2° 00′	2° 10′	3° 15′	3° 25′	2° 50′	3° 10′
7.0	1° 05′	2° 05′	2° 00′	2° 40′	3° 30′	2° 55′	3° 15′
7.5	.....	1° 55′	1° 40′	2° 05′	3° 05′	2° 50′	3° 05′
8.0	.....	1° 40′	1° 35′	2° 00′	3° 30′	2° 55′	3° 10′
8.5	.....	2° 45′	2° 00′	1° 50′	3° 30′	2° 50′	3° 25′
9.0	0° 50′	1° 20′	1° 40′	1° 40′	3° 15′	2° 45′	3° 25′
9.5	.....	1° 35′	1° 35′	2° 05′	3° 10′	2° 45′	3° 15′
10.0	.....	2° 15′	1° 45′	2° 30′	3° 10′	2° 25′	2° 45′
10.5	.....	1° 50′	1° 50′	2° 10′	2° 15′	2° 05′	3° 30′
11.0	.....	1° 30′	1° 20′	1° 40′	2° 05′	2° 45′	4° 00′
11.5	.....	1° 15′	1° 25′	2° 05′	2° 40′	2° 20′	3° 05′
12.0	.....	1° 45′	1° 50′	1° 35′	1° 35′	2° 10′	2° 45′
12.5	.....	1° 30′	1° 55′	1° 50′	2° 10′	2° 20′	2° 40′

TABLE 107. — GALENA FINISH ANGLES, AT WHICH ALL THE GRAINS MOVE.

Pounds of Water per Foot of Width per Minute.	Millimeters per Second of Current which Lifts the Particles.						
	1.25	2.5	5.0	15	40	50	70
	Millimeters per Second of Current in which the Particles Fall.						
	0	1.25	2.5	10	30	40	60
	Galena Finish Angles (Minimum of Three Trials in Most Cases).						
0.5	15° 20′	.....	9° 00′	12° 45′	10° 40′	.....	.....
1.0	12° 20′	.....	11° 00′	9° 30′	10° 00′	.....	.....
1.5	13° 20′	7° 50′	8° 15′	7° 20′	6° 20′	8° 35′	9° 55′
2.0	7° 50′	10° 50′	6° 15′	7° 10′	5° 30′	7° 30′	9° 00′
2.5	.....	6° 25′	5° 50′	5° 50′	5° 05′	7° 10′	7° 00′
3.0	3° 05′	6° 00′	4° 15′	5° 15′	4° 40′	5° 55′	7° 30′
3.5	.....	7° 35′	3° 55′	5° 35′	4° 25′	5° 25′	5° 35′
4.0	.....	4° 30′	5° 00′	4° 45′	3° 55′	4° 55′	6° 10′
4.5	.....	4° 40′	5° 30′	4° 35′	3° 55′	4° 45′	5° 40′
5.0	0° 50′	6° 05′	5° 10′	4° 15′	4° 00′	4° 20′	5° 05′
5.5	.....	5° 15′	5° 40′	4° 00′	4° 00′	4° 05′	5° 10′
6.0	.....	4° 55′	5° 10′	4° 00′	3° 50′	4° 05′	4° 15′
6.5	.....	5° 40′	5° 30′	4° 05′	4° 00′	4° 15′	4° 40′
7.0	1° 05′	5° 15′	5° 25′	4° 15′	4° 10′	4° 20′	4° 50′
7.5	.....	5° 35′	4° 45′	4° 15′	3° 50′	4° 10′	4° 40′
8.0	.....	4° 55′	5° 45′	4° 20′	4° 05′	4° 10′	4° 25′
8.5	.....	5° 05′	5° 30′	4° 05′	4° 00′	4° 25′	4° 15′
9.0	0° 50′	4° 40′	6° 10′	4° 30′	4° 40′	4° 35′	4° 15′
9.5	.....	3° 30′	6° 00′	5° 00′	3° 50′	4° 40′	4° 15′
10.0	.....	4° 25′	5° 55′	4° 30′	4° 55′	5° 05′	4° 15′
10.5	.....	3° 40′	6° 25′	4° 45′	4° 45′	4° 50′	4° 45′
11.0	.....	6° 05′	6° 05′	5° 05′	5° 05′	5° 00′	4° 50′
11.5	.....	5° 00′	6° 15′	4° 40′	5° 50′	5° 20′	5° 05′
12.0	.....	5° 10′	7° 05′	5° 30′	6° 10′	5° 30′	5° 10′
12.5	.....	5° 35′	6° 00′	5° 35′	7° 20′	5° 30′	4° 55′

In each of the above experiments the thickness of the water film was measured each time that the slope of the table was measured, by means of a special gauge. (See §759.) When the film was broken into waves, both the crest and the trough of the waves were measured. In order to get average values, these measures were all plotted, each plot representing single rate of flow, and

average curves were drawn. (See Ore Dressing, page 707.) The complete set of average values is given in Table 108. For convenience the films were measured at a point where there were no ore grains, and hence the figures may be a little smaller than on a table that had ore on its entire surface. From the figures in Table 108 the average depth of the water has been calculated by assuming it to be the height of the trough plus one-third the added height of the crest.

The film is practically always broken into waves, and these have the effect of moving the ore faster than otherwise, the wave in fact acting for an instant like a thick film. The formation of waves varies with the quantity of water and the slope.

TABLE 108.—AVERAGE THICKNESS OF WATER FILMS ON SLIME TABLES, IN INCHES.

Slope of Table.	Pounds of Water per Minute Flowing over 1 Foot Width of Surface.													
	0.25		0.5		1		2		3		5		7	
	Crest.	Trough.	Crest.	Trough.	Crest.	Trough.	Crest.	Trough.	Crest.	Trough.	Crest.	Trough.	Crest.	Trough.
0° 15′	.....	0.100	.....	0.085	.....	0.070	.....	0.065	.....	0.067	.....	0.130	.....	0.150
1°	.....	0.018	.....	0.024	.....	0.030	.....	0.041	.....	0.048	.....	0.060	.....	0.067
2°	.....	0.014	.....	0.019	.....	0.024	.....	0.032	0.041	0.037	0.050	0.047	0.052	0.049
3°	.....	0.012	.....	0.018	.....	0.021	0.030	0.027	0.039	0.031	0.047	0.040	0.048	0.040
4°	.....	0.011	.....	0.017	0.021	0.020	0.031	0.024	0.039	0.029	0.047	0.035	0.047	0.035
5°	.....	0.010	.....	0.016	0.021	0.020	0.031	0.023	0.039	0.029	0.047	0.032	0.047	0.034
6°	.....	0.010	.....	0.015	0.022	0.019	0.032	0.023	0.040	0.028	0.047	0.029	0.047	0.033
7°	.....	0.010	.....	0.015	0.022	0.018	0.032	0.022	0.040	0.028	0.048	0.028	.....	.....
8°	.....	0.010	.....	0.014	0.022	0.017	0.032	0.022	0.041	0.028	.....	.....	.....	.....
9°	.....	0.010	.....	0.013	0.024	0.017	0.032	0.022	.....	.....	.....	.....	.....	.....
10°	.....	0.010	.....	0.012	0.024	0.016	0.032	0.021	.....	.....	.....	.....	.....	.....
11°	.....	0.010	0.013	0.012	0.025	0.015	0.032	0.021	.....	.....	.....	.....	.....	.....
12°	.....	0.009	0.013	0.011	0.025	0.014	.....	.....	.....	.....	.....	.....	.....	.....
13°	.....	0.009	0.013	0.010	0.026	0.013	.....	.....	.....	.....	.....	.....	.....	.....
14°	.....	0.009	0.014	0.010	.....	.....	.....	.....	.....	.....	.....	.....	.....	.....
15°	.....	0.009	0.015	0.009	.....	.....	.....	.....	.....	.....	.....	.....	.....	.....
16°	.....	0.009	0.016	0.009	.....	.....	.....	.....	.....	.....	.....	.....	.....	.....
17°	.....	0.009	0.016	0.008	.....	.....	.....	.....	.....	.....	.....	.....	.....	.....
18°	.....	.....	0.016	0.008	.....	.....	.....	.....	.....	.....	.....	.....	.....	.....
19°	.....	.....	0.017	0.007	.....	.....	.....	.....	.....	.....	.....	.....	.....	.....
20°	.....	.....	0.017	0.007	.....	.....	.....	.....	.....	.....	.....	.....	.....	.....

Slope of Table.	Pounds of Water per Minute Flowing over 1 Foot Width of Surface.												
	9		11		13		15		17		27	35	43
	Crest.	Trough.	Crest.	Trough.	Crest.	Trough.	Crest.	Trough.	Crest.	Trough.			
0° 15′	.....	0.150	.....	0.170	.....	0.195	.....	0.165	.....	0.200	0.200	0.219	0.262
1°	0.072	0.071	.....	0.076	.....	0.081	.....	0.084	.....	0.089	0.100	0.116	0.133
2°	0.056	0.053	0.058	0.056	.....	0.059	0.063	0.062	.....	0.062	0.078	0.089	0.101
3°	0.050	0.045	0.052	0.049	0.055	0.053	0.055	0.053	.....	0.054	0.067	0.076	0.084
4°	0.050	0.042	0.050	0.045	0.052	0.048	0.050	0.047	.....	0.050	0.060	0.066	0.075
5°	0.050	0.039	0.049	0.043	0.049	0.044	0.046	0.043	.....	0.047	0.054	0.061	0.069
6°	0.051	0.036	0.048	0.040	0.047	0.040	0.044	0.041	.....	0.045	0.051	0.058	.....
7°	.....	.....	0.047	0.037	0.045	0.038	0.043	0.040	.....	0.043	0.049	.....	.....
8°	.....	.....	0.046	0.034	0.044	0.036	.....	.....	0.043	0.042	.....	.....	.....

The average velocities of the currents obtained in the experiments have been computed, upon the assumption that the average thickness of the film is equal to that of the trough plus one-third of the difference between the trough and the crest, and are given in Table 109. These figures give average velocities, and do not show either the slow bottom current or the quick top current. They indicate that with 7½ pounds of water per minute flowing over each foot of table width, and with a slope of 1° 30′, the velocity would be 5 inches

per second, and that the same velocity would occur with 5½ pounds of water on a 3° 30′ slope; but the bottom velocities may be quite different in the two cases, because one of the films is 50% deeper than the other. Hence the two sets of conditions may suit quite different qualities of sand.

TABLE 109. — AVERAGE VELOCITY OF WATER CURRENT ON SLIME TABLES, IN INCHES PER SECOND.

Slope of Table.	Pounds of Water per Minute Flowing over 1 Foot Width of Surface.														
	0.25	0.5	1	2	3	5	7	9	11	13	15	17	27	35	43
0° 15′	0.1	0.23	0.55	1.17	1.72	1.48	1.79	2.31	2.50	2.56	3.50	3.27	5.19	6.16	6.31
1°	0.53	0.80	1.28	1.85	2.40	3.20	4.02	4.88	5.58	6.17	6.87	7.34	10.39	11.62	12.45
2°	0.69	1.01	1.60	2.37	3.03	4.00	5.38	6.41	7.55	8.45	9.30	10.51	13.30	15.15	16.35
3°	0.80	1.07	1.83	2.71	3.38	4.56	6.26	7.36	8.50	9.41	11.09	12.05	15.45	17.75	19.70
4°	0.87	1.13	1.92	2.91	3.59	4.92	6.90	7.70	9.03	10.18	12.01	13.05	17.30	20.50	22.10
5°	0.96	1.20	1.92	3.03	3.59	5.19	7.08	8.05	9.41	11.10	13.10	13.90	19.22	22.10	23.90
6°	0.96	1.28	1.92	3.03	3.59	5.49	7.27	8.45	9.87	11.85	13.70	14.50	20.30	23.25	.....
7°	0.96	1.28	2.03	3.03	3.59	5.65	.....	.....	10.59	12.48	14.05	15.20	21.20	.....	.....
8°	0.96	1.37	2.03	3.03	3.59	.....	.....	.....	11.15	13.15	.....	15.55	.....	.....	.....
9°	0.96	1.48	2.03	3.03	.....	.....	.....	.....	.....	.....	.....	.....	.....	.....	.....
10°	0.96	1.60	2.14	3.17	.....	.....	.....	.....	.....	.....	.....	.....	.....	.....	.....
11°	0.96	1.60	2.14	3.17	.....	.....	.....	.....	.....	.....	.....	.....	.....	.....	.....
12°	1.07	1.60	2.27	.....	.....	.....	.....	.....	.....	.....	.....	.....	.....	.....	.....
13°	1.07	1.74	2.27	.....	.....	.....	.....	.....	.....	.....	.....	.....	.....	.....	.....
14°	1.07	1.74	.....	.....	.....	.....	.....	.....	.....	.....	.....	.....	.....	.....	.....
15°	1.07	1.74	.....	.....	.....	.....	.....	.....	.....	.....	.....	.....	.....	.....	.....
16°	1.07	1.74	.....	.....	.....	.....	.....	.....	.....	.....	.....	.....	.....	.....	.....
17°	1.07	1.92	.....	.....	.....	.....	.....	.....	.....	.....	.....	.....	.....	.....	.....
18°	.....	1.92	.....	.....	.....	.....	.....	.....	.....	.....	.....	.....	.....	.....	.....
19°	.....	1.92	.....	.....	.....	.....	.....	.....	.....	.....	.....	.....	.....	.....	.....
20°	.....	1.92	.....	.....	.....	.....	.....	.....	.....	.....	.....	.....	.....	.....	.....

§ 522. DISCUSSION OF THE EXPERIMENTAL RESULTS. — By plotting the figures contained in Tables 106 and 107 (see Ore Dressing, page 707) and studying these curves it is found that the galena curves have a peculiar sag in them between 5 and 10 pounds of water. The wave curves, which may be plotted from the information contained in Table 108, appear to account for this sag in the galena curves, as the former have a sag which corresponds to that in the galena curves, showing that the waves serve to start the galena moving at lower angles than it would move without them. The only exception is the curve of galena for grains which rise in 1.25-mm. current. In this the quartz and galena are washed off together at very low angles when the water is more than 4 pounds.

§ 523. *The Choice of Slope for a Table.* — If the quartz finish angle is assumed to be the right one for tables, then it is clear that the wider the space between the quartz and galena curves the better will the separation be. This indicates better treatment with less than 5 pounds of water or with more than 10 pounds than between the two. The latter field, however, is not so much behind the other two in its work as the curves might imply, because the galena is practically not moving at all when the quartz is nearly all rolling. If, on the other hand, the finish angle of galena be chosen as the right one for tables, then the discrepancies between the three fields, namely, below 5 pounds, between 5 pounds and 10 pounds, and above 10 pounds, would probably disappear altogether, for whatever effect the waves had in hurrying the galena off the table with 5 to 10 pounds of water would hurry off the quartz still faster. If the quartz angle be chosen, the quartz will move away leaving the galena stationary. The act is like that of a boat sailing away from her moorings. The separation is made by the departure of the quartz from company with galena. If the galena angle is used, a race is initiated in which the quartz beats. The two catch words "departure" and "race" seem to express the difference in the principle between the two methods. The capacity of a

table with the quartz angle will be much less than with the galena angle, as the particles will move down the slope much more slowly; and the concentrates are apt to be less clean, because the solid bank of galena tends to entangle grains of quartz except with large quantities of water.

The following table, compiled from Tables 106 and 107, shows a suggested grouping of sand and slime sorts that are probably suitable for separating chalcopyrite (specific gravity 4) or sphalerite (specific gravity 4) from quartz (specific gravity 2.6). When galena (specific gravity 7.5) is to be separated from quartz, probably two groups, 32–1.25 and 1.25–0 mm. per second settling velocity, will be all that are needed, instead of the last three shown in the table.

SUGGESTED CLASSIFICATION OF SLIMES FOR SLIME TABLES.

	Diameter of Grains.	Currents in which Grains Settle.	Pounds of Water per Minute per Foot of Width.					
			1½	2	4	5	6	12
	Mm.	Mm. per Second.	Slopes at which all Grains Roll.					
Quartz	0.25 –0.589	32–70	4° 20′	3° 50′	2° 50′	2° 55′	3° 05′	2° 45′
Galena	0.119 –0.199		9° 55′	9° 00′	6° 10′	5° 05′	4° 15′	6° 10′
Quartz	0.0911–0.25	9–32	4° 20′	3° 50′	2° 50′	2° 50′	3° 05′	1° 35′
Galena	0.047 –0.119		7° 20′	7° 10′	4° 45′	4° 15′	4° 00′	6° 10′
Quartz	0.0335–0.0911	1.25–9	3° 15′	3° 00′	2° 40′	2° 25′	2° 20′	1° 50′
Galena	0.0198–0.047		8° 15′	10° 50′	5° 00′	6° 05′	5° 10′	7° 05′
Quartz	0–0.0335	0–1.25	2° 30′	2° 40′	.....	0° 50′	.....	.....
Galena	0–0.0198		13° 20′	7° 50′	.....	0° 50′	.....	.....

Comparing the above figures of slime sorts with those used in the mills, we find that the mills treat together all the ore that will rise in a current of 25 or 30 mm. a second, and they do this with chalcopyrite as well as with galena. Comparing the figures in regard to slope, we find that in the mills the galena finish angle, or an angle a little steeper, is the one which has been empirically settled upon. We do not find in the mills, however, the chief law which seems to be established by these tests, namely, that with coarse sand sorts we need gentle slope and much water, while with fine sand sorts we need steep slope and little water. The experiments suggested the following as probably the best slopes and water quantities:

	Slope.	Water Quantity per Foot of Circumference.
For coarse pulp, 32–70 mm. settling velocity	2° 45′	12 pounds.
For medium pulp, 1.25–32 mm. settling velocity	5° to 6°	5 to 6 pounds.
For finest pulp, 0–1.25 mm. settling velocity	8° to 10°	2 pounds.

The coarse sand sort (32–70 mm. settling velocity) is put in the table because of preliminary experiments which the author believes show that such a sand sort may in some cases be advantageously treated upon a slime table. His tests indicate that with 12 pounds of water or more, the speed with which these coarse grains move is so great that the quartz finish angle is the one best suited for their treatment. This might be used for phosphates, pyrite, or any mineral of not too high value which had to be treated in large quantities where water was abundant or could be cheaply pumped.

It will be noted that the experiments were made upon a rectangular plane table, while the mills employ convex conical tables; and it may be said that on the rectangular table there is not the change in depth and velocity of water that occurs in passing from the center to the circumference of a conical table. This change, however, is very slight, for a distance of one or two feet next to the circumference; and if the water is adjusted for this portion of the table the conditions will be nearly the same on a convex as on a plane table.

SHAKING OR BUMPING TABLES.

§ 524. ROTARY PERCUSSION TABLE. — This machine is a new round table about 15 feet in diameter. While the feed and wash water arrangements, together with the product receiving troughs, revolve slowly around the table, the table itself is rotated forward from 0.2 to 0.3 inch against a compressed spring by means of a cam disc, and then brought suddenly back by means of the spring against stops. In this way the table gets about 160 horizontal, circumferential shocks per minute. Otherwise the table is like those discussed in § 504. It handles from 10 to 18 tons per 24 hours and requires about 0.5 horse-power.

§ 525. VANNERS. — Smooth rubber belt vanners, both end and side shaking, are frequently applied very successfully to the concentration of the coarser slimes. The student is referred for the description of these machines and their method of operation to the previous chapter.

§ 526. END-SHAKE BELT SLIMER. — This machine has recently come onto the market and no data as to its capacity or durability are available. As shown in Fig. 229, it is an adaptation of the vanner principle and has a

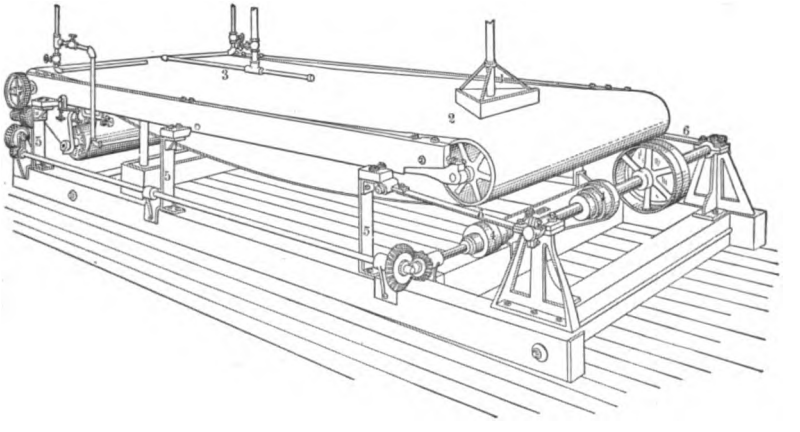

FIG. 229. — END-SHAKE BELT SLIMER.

canvas belt mounted on a shaking frame to which endwise or longitudinal reciprocations are imparted. At the feed end of the belt is a triangular feed box (1) which makes a triangular depression (2) in the surface of the canvas across nearly its whole width. The apex of this triangular depression is a little less than halfway from the feed end roller to the discharge end roller. Beneath the belt are suitable frame pieces of wood covered with linoleum over which the canvas slides to maintain the lines of this depression; and to maintain also a line extending from the apex to the discharge roller, which is slightly elevated so that the wash water and slimes wash off the belt into launders at the sides. The belt runs over drums which are regulated as in a vanner. The feed, when it is introduced into the depression in the belt, enters a quiet pool of water maintained by the triangular depression. This allows the concentrates to settle. As the belt moves on it comes into the region where it is acted upon by the wash water supplied from a pipe (3) along the ridge or elevated medial line. In this way the tailings are washed into launders at the sides, while the concentrates, adhering to the belt, are carried over the discharge end roller and washed off into a concentrates tank beneath the table.

Adjustments by means of step pulleys (4) are provided for varying the speed of travel of the belt, which should be from 26 to 56 inches per minute. The shaking frame is supported by means of hickory toggle springs (5) and moved by means of eccentrics (6). The floor space required is about 7 × 16 feet.

§ 527. SIDE-SHAKE BELT SLIMER. — This concentrator is also similar to the vanner, as is shown in Fig. 230. It consists of a canvas belt, having a

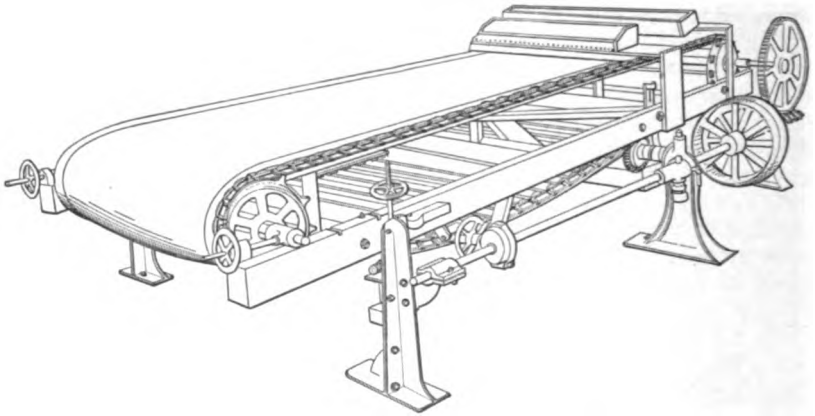

FIG. 230. — SIDE-SHAKE BELT SLIMER.

continuous rotary motion lengthwise of the machine, which is attached at either side to sprocket chains running over sprocket wheels and is stretched so that it remains smooth whether at rest or in motion, wet or dry, and also under a speed of 6 feet per minute with 200 side reciprocations per minute, which are the conditions under which it is run. The slimer seems to be of simple and durable construction. It weighs 1,400 pounds, has a large capacity, and requires 0.25 horse-power.

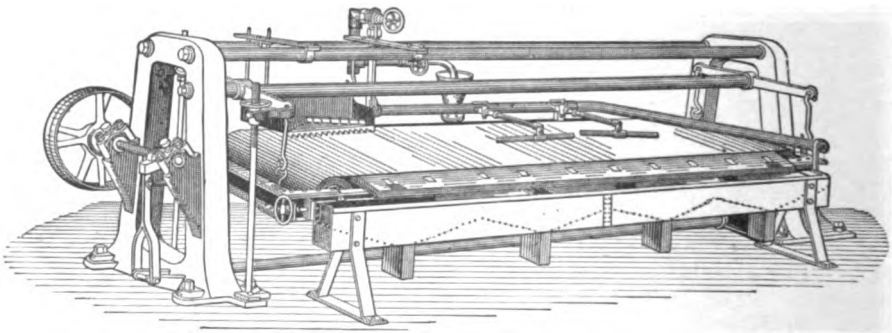

FIG. 231. — BELT PERCUSSION TABLE.

§ 528. BELT PERCUSSION TABLES. — These concentrators have endless rubber or canvas traveling belts, which may be horizontal or inclined in length, but always sloping in width, carried on shaking frames, with fixed frames to carry the driving mechanism. The side slope is always adjustable and the lengthwise slope may or may not be. One of these tables is shown in Fig. 231, which has an iron fixed frame set on wooden sills, carrying a shaft, a pulley, and a three-armed cam at one end, while at the other there is a spring and

bumping post. The cam draws the table toward it, and at the release the spring pulls it back against the bumping post. The travel of the belt is either intermittent, given by a rachet and pawl, or continuous by a vertical belt working on a grooved pulley on the roller at the head end. The shaking frame is suspended by four rods from four arms upon a rocker shaft. By tilting this shaft the table may be given any desired slope. The belt, which is 30 to 65 inches wide, is stretched between two end rollers 8 to 10 feet from center to center. The upper part of the belt may be supported by a plane wooden surface with diagonal grooves which are supplied with water for lubrication or by a number of small rollers. The return part is carried by the three large rollers. Some types use a flange on the upper edge of the belt, which permits feeding closer to the edge, and so extend the working surface. The belts have little blocks on their edges, which drop into little sockets on the driving roller and serve for draught and guiding.

Since the greatest dimension of these tables is in the same direction as the bump, the minerals are allowed to spread out into a perfect fan shape, and so prevents the banking of the sand and the cutting action of the water.

These tables should be fed with sorted products from classifiers, and when so fed they do clean work, not only in two-mineral separation, but also in three or four-mineral separation. The pulp is fed upon the upper rear corner of the belt, and the agitation separates the different minerals into layers. Wash water is applied from spray pipes. The travel of the belt, assisted somewhat by the bump of the table, carries the ore forward; while the water, flowing down the slope transversely, washes the light minerals rapidly toward the lower edge, the heavy minerals more slowly. Better results are obtained when the wash water is applied from a diagonal spray pipe, keeping near the upper edge of the ore, than when it is applied along the upper edge of the belt. The products are received in a launder with four compartments each having a spigot for continuous discharge. The following figures on adjustments are quoted:

Belt Travel per Minute.	Vibrations per Minute.	Length of Throw, Inches.
13 feet 9 inches to 15 feet 9 inches	150 to 180	0.6 to 1.1
13 feet 9 inches	150	
10 feet 10 inches	200	

The slope is about 5° for the coarser products, this slope being regulated by the appearance of the products. The capacity for the ordinary size of table appears to be about 3 to 6 tons in 24 hours. Tables of small capacity use 3.7 gallons of water per minute in the feed, 13.7 gallons for washing and blow-off jets, and 2.1 gallons for lubrication under the belt. For operating they require about one-half horse-power.

§ 529. COMPARISON OF VANNERS WITH CONVEX SLIME TABLES. — A vanner 4 feet wide, 12 feet long, costs $500 more or less; an 18-foot table costs $200 to $300 according to locality. Two-deck or three-deck tables cost somewhat less than twice or thrice that sum. Vanners treat pulp carrying from 12 to 38% (average perhaps 20%) of solid matter, the finer the product the less the quantity; tables treat pulp carrying 5 to 15% (perhaps average 10%) of solid matter, the finer the product the less the quantity. Four-foot vanners treat 4 to 6 tons per 24 hours; over 6 tons is probably an overload; 18-foot tables treat perhaps 6 to 15 tons per 24 hours, according to fineness. As to the percentage of sulphides: in the gravity stamp mills, the author finds the feed to 4-foot vanners ranging from 1 to 5%, with an average of about 2½%,

and the feed to 6-foot vanners ranging from 6 to 20%, with an average of about 11%. In mills using rolls the 4-foot vanner will probably come nearer the second figure than the first. The tables receive pulp carrying perhaps ¼ to 3% of valuable mineral, averaging perhaps 1½%. The higher the percentage of concentrates the less is the capacity of any concentrator. We may say, then, that judging from practice, slime tables are adapted for treating large quantities of thin pulp with a small percentage of concentrates; while vanners are adapted for treating smaller quantities of thicker pulp, which carry a higher percentage of concentrates.

The maximum size of the grains fed to tables is much finer than for vanners; and the former must receive classified products or they will fail, while the latter do good work on unclassified products. Vanners probably would do better work on classified than upon unclassified pulp, but in gravity stamp mills difficulties generally occur in adapting classifiers to the irregular working of the stamps, and this prevents their adoption.

The power required for a vanner is perhaps 0.5 horse-power; that for a table is very little, perhaps 0.1 horse-power.

§ 530. SIDE-BUMP TABLES WITH PLANE SURFACES. — THE RITTINGER TABLE was the first of this class. It uses a cam, spring, and bumping post to convey the heavy layer of concentrates to one side; and a film of water flowing at right angles to the direction of the bump to convey the light layer of waste down the slope to the proper place. The table is 8 feet long by 4 feet wide, and is generally mounted in pairs, with a dividing partition. It has been found that a table only 5 feet long does equally good work and is much lighter. The table is suspended upon four rods, and the slope is regulated either by chains at the upper ends of these rods, winding upon drums, or by elevating nuts. The slope recommended by Rittinger varies from 6° for the coarsest to 3° for the finest slimes.

The feed pulp, which must be a classified product, is distributed upon one corner of the head of the table, over a width of 8 to 12 inches, and the agitation immediately separates the heavy and light minerals into layers. The bumping action is produced by a cam, which pushes the table toward one side, a spring which forces it back, and a bumping post, which stops it suddenly on its return. In order to prevent the shock, due to the bump, from being transmitted to the mill frame, two tables can be arranged to strike simultaneously against opposite sides of a bumping post placed between them, or by allowing the tables to strike against each other on the return stroke. This action causes the ore particles to move across the table by jerks, while the wash water, which is fed over the remainder of the head, causes them at the same time to move down the slope, the light ones more rapidly than the heavy. The combination of these two actions yields the mineral particles spread out like a fan, with the heaviest mineral pushed farthest across the table, the middle weight mineral next, and the lightest least. By properly placing dividing fingers at the foot of the table, each of these products may be guided into its own box. Endwise motion of the table is prevented by guides.

The action of the table is seriously interfered with by the bank of quartz sand which turns the current of wash water so that the film is not of the same thickness all over the table, as the theory seems to demand that it should be. Instead, it is harmfully concentrated into a stream of considerable cutting power along the line where the best separation should take place. This cutting stream impairs the action of the machine and prevents it from making as clean tailings as one would expect. Improved results (both qualitative and quantitative) have been obtained by applying the wash water from a diagonal spray pipe instead of from a box at the head.

For the coarsest slime a wooden table makes 120 bumps a minute; for finer material 150, and for the finest 180 to 240. The length of throw is from 1½ inches for the coarsest, down to ½ or ¾ inch for the finest. The capacity varies from 155 pounds (dry weight) of coarser to 55 pounds of fine slimes per hour, the corresponding amount of water with the pulp varying from 1.6 gallons to 0.8 or 0.9 gallon a minute, and the amount of wash water from 5.28 to 3.17 gallons a minute.

Various materials have been used for the table surface — wood, iron, zinc, glass, marble, slate, cement, and rubber. With wood, some care has to be used to keep the surface smooth, but on the whole this has been found the most satisfactory, though a covering of rubber has in some cases been found an improvement. It should be noted that, unless the rubber is fairly thick, it is hard to keep smooth. Marble and glass are very liable to breakage, especially the former. In one case marble was found inferior to iron, because the surface was too smooth. Iron makes the table very heavy, and so increases the power used.

§ 531. The smooth Wilfley, lately adopted in certain mills, has an advantage over the Rittinger, in the great lateral extension and in the gentler vanning motion. It must, however, be fed with classified products. These smooth tables are not much used in modern mills, having been given up almost entirely to be used as fine-sand concentrators with riffled tops; and for treating slimes it seems that the use of riffles only results in keeping the slimes in a constant state of agitation, while a stratifying basin with a surface of linoleum settles and catches particles which may then be removed by riffles as guides.

§ 532. WILFLEY SLIMER. — *Principle of Operation.* By means of the vibratory motion of a canvas deck the fine, heavy, mineral particles are forced down through the lighter gangue particles. The heavy particles thus layered are caught by the interstices of the canvas, while the gangue is washed off with the wash water. The machine consists of a sub-frame, head motion, shaking frame, and a set of trays with canvas surfaces.

§ 533. *Sub-frame.* — The slimer rests on a sub-frame similar to that used for the Wilfley table. It consists of a longitudinal timber supported at each end by a transverse foot piece. The different members of this sub-frame are held together by means of bolts. On one end of the longitudinal timber is placed the head motion which is directly connected with the table.

§ 534. *Head Motion.* — The head motion of the Wilfley slimer is a simple toggle and pitman movement exactly like that used on the Wilfley table. (See § 436.)

§ 535. *Shaking Frame.* — Connected to the head motion is the shaking frame Fig. 232. This consists of a skeleton framework thoroughly braced so as to minimize vibration. It is supported at each corner on a cast-iron rocker (1) resting on long bearing feet (2), the latter being securely bolted to the sub-frame. In each foot is a set screw (3) bearing on the lower face of the rocker bearing. These adjusting screws give the different slopes to the table. Running transversely with the sub-frame, and equally spaced from each other, are three link belts. Sprocket wheels (5) at each end, actuated by a shaft (8) driven from the main drive by reducing gear (6) and worm (7), move the set of trays.

§ 536. *Trays.* — Placed on the link belts are the decks or trays (9) (Fig. 232). These trays move slowly across the frame. The bottoms of the trays are covered with canvas painted with a special preparation. They are arranged side by side parallel with the line of motion of the table.

§ 537. *Operation.* — When working, the pulp is generally fed to five trays which yield tailings over the lower ends. The remaining trays, on top

of the shaking frame, receive wash water and deliver middlings from the lower ends. The trays, when charged with concentrates, pass over the side and return beneath, where the concentrates are removed by oscillating sprays of water.

This slimer cannot save coarse concentrates. This being the case it should never be called upon to treat a natural feed or mixed pulp, unless the latter is very fine, and even then better work can be done by first feeding the pulp to a vanner or table and re-treating the resulting tailings on the Wilfley slimer. The vanners and tables lose the very fine concentrates in the tailings which this slimer was designed to recover.

The jerking motion of the mechanism usually pushes the pulp on the trays down the slope towards the tailings end. In certain cases the progressive motion has been up the slope and a "neutral bump" has also been tried. As stated above, the feed to the slimer should be tailings from some other concentrator. When this kind of feed is supplied the head motion is so arranged that the jerking motion pushes the pulp down the slope. If a natural feed were sent to this table with progressive motion down the slope, it would be found that the loss in the tailings would be very high, owing to the fact that all the large particles of heavy mineral, instead of being saved on the canvas, were washed down with the tailings.

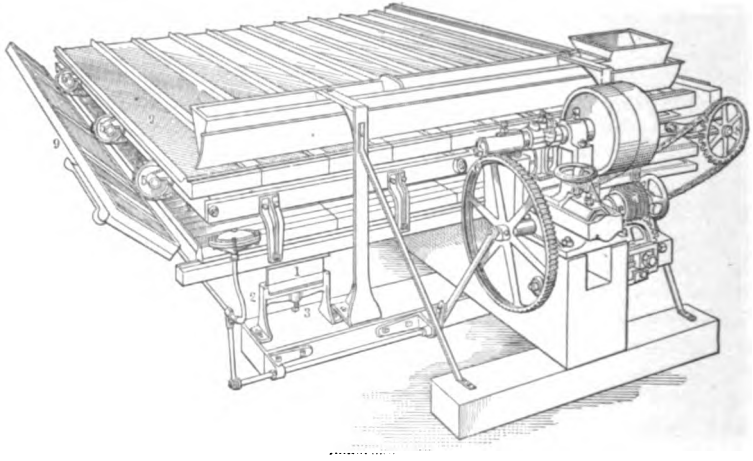

FIG. 232. — THE WILFLEY SLIMER.

When a natural feed is sent to the slimer before previous treatment on other concentrators, the progressive motion is then made toward the upper end. This motion has also been used when the tables have been found to give unsatisfactory results with the regular down-slope treatment. Although the coarse concentrates are saved with a progression toward the upper end, the increased amount of water needed for washing off the tailings is found to carry off the very fine concentrates. It is therefore poor policy to feed any but the proper feed to the slimer. The mechanism should be swung through 180° and adapted for either coarse or fine sands up or down the slope. The two cannot be treated together.

The slimer makes 180 reciprocations per minute, treats from 10 to 20 tons per 24 hours, and requires from 5 to 10 gallons of water per minute. It requires 1 horse-power to run it. The weight is 3,400 pounds. There are 20 trays and they make one complete circuit in 45 minutes. The slope is 2 inches in 12 feet.

§ 538. THE RIFFLED SLIMER shown in Fig. 233 is a side-shake table operating similarly to the Wilfley table (see § 434), and designed for handling large quantities of very fine material. The deck is made long and is divided into four working sections, namely, a longitudinal, settling section, a stratifying section, and two finishing sections. The settling section is a smooth linoleum surface 3 feet wide and 18 feet long; the stratifying section is a basin located at the rear end of the settling section and 0.625 inch deep by 7 feet long, gradually increasing in width and depth towards the rear end of said basin.

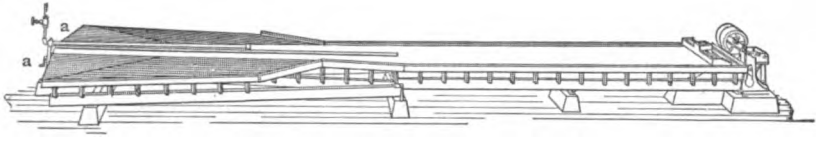

FIG. 233. — THE RIFFLED SLIMER.

The bottom of the basin is provided with centrally diverging riffles 0.25 inch deep and 2 inches apart, while the finishing sections, which are hinged to the opposite sides of the stratifying section, are riffled and can both be transversely adjusted by one adjusting screw. When in practical operation, the driving pulley should rotate about 250 revolutions per minute, and the length of the stroke should be 0.56 inch to 0.62 inch according to the class of material being treated. The pulp is delivered into the feed distributor, by which it is equally distributed transversely across the head end of the settling section. The material then flows in a longitudinal direction until it reaches the stratifying section or basin. At this point the slimy water, which has been settled so that it is practically clear on the surface, is equally divided by a partition in the basin, and discharged transversely across the surface of the two finishing sections. The solids, retained in the deep basin, are gradually forced rearward by the reciprocating motion of the table and, at the same time, the particles containing the greater specific gravity are shifted to the center of the basin by the diverging riffles.

By this method of operation the mineral values are consolidated and stratified while in a deep basin, practically free from any currents of water; and as the material travels up the inclined end of the stratifying basin, it gradually spreads out on the finishing surface and is washed by the dressing water in the usual manner with but small loss of the fine values. The mineral follows out the line of the riffles and is discharged at *a*, *a* as concentrates, while the gangue is caused to flow transversely across the riffles and is discharged over the side of the table. The slimer has a capacity of about one ton per hour and requires from 3 to 6 gallons of wash water per minute.

§ 539. WILFLEY TABLE AS A SLIMER. — One feature of the Wilfley table to which especial attention should be called is its ability to separate sands from slimes while making the ordinary concentration. This separation is more complete and thorough than can be made by any classifier and should be taken advantage of in designing mills. By making this provision one can treat the slimes on slime vanners, and the sands on sand vanners, and thus bring each up to the greatest pitch of perfection that can be hoped for. If, on the other hand, as is often done, mixed sands and slimes are sent together to the vanners, the adjustment of the vanners is greatly hampered. In this case the millman does one of three things: he may adjust to save the coarser values at the sacrifice of the finer, he may adjust for slimes at the cost of the sands, or he may try to strike a compromise between the two. None of these

three schemes works to the same degree of advantage as is obtained by the separate treatment above indicated.

§ 540. DEPTH OF BED. — In concentrators of all forms the depth of bed seems to be of great importance. If too thick, good work is impossible; if too thin the capacity may be cut down. The thickness of the bed may be defined by the number of grains of maximum diameter, one above another, that would be equal to the thickness of the bed. On this basis a bed is spoken of as so many grains thick or deep. The slime and fine-sand concentrators described in this and the previous chapter may be rated as follows: On vanners the bed may be 10 grains deep without complicating the work too much; on bumping tables the author believes the bed should be, if anything, slightly less deep than on vanners; on film-sizing tables the grains must receive individual treatment, and therefore the bed ought to be only one grain deep; in riffles the bed may be several hundred grains deep and still good work result; and in kieves the bed may be several thousand grains deep and still yield good results.

CHAPTER XIV.

MISCELLANEOUS PROCESSES OF SEPARATION.

§ 541. This chapter contains descriptions of a number of methods of ore separation which have, until within a comparatively few years, been considered more as laboratory methods than as commercial possibilities. The rapid advance in the art of ore dressing has, however, placed them on a practical basis, and most of them have found application in commercially handling ores on a large and satisfactory scale. The following methods of separation are treated in this chapter:

Magnetic Separation.
Roasting for Magnetism.
Electrostatic Separation.
Pneumatic Separation.
Flotation or Adhesion.
Disintegrating and Screening.
Decrepitation and Screening.
Roasting for Porosity.
Centrifugal Separation.
Weathering.

Magnetic Separation and Concentration.

§ 542. When Applicable. — Magnetic separation found its first practical application almost entirely in the separation of strongly magnetic iron ores, such as magnetite, from gangue or some other mineral less magnetic. As the art advanced the design of magnetic separators with very strong poles resulted in their adaptation to the separation of ores, containing iron or manganese which are only weakly magnetic. Hematite, limonite, and siderite can be separated from their gangue in this way. The separation of sphalerite (resin jack) from pyrite, or other iron ores, which can be only imperfectly done in the wet way, is readily effected magnetically after a preliminary roasting to convert the iron ore into a magnetic sulphide or oxide.

In regard to the direct separation of minerals other than iron ores, many which lie so near one another in specific gravity as to preclude a separation in the wet way may find their solution in this method. Among these separations are (1) sphalerite (black jack) from pyrite, (2) sphalerite (black jack) from rhodonite and garnet, (3) rhodonite from garnet, (4) franklinite, fowlerite, garnet, tephroite, and other silicate of manganese minerals from one another and from zincite, willemite, and calcite, (5) separation of tin-tungsten concentrates, (6) separation of chalcopyrite-sphalerite-siderite concentrates, (7) rutile from apatite, (8) rutile, garnet, and monazite from one another, (9) garnet from garnetiferous rock and schists, (10) garnet and other injurious iron minerals from corundum, (11) siderite from cryolite, (12) emery from gangue, (13) biotite from gangue, (14) hornblende from valuable minerals, (15) leucite from lava, and (16) chromite from other heavy minerals. Where the two minerals to be separated lie very close to one another in their magnetic properties, they must be very closely sized before treating, but sizing is not usually necessary, and very often questionable advantage is gained from it in this process. As in all other processes it is necessary for success that the crushing shall be fine enough to set free all the values.

The magnetic separator has been developed into an efficient machine, economical of power, of staunch construction and easy adjustment. It can be operated by any one of ordinary intelligence and is not a source of large expense and repair bills.

Where applicable this process enjoys all the advantages held by other methods of separation and, in addition, may be independent of gravity.

§ 543. ELECTROMAGNETS. — Steel bars may be magnetized and retain more or less magnetism indefinitely. Bars of soft wrought iron, of soft steel, or of cast iron may be magnetized by electric currents in surrounding coils of insulated copper wire. These iron bars form electromagnets as long as the current flows, and, on account of their greater strength and certainty, are preferred to the relatively weak and uncertain permanent steel magnets for practically all magnetic machines.

All magnets have north and south poles and would, if suspended, line themselves up with the compass or magnetic meridian of the earth. The poles of an electromagnet may be reversed by simply reversing the direction of flow of the electric current. The magnetism, or magnetic field, can be obtained of different intensities ranging from indefinitely weak to a certain maximum of strength. For application to the purposes of separation of ores, it is necessary to be able to control the intensity of the field for any specific separation. Thus magnetite, a strongly attracted substance, may be separated from apatite by a comparatively weak magnet, while the separation of franklinite from willemite and calamine requires a magnetic field of high intensity, and a higher still to separate red garnet, a very weakly magnetic substance, from corundum. The intensity of the magnetic field depends on the size of the magnet, the form of it, the distance between the body to be attracted and the magnet, and the number of ampere-turns in the magnet coil, that is, the product of the amperes of current flowing in the coil times the number of turns around the core.

The unit of magnetic field used by electricians is represented by one magnetic line of force per square centimeter. We have one line of force or a unit field whenever over one square centimeter there is a pull of one dyne (1.019368 mg.) upon a magnetic pole placed in it. The conception of lines of force expresses direction as well as quantity. A unit pole is defined as a pole which gives 1 dyne pull upon a similar pole of opposite polarity placed at 1 centimeter distance from it. To get a practical understanding of the lines of force we may employ Maxwell's law that magnetic attraction varies as the square of the number of lines of force or P (dynes) $= \frac{B^2 A}{8\pi}$, where P represents the attraction or pull in dynes, B represents the intensity of field or number of lines per square centimeter, and A represents the area of the field. Reversing this formula, we get $B = \sqrt{\frac{8\pi P}{A}}$.

The magnetic lines existing around magnets are well illustrated by Figs. 234, 235, and 236. These three figures show a varying amount of dispersion or scattering of the lines of force. Fig. 234 shows the most dispersion and Fig. 236 shows the greatest concentration.

Magnetic lines of force are analogous to electric currents. They both form closed circuits. Corresponding to the strength of the electric current there is the number of magnetic lines of force produced; to the resistance of the electrical circuit corresponds the reluctance, as it is called, which opposes the magnetic lines of force; and finally, in place of the electromotive force which tends to cause electrical currents, there is the magnetomotive force which tends to produce magnetic lines of force. Just as the strength of electrical

current $= \frac{\text{electromotive force}}{\text{resistance of electrical circuit}}$ so also the number of magnetic lines of force $= \frac{\text{magnetomotive force}}{\text{reluctance of the magnetic circuit}}$. The magnetomotive force in a magnetic circuit is directly proportional to the number of ampere-turns; the reluctance is directly proportional to the length of the circuit and inversely proportional to the sectional area, and, likewise, to the permeability of the substances in the circuit.

By the term permeability, commonly denoted by μ, is meant a numerical coefficient which expresses how much greater the number of lines generated in a substance by a given magnetomotive force is than those which would be generated in air by the same force. For example, a magnetomotive force which will produce H magnetic lines per square centimeter in air will produce B magnetic lines per square centimeter in a piece of soft, annealed iron. The ratio $\frac{B}{H}$ is μ. The permeability of air and all the non-magnetic materials is practically 1; that of magnetic substances is greater than 1. The value of H is generally used as a measure of the magnetomotive force. The permeability of iron is of special interest as it varies with the magnetomotive force and with the

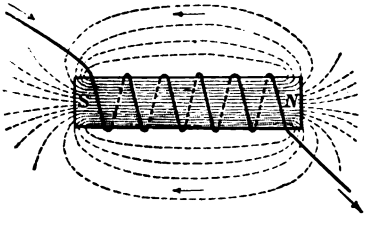

FIG. 234.

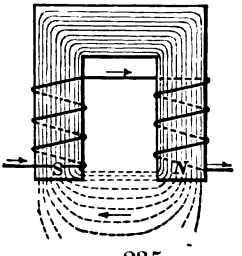

FIG. 235.

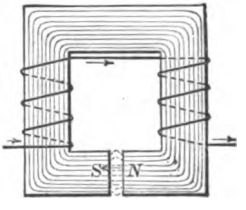

FIG. 236.

kind of iron. It has been found that iron does not give a proportional increase in B for an increase in H, and consequently the permeability decreases. It is not possible to get a value of B in soft, annealed iron much above 20,000 without using an enormous magnetomotive force, and this point is, therefore, called the point of saturation of the iron. In designing electro-magnets it is generally not good economy to let B go above 16,000 for wrought iron, or above 6,000 for cast iron.

§ 544. It is possible to express the number of lines of force in a magnetic circuit by a formula. Let S denote the number of turns in the coil; let i denote the strength of the current, that is, the number of amperes; let l be the length of the circuit in centimeters, and A the area of its cross-section in square centimeters; let μ denote the permeability as before, and let N be the total number of magnetic lines flowing through the circuit, or, as it is frequently called, the magnetic flux.

Then magnetomotive force $= \frac{4\pi Si}{10} = 1.257\, Si.$

Magnetic reluctance $= \Sigma \frac{1}{A\mu}.$

Magnetic flux, $N = \frac{\frac{4\pi Si}{10}}{\Sigma \frac{1}{A\mu}}.$

The symbol Σ is to indicate a summation where different parts of the magnetic circuit are not all of the same size and material. In that case the reluctance of each part must be calculated separately and all finally added together. The last formula shows how to calculate the strength of field of a magnet already constructed.

§ 545. ACTION OF SUBSTANCES IN A MAGNETIC FIELD. — All substances are either attracted or repelled by magnets. The former, which are comparatively few in number, are called paramagnetic, and the latter, which are more numerous, diamagnetic. The paramagnetic substances are the metals iron, nickel, cobalt, manganese, chromium, cerium, titanium, palladium, platinum, osmium, and many of their salts and compounds. The degree of attraction of these substances varies widely. The metals iron, nickel, and cobalt, and the minerals magnetite and pyrrhotite, are quite strongly attracted, while the other paramagnetic substances are attracted only feebly, and there is a wide gap between them and the strongly attracted substances.

To illustrate the difference between strong and weak magnetic substances, Delesse says that if steel be taken at 100,000, then the attractability of magnetite is 65,000, of siderite 120, of hematite 93 to 43, and of limonite 72 to 43. The last three substances are so low that they have been considered non-magnetic, since no attraction was shown except in the very strong fields of recently constructed magnetic separators. However, by using a magnetic separator designed to give a very strong field and at the same time a field which is capable of fine adjustment, it is possible not only to separate these as well as many other weak paramagnetics from diamagnetics, but also to separate one from another even though the difference in attractability is slight. The permeability of the diamagnetics is so nearly unity that the phenomenon of magnetic repulsion is not a familiar one. The permeability of the same mineral from different localities varies tremendously. Even in the same ore body, six months' operations have been known to open up ore with such a different permeability that a former successful magnetic method was rendered worthless. Another instance of the variable magnetic behavior of minerals is the discovery of magnetic galena at Gem, Idaho.

§ 546. PREPARATION, DUST, DRYING, CURRENT, AND COSTS. — If the crushing and screening is performed on dry ore great care must be exercised to prevent the too free circulation of dust about the plant, as an arsenic or lead-bearing ore — even fine quartz itself — makes a dust that is exceedingly injurious to the health of the workmen. All the dusty places should be housed in and the dust removed by exhaust fans or otherwise. The men should constantly wear respirators and be transferred every few days from a dusty place to one that is healthful. In drying the ore either before crushing and screening, or when handling a product from a wet process, care must be exercised that it is not heated so hot that it roasts, as this may result in a failure of the operation, the wrong mineral becoming strongly magnetic. A direct current is always used to excite an electromagnet. An alternating current may be readily transformed into a direct current by running a direct-current generator direct connected to an alternating-current motor. So far as the author is aware an alternating current has never been successfully applied to effect a magnetic separation. The cost of magnetic separation consists of the cost of preparing the ore for treatment plus a few cents per ton for supervision, excitation, and repairs. With a good-sized plant the actual cost of magnetic separation alone, not including the preparation, should not exceed 15 to 25 cents per ton. Roasting the ore should not increase this by more than 10 to 50 cents, while crushing, screening, and conveying to the roasting plant should not exceed 50 to 75 cents per ton. Under exceptionally favorable conditions the costs may be even lower than those here given.

§ 547. CLASSIFICATION OF MAGNETIC SEPARATORS. — Magnetic separation may be divided into two parts: (1) the attraction of magnetic particles by the magnet, (2) the removal or conveying of the magnetic material away from the non-magnetic, or vice versa, after the former has been attracted.

Magnetic separators may be classified as follows:

I. Separators having the magnetic poles which bring about the separation energized directly by the coils of the magnet. These are termed "Primary-Magnet Type."

II. Separators in which the magnetic poles, effecting the separation, are secondary or induced poles. These are energized by the primary poles in the magnetic field of which they lie, and are called "Secondary or Induction-Magnet Type."

Other points of difference in machines are in the use of permanent magnets or electromagnets; in the treating of ore wet or dry; in the use of magnets acting continuously or intermittently; in the subjecting of the ore to alternate polarity, which causes the magnetic particles to reverse their position and thereby shake out the gangue, or to continuous polarity.

Different machines are suited for different purposes. Separation of weakly magnetic substances requires a high-power magnet. Separation of wet material without drying requires a machine adapted to use water. Separation of fine stuff down to dust requires a machine which will spread the material out in a very thin layer, since otherwise the magnetic particles are buried under the non-magnetic, and are not taken out owing to the pressure of the non-magnetic particles surrounding them.

In the United States alone over 300 patents have been granted on magnetic separators and it is obviously impossible to more than touch on a few of the principal types in a book of this nature. Several separators working on some of the most approved principles will be described and the student is referred to Ore Dressing and other authorities for a fuller treatise on the subject.

I. PRIMARY-MAGNET TYPE.

This group of separators can be conveniently divided into the four following classes:

(*a*) Cobbing magnets.

(*b*) Magnetic separators with the ore on conveying belts, pans, or chutes, which either traverse or are traversed by the magnets.

(*c*) Magnetic separators with the ore on or between revolving cylindrical rolls or drums, which are themselves or within which are magnets.

(*d*) Magnetic separators in which the ore falls in front of the magnets.

I. MAGNETIC SEPARATORS OF THE PRIMARY-MAGNET TYPE.

§ 548. (*a*) COBBING MAGNETS. — Cobbing magnets are used to remove from the crude ore bolts, nails, pick points, hammer heads, etc., before the ore passes to rolls or other fine crushers. They are usually suspended over a chute or belt conveyor, by which means the ore is brought beneath them. The material that has been attracted to the magnet is usually pulled off by hand whenever it has accumulated sufficiently. In some cases it may be necessary to shut off the current, but this is not customary. Cobbing magnets can be obtained for wet or dry work and Fig. 237 illustrates one form of cobbing magnet which was designed especially for wet work, though it may be used for dry work. The ore is automatically fed by a chute or belt conveyor and the magnetic product is automatically released and is carried away by a belt conveyor. The machine consists of a cylindrical drum revolving upon a horizontal axis. This drum is made up of the following parts: (1) shaft; (2) magnet core; (3) magnet

body; (4) zinc distance pieces or rings; (5) a gutta-percha ball pierced to make a water-tight joint for terminal wires; (6) cast-iron sleeves making a water-tight joint; (7) brass rings; and *AA'*, *BB'*, *CC'*, *DD'*, and *EE'* steel rings constituting magnetic poles. The coils are wound in the spaces between the distance rings (4) and the magnet body (3), one coil being wound in one direction, the next in the opposite and so on, thus making the steel ring poles *AA'*, *BB'*, etc., successively by north and south magnetic poles. The space between the distance rings and the periphery of the drum is filled with Portland cement, thus making the drum absolutely water-tight. All the parts are securely bolted together as shown in the illustration, and each coil is separately connected to terminal bolts at one end, for purposes of testing in case a coil burns out.

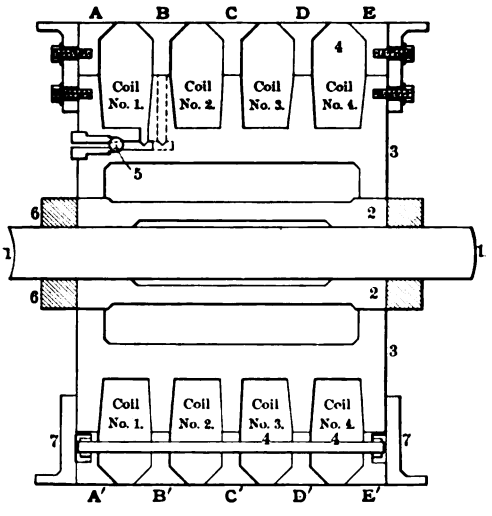

FIG. 237. — SECTION OF COBBING MAGNET.

The material is brought into the magnetic field by means of a belt, when running dry, and may be carried off by a belt running on the drum itself at right angles to the conveyor belt. When running wet the magnetic drum works in a box; the water which washes the material into the box washing away the tailings while the concentrates are removed by a belt passing over the drum.

This magnet may also be used as a true magnetic separator. There are many other forms of cobbing magnets, the most of which are much simpler in design and method of operation, and also cost less.

§ 549. (*b*) BELT-TYPE MAGNETIC SEPARATOR FOR DRY AND WEAKLY MAGNETIC ORES. — The Wetherill separator will be used to illustrate this group of machines because it is one of the oldest and most successful. The principle of operation of the "E Type," which is a very high-power machine, is shown in Fig. 238.

The material flows from the holes of the hopper to the feed roller, which discharges it in a uniform layer over the whole width of the conveyor belt, passing between the poles of the magnetic system. The latter consists of two or more horseshoe electromagnets, the poles of which are arranged one above the other. The poles of the upper magnets have the shape of a sharp wedge while the lower ones are flattened.

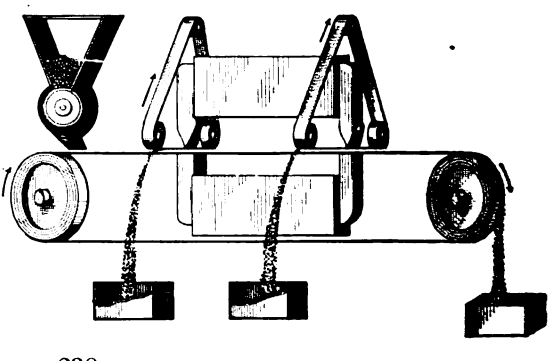

FIG. 238.— PRIMARY-MAGNET BELT-TYPE SEPARATOR FOR DRY AND WEAKLY MAGNETIC ORES.

With this arrangement of the magnets, the paramagnetic or weakly magnetic minerals, when brought into the magnetic field, are influenced in such a manner that at a comparatively small distance

from the lower pole the magnetic force of the upper poles, concentrated on the wedge-shaped edges, supersedes that of the lower sufficiently to cause the magnetic particles to jump toward the upper poles as soon as they are brought, by the conveyor belt, into the magnetic field. The cross belts serve to keep the magnetic particles from adhering to the poles and to carry them out of the magnetic field.

This type of machine is constructed with one, two, or three double magnets giving two, four, or six poles, each pair of poles being provided with a rheostat for regulating the current strength. The principal dimensions are given in Table 110.

TABLE 110. — SHOWING THE PRINCIPAL DIMENSIONS OF THE WETHERILL "TYPE E" MAGNETIC SEPARATORS. (ALL THE POLES ARE 18 INCHES WIDE.)

No. of Machine.	No. of Poles.	Magnet Wound for Ampere Turns.			Maximum Amperes at 110 Volts Direct Current.	Floor Space in Feet and Inches.	Height in Feet and Inches.	Weight in Pounds.
E No. 1a	2	30,000	.....	.....	6	5 ft. by 11 ft. 10 in.	8 ft. 6 in.	14,000
E No. 1b	2	60,000	.....	.....	14	5 ft. by 12 ft. 7 in.	8 ft. 6 in.	15,000
E No. 1c	2	100,000	.....	.....	30	5 ft. by 13 ft. 4 in.	8 ft. 6 in.	16,000
E No. 2a	4	30,000	60,000	.....	20	5 ft. by 17 ft. 3 in.	8 ft. 6 in.	22,000
E No. 2b	4	30,000	100,000	.....	36	5 ft. by 18 ft.	8 ft. 6 in.	23,000
E No. 2c	4	60,000	100,000	.....	44	5 ft. by 18 ft. 9 in.	8 ft. 6 in.	24,000
E No. 3	6	30,000	60,000	100,000	50	5 ft. by 23 ft. 4 in.	8 ft. 6 in.	30,000

§ 550. *Capacity.* — Table 111 gives an idea of the capacity of the No. 3 machine on ores of various sizes and from different localities.

TABLE 111. — CAPACITY AND CONVEYOR-BELT SPEED OF WETHERILL NO. 3 MAGNETIC SEPARATOR WITH 18-INCH BELT.

Material Treated.	Magnetic Product = M. Non-Magnetic Product = N.	Size Handled.	Capacity. Tons per Hour.	Conveyor Speed. Feet per Minute.
Colorado zinc-lead-iron sulphides.	Zinc blende (black jack) as M. product.	Through 14 on 20 mesh. " 60 " 120 "	0.75 0.35	45 50
Broken Hill, Australia, tailings.	Rhodonite as 1st M. product. Zinc blende (black jack) as 2d M. product. Galena and gangue as N. product.	" 10 " 16 " " 50 " 80 "	1.25 0.75	75 100
New Jersey franklinite ores.	Franklinite as 1st M. product. Silicate of manganese minerals as 2d M. product. Zincite, willemite, and calcite as N. products.	" 10 " 16 " " 50 " 80 "	2.50 1.50	100 110
Port Henry, New York, magnetite ores.	Hornblende as M. product. Apatite as N. product.	" 20 " 40 " " 40	3.50 2.50	125 125
Roasted iron-zinc sulphide middlings from wet mill.	Clean roasted pyrite as 1st M. product. Pyrite and blende middlings as 2d M. product. Zinc blende and gangue as N. product.	Through 0.25 inch.	2 to 4	100 to 200
Magnetite ores.*	Magnetite (90% of feed) as M. product.	Through 0.375 inch.	7.5 to 15	500 to 1,000

* A few dry battery cells were used in this case for exciting the magnets, as a 100-volt current could not be cut low enough with rheostats.

§ 551. *Width, Thickness, and Proper Conveyor-Belt Speed.* — The extreme width of belt for treating weakly magnetic ores is 18 inches. If a machine is designed for a wider belt, it requires a larger air gap between the upper and lower poles, due to the increased space required between the conveyor belt

and the take-off belt to allow the two streams of ore to pass. Consequently the narrower the belt, the less electrical energy required to remove a mineral with the same magnetic attractability; also for strongly magnetic ores the width of the belt could be increased as the electrical energy required is very low.

The proper thickness of belts when removing only very weakly magnetic minerals is 0.125 inch thick. This is as thin as the makers of belts will guarantee the belt to be in uniform thickness throughout and to run perfectly straight. When removing medium and weakly magnetic minerals 0.25 inch thick gives the best results. When removing highly magnetic minerals 0.375 inch thick gives good results. It has been found in practice that a belt 0.25 inch thick is the best to furnish with the standard machines, as almost every ore treated contains medium magnetic minerals to be removed before the weakly magnetic; and, in a number of cases, the ore to be treated would contain a small percent. of strongly magnetic material. In the latter case it is advisable to lower the under pole piece of pole No. 1 and, in some cases, poles No. 1 and 2 of the first magnet about 0.125 inch below the conveyor belt, and place a piece of brass, 0.125 inch thick, covering the top of the pole piece, between it and the conveyor belt. This, of course, could be done in treating medium and weakly magnetic minerals by using conveyor belting 0.125 inch thick. If it were not for the additional expense it would always be best to have each magnet on a separate machine, making the belt of the proper thickness for the material to be removed, and running the conveyor belt at the proper speed for each, as the more magnetic the material the faster the conveyor should travel to prevent magnetically tangling non-magnetic material with the magnetic material.

Attention is called to the fact that the speed of the conveyor or feed belts is limited when removing more than one mineral of different magnetic attractability by the least magnetic material. The faster the belt travels the stronger the magnet must be to overcome the momentum, also very weakly magnetic material takes time to be magnetized. Ore has often been seen to pass from the magnet points and then jump back to the take-off belts when the conveyor is traveling at too high a speed. The proper speed for each ore and size treated can only be determined by experimenting. This variation of conveyor-belt speed under different conditions is well brought out in Table 111 where a few of these speeds are given.

§ 552. *Width, Thickness, and Proper Take-off Belt Speed.* — Endless take-off belts are made 13.5 feet long, 3 inches wide, and of $\frac{1}{32}$ inch uniform thickness.

Like the conveyor belt, the speed at which these belts should be run can only be determined by experimenting. An expansion pulley may work on the shafts driving the take-off belts. If these belts are run too fast they will knock the material off that had been attracted to them. It is advisable to run them as slow as they will properly deliver their products, to save the wear on them. When delivering strongly magnetic material they are run about 1,000 feet per minute; on weakly magnetic material about 200 feet per minute; and on medium magnetic material about 500 feet per minute. The speed of these belts is governed by two things: first, the proper speed to get them to discharge clear of the conveyor belt; second, by the quantity of ore they have to deliver.

§ 553. *The Proper Distance Apart for the Magnets.* — This can only be determined by testing the ore on a machine. The poles should be set as close as possible; that is, so that the stream of ore on the take-off belts does not interfere by wiping the ore off at the conveyor belt, and the strength of the magnet should be regulated by the rheostat controlling the magnet. This

is done by all users of the machines. On strongly magnetic ores the distance between poles can be 1.5 inches, on medium magnetic ores the distance between the poles should not be over 1 inch, and on weakly magnetic ores not over 0.625 to 0.75 inch. They are often set as low as 0.5 inch. These adjustments govern the size of ore that can be treated on the machine. For the treatment of weakly magnetic ores no size larger than through 10 mesh seems advisable; on medium magnetic ore, nothing larger than 0.25 inch; and for highly magnetic ore, nothing larger than 0.375 inch.

§ 554. *Energy required.* — The electrical and mechanical energy required by a No. 3 18-inch machine having three poles — one with 30,000, one with 60,000, and one with 100,000 ampere turns — is given below:

30,000 magnet takes 6 amperes at 125 volts.
60,000 magnet takes 14 amperes at 125 volts.
100,000 magnet takes 30 amperes at 125 volts.
Total, 50 amperes at 125 volts, or 8.4 horse-power.

The mechanical power required to operate the above machines, depending upon the speed, is from 0.5 to 1.0 horse-power.

§ 555. *Wear and Tear on the Machines.* — The wear and tear on the machines is practically nothing. Taking the 60 machines in the United States which have been in practically continuous operation for from five to seven years, it is said that there has not been over $600 spent in repairs upon them. This, of course, does not include the cost of the take-off belts. These belts cost from $1 to $2 each, depending upon the quality, and they run from one month to twelve months, depending upon the size of the ore they are handling; the finer the size the longer the life. The only wearing part of the machine is the brass shoes on the upper pole pieces where the take-off rubs against them. As these wear they should be reversed and, after both sides are worn, should be renewed. The $600 above referred to covers these renewals. The stock of take-off belts should be kept in a damp place.

§ 556. *Attendance Required.* — At Franklin Furnace, New Jersey, there are two machine tenders and two helpers per shift. There is one tender and one helper on either side of the separator floor, the tenders watching and adjusting the machines and the helpers keeping the floor clean and oiling the bearings. There are at present 25 machines in operation. When contemplated changes are completed there will be 32 machines, 16 on either side of the separator floor, and the attendance will not be increased. At the Canon City Mill of the Empire Zinc Company they have eleven machines, with one tender and one helper per shift on the separator floor.

§ 557. (*b*) Belt-Type Magnetic Separator for Dry and Strongly Magnetic Ores. — A magnetic separator which, in some respects, is similar to the one just described but is entirely different in principle, is shown in Fig. 239. This machine was designed for the separation of strongly magnetic ores, or ores of high permeability, — namely, magnetite from apatite and a siliceous gangue — and combines a low initial and operating cost, a high capacity, simplicity, and uniform effectiveness to a very high degree.

The machine is constructed with a series of magnetic poles the polarity of which is alternately north and south. The action on ore particles in such a field is to turn the magnetic grains end over end, thus permitting any entrained particles of gangue or non-magnetic material to be dropped.

In operating, the feed hopper is always kept full to maintain a constant supply of ore to the feed roll, which makes from 15 to 20 revolutions per minute, and the depth of feed is regulated by a sliding gate near the feed roll. The

feed roll distributes the ore uniformly over the feed belt which carries the ore into the first magnetic field of the series, where the magnetic portion is lifted, striking the take-off belt between the pole pieces of the first and second magnets. A large part of the non-magnetic material drops directly into the tailings; while that portion entrained with the magnetic material is shaken off into the tailings by the sustaining action and changing polarity of the magnets, the action of gravity on the non-magnetic material, and the forward motion of the take-off belt which also carries the magnetic product away from the tailings. The products may be delivered either into receptacles or onto conveying belts.

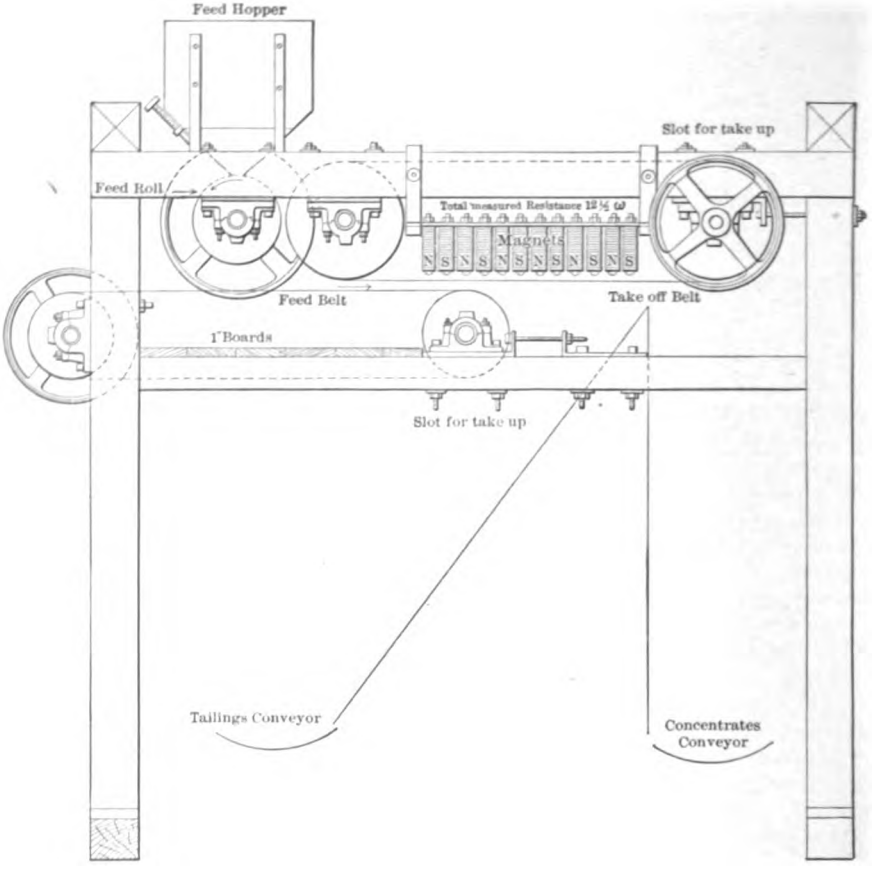

FIG. 239. — PRIMARY-MAGNET BELT-TYPE SEPARATOR FOR DRY AND STRONGLY MAGNETIC ORES.

The machines now in use have twelve magnets, of uniform strength, controlled by a rheostat. The feed and take-off belts are made of rubber with 3 and 2-ply canvas respectively. Both are riveted with copper rivets on a 6-foot lap. Each part of the separator is easily accessible and burnt-out magnets can be renewed or new belts adjusted in a short time. Adjustments are easily made, take-ups being provided for tightening the belts, which may be operated while the machine is running. Since the take-off belt is of the same width and run faster than the feed belt, the magnetic mass is spread

out more thinly per unit of surface. Belt speeds must be determined for each ore, but in general ores of low permeability or large size require slower belt speeds.

These separators have handled ores as coarse as 0.5 inch, and the average hourly capacity, up to and including all material through a 0.25-inch mesh, is from 20 to 25 tons. Thirty-six tons per hour have been handled on this separator with satisfactory results.

§ 558. (*c*) DRUM-TYPE MAGNETIC SEPARATORS FOR DRY AND STRONGLY MAGNETIC ORES. — The separator shown in Fig. 240 consists of two revolving drums of non-magnetic material and operates on principles like those described in § 557. Within each drum is a series of stationary electromagnets so wound that opposite poles are adjacent to one another. Each magnet extends the whole working length of the drum. The ore is fed upon the top of the first drum, and as the drum revolves, the magnetic particles adhere to it, while the non-magnetic particles fall into a hopper below. The magnetic particles,

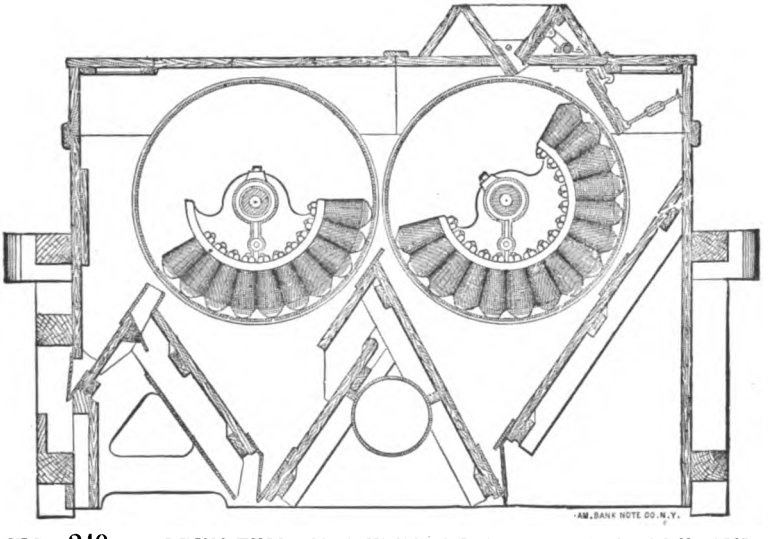

FIG. 240. — DRUM-TYPE MAGNETIC SEPARATOR FOR DRY AND STRONGLY MAGNETIC ORES.

as soon as they pass beyond the field of the magnets of the first drum, are thrown off by centrifugal force against the second drum. This second drum either revolves at a faster rate than the first, or else the strength of the current is less, so that some magnetic particles which adhered to the first drum fail to adhere to the second drum, and drop down into a second hopper, thereby forming a middlings product. Particles adhering to the second drum are thrown over a partition as soon as they pass beyond the magnets. The alternate polarity of adjacent magnets in each drum causes the magnetic particles to roll over and over while they pass by them. This action aids in the elimination of the gangue. A blast of air, acting in an opposite direction to the travel of the ore, removes dust. For best work the feed should not be over 1 mm. in size and perfectly dry. Details of two sizes of this machine are given in Table 112.

TABLE 112. — DETAILS OF DRUM-TYPE MAGNETIC SEPARATOR FOR DRY ORES.

Size of Drum in Feet.		Distance between Drums.	Drums.				Capacity. Tons per Hour.	Size of Feed.
			Revolutions per Minute.		Current Amperes.			
Diameter.	Face.		First.	Second.	First.	Second.		
2.0 2.5	2.0 3.0	1.0 inch	40	50	10.5	13.0	15 to 20 12 5	Through 1.00 mm. " 2.12 "

The power required is from 1.0 to 1.5 horse-power for the magnets of each drum and from 0.5 to 0.75 horse-power for revolving the drums.

§ 559. (*c*) DRUM-TYPE MAGNETIC SEPARATOR FOR WET AND STRONGLY MAGNETIC ORES. — The electromagnetic separator illustrated in Fig. 241

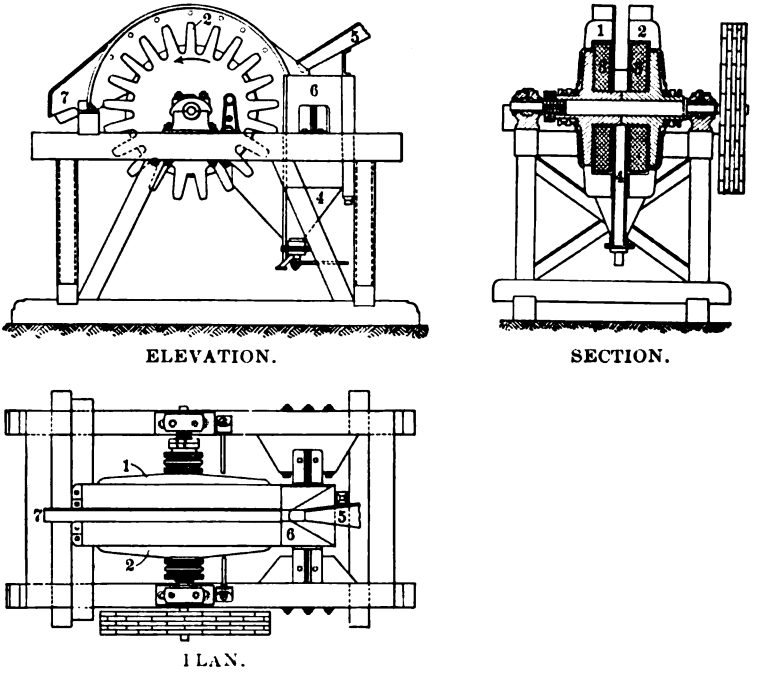

FIG. 241. — DRUM-TYPE MAGNETIC SEPARATORS FOR WET AND STRONGLY MAGNETIC ORES.

is a low-power machine intended for working with wet material. It contains two pole pieces (1) and (2), which are provided on their periphery with teeth and are fixed on a horizontal shaft at certain distances apart. The teeth of both pole pieces are situated directly opposite each other and terminate in blunt edges. Each of the pole pieces contains a coil (3) which is enclosed by a water-tight box. Between the pole pieces is fixed a narrow separating vessel (4) which is fitted with hopper-shaped inflow (5) for the pulp, a spitzkasten (6) provided with adjustable discharging slides and overflow for the waste, and a discharging channel (7) for the concentrated ore. The hubs of the pole pieces are extended outwardly and each carries two collecting rings for the supply and transmission of electrical current. The shaft is mounted

upon a wooden frame, to which the brush holders and the separating vessel are also fixed. The apparatus is driven directly by pulley.

The ores are concentrated, between the two revolving pole pieces, in the separating vessel, which is filled with water up to about the height of the shaft.

When the pole pieces are excited by the magnet coils, the magnetic lines of force become concentrated between the edges of the pole pieces and form magnetic fields which completely traverse the separating vessel (4).

If the pulp is fed through the inflow (5) into the separating vessel (4), the magnetic material remains adherent between the poles and forms "bridges" in the vessel (4). During the rotation of the pole these "bridges" are carried through the water and finally pass, while freely suspended in the air, to the collecting channel (7), where they are discharged under the action of strong jets of water. The non-magnetic material sinks slowly to the bottom of the receptacle and flows away through (4) to the waste outlet. The water level in the receptacle is regulated by a float connected to the discharging plug in (4) which is automatically opened when the water rises too high in the separator. Non-magnetic slimes which do not settle readily are discharged with the magnetic material and may be separated from the latter by overflowing from a concentrates box outside the separator. This separator has a capacity of about 2.25 tons per hour, and the magnets require 20 amperes at 110 volts.

§ 560. (*d*) THE EDISON MAGNETIC SEPARATOR. — This is simply a plain bar electromagnet before the poles of which the ore falls in a thin sheet, and the magnetic particles are thereby deflected slightly towards the magnet (not sufficiently to strike the magnet), while the non-magnetic particles fall vertically. Table 113 gives details of this magnet.

TABLE 113. — DETAILS OF EDISON MAGNETIC SEPARATOR.

Set Number.	Number in Set.	Dimensions of Magnet in Feet.			Copper Wire on Cores.	Current.		Capacity per Hour.	Size Treated.
		Length.	Width.	Thickness.		Amperes.	Volts.		
1	3	1.00	4.5	0.33	No. 4	15	80	16.0	Through 0.06 inch.
2	3	0.67	4.5	0.25	No. 6	10	120	4.5	" 0.02 "
3	5	0.33	4.5	0.17	No. 6	17	100	1.8	" 0.02 "

Cast iron is used for the cores which, in this case, is as good as wrought iron, since the cores are never saturated. The upper magnet of each set has the fewest turns of wire on its core and the lowest the most, thereby causing a proportional increase in magnetic force except in set No. 3 where all the magnets are of the same strength. The magnets of each set are wired in series, but the different sets are wired in parallel. The magnets of each set are placed one above the other as are the sets. In set No. 1 the second magnet re-treats the tailings of the first and the third re-treats those of the second. The heads of the first set are dried, re-crushed, and re-treated by the second set which makes products similar to those made by set No. 1. The tailings from the third magnet in both sets are waste. The heads from the second set are sent to a dusting chamber where all the fines are blown out and the coarse material is re-treated on the third set. In this set the tailings, instead of the heads, are re-treated by each succeeding magnet; the tailings of the first magnet are, however, waste and the second magnet re-treats the heads of the first.

II. SECONDARY OR INDUCTION-MAGNET TYPE.

This class of machines may be sub-divided and is classified as below:

(*a*) Magnetic separators with the ore on conveying belts, pans, or chutes which either traverse or are traversed by the magnets.

(*b*) Magnetic separators with the ore on or between revolving cylindrical rolls or drums, which are themselves or within which are magnets.

II. MAGNETIC SEPARATORS OF THE SECONDARY OR INDUCTION-MAGNET TYPE.

§ 561. (*a*) BELT-TYPE MAGNETIC SEPARATOR FOR DRY AND STRONGLY MAGNETIC ORES. — The separator shown in Fig. 242 is of the secondary or induction type and has a fixed electromagnet *BB'* with chamfered pole pieces between which passes an endless belt which is made to travel in a trapezoidal path by the supporting and guiding rollers. This belt is thickly studded with soft-steel rivets, held by cup-shaped washers, the latter having serrated edges *Z*. There are about 200 of these rivets per square foot of belt. The rivets and washers are copper plated to prevent rusting. The ore is delivered by a shaking

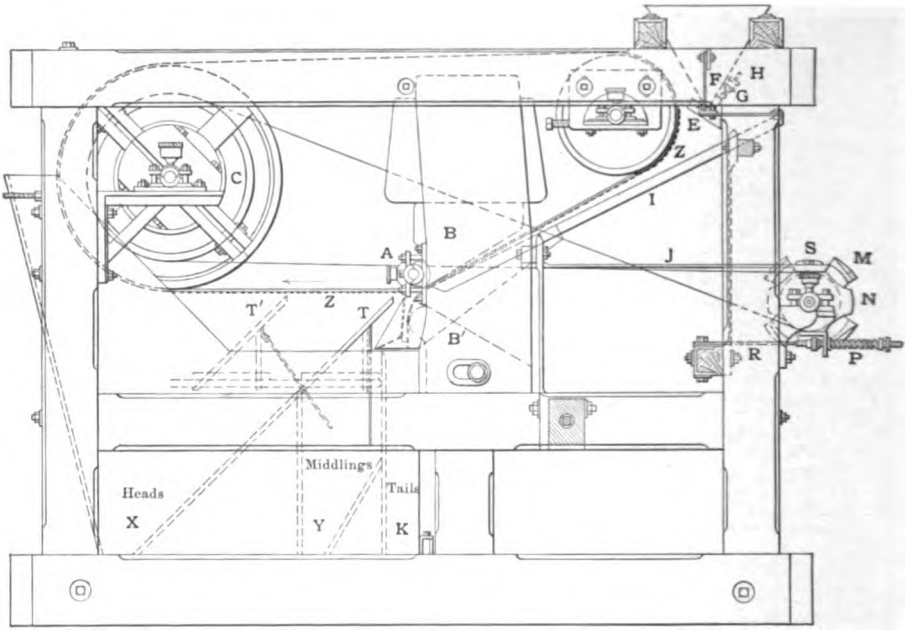

FIG. 242. — BELT-TYPE MAGNETIC SEPARATOR FOR DRY AND STRONGLY MAGNETIC ORES.

tray *I*, under the inclined portion of the belt. When the belt passes between the pole pieces *BB'* of the magnet, its studs become magnetized with an induced or secondary magnetism and attract the magnetic particles of ore. As the belt moves away from the pole pieces in its horizontal path the rivets become weakened in magnetic strength and gradually drop the attracted particles so that they fall into appropriate chutes, as shown in the diagram. They may be conveyed away from these chutes by belt conveyors or otherwise. Instead of a studded belt, a belt made entirely of soft steel has been successfully applied to a machine similar in principle to this. The speed of the belt is about 250 feet per minute. The machine is designed for sizes from 6 to 36 inches in belt width, having capacities from 7 to 46 tons per 24 hours, and requiring from 3 to 20 amperes or from 0.25 to 1.50 horse-power to operate. It finds its chief use in separating roasted pyrite-sphalerite ores.

§ 562. ANOTHER MAGNETIC SEPARATOR which, though of rather odd con-

UNIVERSITY OF CALIFORNIA

struction, properly belongs in this class, is illustrated in Fig. 243. It is a low-power separator, but the double-magnet machine given is capable of making five products in one operation, the products consisting of non-magnetic concentrates and four grades of magnetic products ranging from the most permeable to the least permeable.

The ore is fed from the hopper *A* upon a vibrating conveyor *B*, over which it passes in a thin layer through four zones of separation. These zones of separation are covered by the rims of rotating wheels *CC*, carrying secondary magnets *DDDD*. These magnets attract and carry away the magnetic material and discharge it over the sides of the conveyor into spouts *EE* for final delivery. The secondary magnets are saturated by the pole pieces *FFFF* of powerful primary electromagnets while over the conveyor; but are automatically demagnetized as they pass out of the magnetic circuit to the neutral position, where the rims of the wheels overhang the conveyor. The non-magnetic

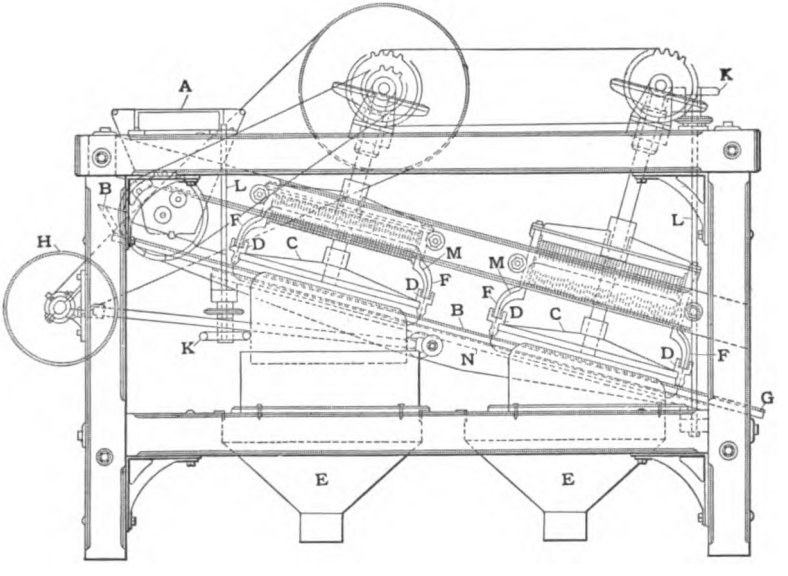

FIG. 243. — MAGNETIC SEPARATOR FOR DRY AND STRONGLY MAGNETIC ORES.

concentrates pass off to final delivery at *G*, the lower end of the conveyor. The spouts *EE* can be provided with longitudinal partitions so as to deliver the products of each field separately.

This separator has no electrical sliding contacts. The magnet coils are stationary and have solid connection with the main tension line. As the magnetic mineral is lifted and carried away without the magnets coming into direct contact with the mixed ore, there is but slight chance of losing concentrates by reason of mechanical entanglement.

The secondary magnets are made of laminated electric steel. The upper part *DDDD* of these magnets is made U-shape, and when in position for service the U closely embraces the lips of the primary pole pieces, thus presenting a sure area of surface between the primary and secondary magnets and reducing the magnetic resistance at this point to a minimum. The secondary magnets are supported by a heavy bronze carrier wheel to which they are solidly

attached. As the secondary magnets, traveling in a circle, pass from one field to the other, they reach points between the two primary poles where they lose their magnetic saturation, are neutralized and reversed as to polarity, thus effecting a perfect and natural discharge on both sides of the conveyor and producing four grades of magnetic mineral.

The conveyor of this machine is 18 inches wide and in some of the later types is supported on toggles for smooth action. Some of the separators are handling 20 tons of 0.125-inch stuff per day. Less than one horse-power is required and from 0.25 to 2 kilowatts of electrical energy is used for energizing the magnets.

§ 563. (*b*) DRUM-TYPE MAGNETIC SEPARATOR FOR DRY AND WEAKLY MAGNETIC ORES. — The International magnetic separator occupies in the Secondary or Induced-Magnet field a degree of importance about akin to that which the Wetherill separator occupies in the Primary-Magnet class. The International is a high-power machine and consists, in brief, of a cylindrical secondary magnet, hereafter called the armature, mounted upon a steel shaft and revolving horizontally between the poles of a large inverted horseshoe magnet.

The armature is made up of thin laminated discs, of a special annealed wrought iron painted with shellac, which are pressed tightly together and securely held by heavy cheek plates screwed on at either end. The "type C" separator, designed to treat minerals of high permeability, has these discs so cut and placed on the shaft as to give a slotted appearance horizontally on the armature, the slots being partly filled with wood to give a fairly smooth surface. In the "type E" separator, for handling minerals of lower permeability, the edge of each disc is toothed and, in assembling, the teeth on adjacent discs are so staggered that the surface of the finished armature presents a great number of small steel points as shown in Fig. 244. In operation the armature is revolved by a belt and pulley on the end of shafting (8).

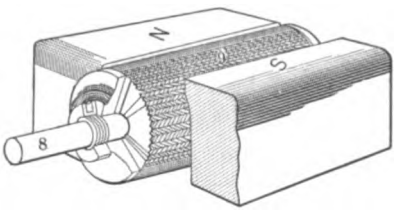

FIG. 244. — ARMATURE OF INTERNATIONAL MAGNETIC SEPARATOR.

On the massive cast-iron base (1) (see Fig. 245) rest the exciting coils (2) which surround the soft-steel cores (not shown); the cores being securely held down on the base (1). Resting on the cores are the massive pole pieces, *N* and *S*, which are securely bolted to the cores by stud bolts (3). The armature (9) rotating between the two pole pieces receives an induced magnetism and becomes the secondary and separating magnet, although receiving no direct electrical energy itself. At positions *N* and *S* the magnetism is the strongest, and it is the weakest at positions *a* and *b*, where the magnetism of the armature is constantly changing its polarity as it revolves.

Material to be separated is fed from the brass hopper (4), which is securely bolted to the pole pieces and should always be kept full to give a uniformly constant feed, through the adjustable brass gate and lip (5) onto the top of the revolving armature (9), striking it at a point *b* where there is little or no magnetism. Sometimes a brass roller feeder is placed between the gate (5) and the armature (9), giving a more even distribution over the armature surface. The armature (9), making 75 to 100 revolutions per minute, carries the material around to *N*, the magnetism constantly getting stronger and reaching its maximum strength at this point. Here another force is met with — centrifugal force — which assists gravity in throwing off the non-magnetic material, while the magnetic grains cling to the armature until a combination of gradually weakening magnetism, centrifugal force, and gravity releases

them, all the material coming off somewhere between N and a, at which point the polarity changes from north to south. At a, the point of reversal, there is no magnetism whatever, and even the most strongly magnetic grains drop off. Long, narrow, brass hoppers (7) with adjustable brass cutting shields (6) are supported under the armature from the shaft bearings by brass stirrups (13). These cutting shields (6) may be moved to take different pro-

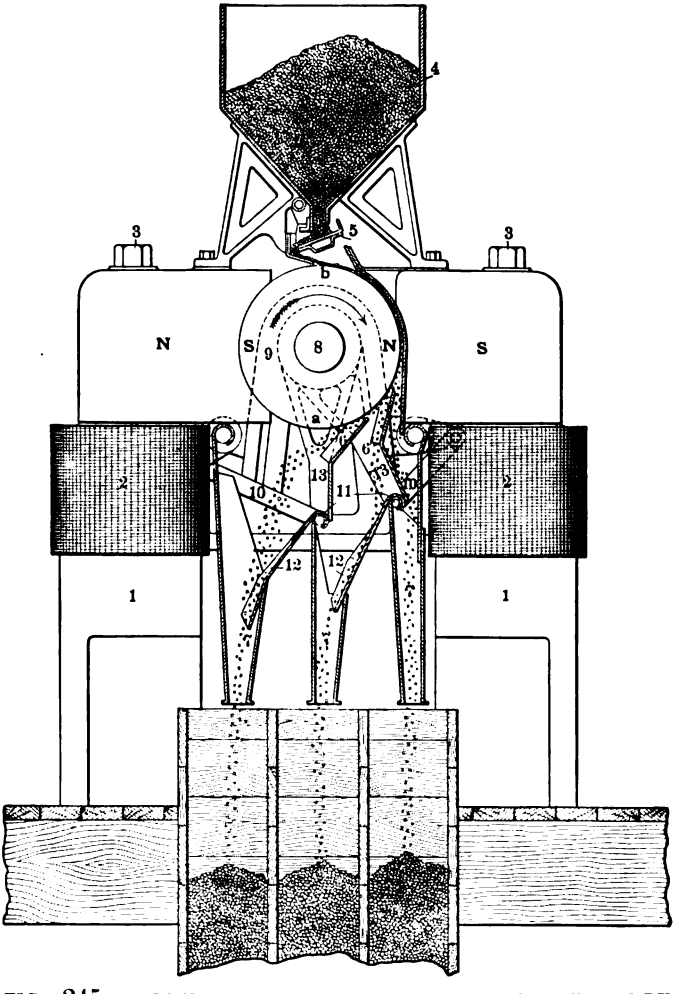

FIG. 245. — DRUM-TYPE MAGNETIC SEPARATOR FOR DRY AND WEAKLY MAGNETIC ORES.

ducts as desired from the under surface of the armature as the products successively drop off under gradually weakening magnetic attraction. In this way several different minerals can be separated in one operation. The position of each cutting shield is controlled by links (10) mounted on brass shafts (11) extending across the separator and holding the brass aprons (12) as shown in the cut. These shafts are provided with set screws for locking the cutting shields in any desired position.

A standard machine weighs 10,000 pounds, is 3 feet 2 inches wide by 3 feet 9 inches long and 5 feet high. In operation, one horse-power is used for excitation and one horse-power for mechanical operation. The capacity of a single machine is from 2 to 4 tons per hour, depending on the character of the ore and the thoroughness of its preparation for separation. As more than one machine is usually necessary to effect a commercial separation, the capacity per machine in operation would be less than this.

In a magnetic separator, the heavier the primary magnets the less electricity is required to give the secondary magnet the required attracting strength. The field magnets of this separator weigh 9,000 pounds, this weight being distributed between the copper wire and the soft-steel field magnets so as to get the best possible results. As it takes a great deal of electricity to make the magnetic lines of force pass through the air, the pole pieces are brought up as close to the armature as possible. Just sufficient room is left to allow the material fed to pass between the armature and the pole piece. The magnetism is much more concentrated on the points of the armature than upon the face of the pole piece, as an attractable particle, even when put on the bare steel face of the pole piece, jumps across to one of the points on the armature.

ROASTING AND CALCINING FOR MAGNETISM.

§ 564. The separation of many of the mixed sulphide and oxide ores is best accomplished by the aid of magnetism. With the very high-power magnets, like the Wetherill and International, minerals may be attracted which show no marked magnetic properties whatsoever and which can not by any commercial means be converted into more highly magnetic forms. This class of minerals varies considerably in permeability and this even applies to the same mineral in the same ore body. Fortunately, however, with these minerals there often occur other minerals which while naturally non-magnetic may be changed over into a very strongly magnetic condition and lifted from the ore by means of weak magnets which are not strong enough to lift the more weakly magnetic minerals. This ability of man to overcome the fickleness imposed on such minerals by nature is constantly receiving and deserving more thought and attention.

§ 565. As already intimated there are certain minerals so nearly non-magnetic that the strongest magnets do not influence them, but which can be rendered strongly magnetic by subjecting them to a roast under suitable conditions. The following non-magnetic sulphides are susceptible of being converted into magnetic sulphides by a quick oxidizing roast, or into magnetic oxides if the roast be continued long enough to drive off all the sulphur; the non-magnetic carbonates and oxides given in the list may be made strongly magnetic by calcining the carbonates and subjecting the oxides to a roast in a reducing atmosphere.

Sulphides.	Oxides and Carbonates.
Pyrite FeS_2	Hematite Fe_2O_3
Marcasite FeS_2	Limonite Fe_2O_3
Chalcopyrite $FeCuS_2$	Siderite $FeCO_3$
Bornite $FeCu_3S_3$	Wolframite $FeMnWO_4$
Arsenopyrite FeAsS	Chromite $FeCr_2O_4$

The importance of this part of the process of preparing an ore for magnetic separation as bearing on the success of the whole operation is so great that it is deemed best to now point out the precise conditions necessary to obtain a satisfactory roast and to say a few words about the furnaces which may be used.

§ 566. ROASTING THE SULPHIDES. — The change of marcasite or pyrite into the magnetic sulphide may be accomplished by a short roast in the presence of air, whereupon a chemical change analogous to the following takes place:

$$(1)\ 7\ FeS_2 + 12O = Fe_7S_8 + 6\ SO_2.$$

The exact sulphide that is formed varies with the length of roast, the above being given only as an example. This sulphide is only formed on the surface of each grain, the kernel of the grain still being FeS_2. With coarsely crushed and unsized ore, in some furnaces, this operation is rather difficult to control, as it is easy to over-roast some of the small sizes, forming an oxide of iron and making a product of uneven permeability. With sized coarse ore or an unsized ore crushed to $\frac{1}{2}\frac{1}{0}$ inch this method of roasting gives the best of results provided an easily regulated furnace be employed.

As the roast is carried further the sulphide formation gradually closes in on the heart of the grain in the form of a concentric sphere, and the sulphur on the outside of the grain is all driven off resulting in the formation of the magnetic oxide as follows:

$$(2)\ 3\ Fe_7S_8 + 76\ O = 7\ Fe_3O_4 + 24\ SO_2.$$

This may continue until the whole grain is changed over into the strongly magnetic oxide, Fe_3O_4. If now the roast be carried one step farther another atom of oxygen is taken up by the iron, resulting in the formation of Fe_2O_3 as below:

$$(3)\ 2\ Fe_3O_4 + 3\ O = 3\ Fe_2O_3 + O_2.$$

This compound of iron is analogous to hematite and is only very feebly magnetic, therefore we have done something which is apparently fatal to successful magnetic work. This may, however, be re-converted into the magnetic oxide by exposing it, at the end of the roast, to a reducing atmosphere or by adding carbon to it when the following chemical change takes place:

$$(4)\ 6\ Fe_2O_3 + C = 4\ Fe_3O_4 + CO_2.$$

Fe_2O_3 and Fe_3O_4 are convertible into one another according to whether the atmosphere of the roasting furnace is oxidizing or reducing.

The magnetic sulphide is iridescent and black; the magnetic oxide is very dark brown, nearly black and does not retain its magnetism as long as the natural magnetite, changing over into the feebly magnetic red oxide.

In this country the usual practice is to either form the magnetic sulphide, which requires from 1 to 45 minutes, or to roast from 2.5 to 4 hours and produce the magnetic oxide. It is never carried beyond this point. In Europe, however, where they utilize the sulphur to make sulphuric acid, all the sulphur is driven off and the ore brought back to the magnetic oxide by subjecting it to a reducing atmosphere.

§ 567. ROASTING THE OXIDES. — Hematites, limonites, and ores of a similar nature may be made strongly magnetic by simply heating at a high temperature to expel some of the oxygen from the Fe_2O_3, leaving Fe_3O_4 as in equation (5).

$$(5)\ 6\ Fe_2O_3 = 4\ Fe_3O_4 + O_2.$$

The heat drives off any combined water that may be present, but this method of treatment is expensive of fuel. The method most commonly used on this class of ores is to reduce the ore at red heat, in the absence of air, by means of solid carbonaceous matter as in equation (4), or by reducing gases, usually hydrogen and carbon monoxide, as in equation (6).

$$(6)\ 6\ Fe_2O_3 + CO + H = 4\ Fe_3O_4 + CO_2 + H_2O.$$

§ 568. CALCINING THE CARBONATES. — According to Le Chatelier siderite and the spathic iron ores break up into FeO and CO_2 when heated to 800° C. In a neutral atmosphere the FeO is changed over to Fe_6O_7; but, if the atmosphere is slightly oxidizing, Fe_3O_4 is obtained. Both of these oxides are very strongly magnetic. With a free access of air Fe_2O_3 quickly forms. If the air is completely excluded the FeO reacts with the CO_2 forming Fe_3O_4 and carbon monoxide gas. After the CO_2 is completely expelled it becomes very easy to over-roast and produce the non-magnetic red oxide. Success for the process depends upon using a furnace with a perfect air control.

Before charging, the ore is usually mixed with from 3 to 5% of fine coal, or coke, to aid its decomposition and to furnish a reducing or neutral atmosphere in the furnace. With coarse ore 15 minutes, and with fine ore 35 minutes, at 850° C., usually results in the production of Fe_3O_4. Longer heating at this temperature affects sphalerite, if it is present, and in the normal calcined product the sphalerite is covered with a white film of superficial oxidation, but this does not indicate any serious loss. Calcining is always accompanied by decrepitation and loss of weight, and the greatest care has to be exercised to prevent sintering. The calcined product is usually sized before it is separated magnetically.

§ 569. EXPERIMENTS. — Tests have been conducted with pyrite to ascertain the length of roast best suited for obtaining the maximum amount of magnetic material, the pyrite being roasted in a thin layer. The pyrite used was crushed through 30 and sized on 40 mesh. The oversize of the 40-mesh screen was used. Small portions of the pyrite, one gram in weight, were roasted for periods of $\frac{1}{8}$, $\frac{1}{4}$, $\frac{1}{2}$, 1, 2, 4, 8, and 16 minutes and immediately thrown upon a cold plate. From the tests it was concluded that about 1.5 minutes would give the maximum magnetic product under the above conditions. These experiments are of especial interest in connection with the shaft furnaces referred to later. Tests, similar to the above, were conducted on the same ore for the last six periods of time and allowed to cool slowly from a low red heat. It was found that, under these conditions, the pyrite was practically dead roasted, while in no case as much as 50% had been rendered magnetic. It would therefore seem that rather rapid cooling favors good results and this is borne out in practice.

Tests have shown that FeS_2 begins to lose its sulphur and change over into the magnetic sulphide, and later into the oxides, at a temperature of 370° C., and roasting for magnetism is usually conducted at a temperature between 370° and 600° C. Experimentally as high as 620° C. has given good results, but in practice this would probably result in a serious loss through the oxidation of fine particles of sphalerite were it present. Below 400° to 460° C. the pyrite does not become wholly magnetic and it is usually roasted close up to 600° C., which is about the ignition point of sphalerite. Almost any separator can obtain good results when fed with a properly roasted material; but no separator can do good work on a poorly roasted feed.

§ 570. FURNACES. — The first requisite for a roasting or a calcining furnace is that there must be a quick, easy, and efficient control over the amount of air entering it. The temperature can be regulated by a pyrometer, but this is usually done by eye. Fuel is required in all of the furnaces some of the time, and in some of them all of the time. This may be solid, liquid, or gaseous.

Several types of furnaces are in use, but the type in the greatest favor is a slight modification of the Howell-White. Furnaces of this kind, when handling an ore containing 25% or more of sulphur, after once being heated hot enough with fuel, require no more fuel until for some reason the furnace gets cold again. Hence they are economical of fuel, the sulphur in the ore

furnishing the necessary heat. Another furnace which is finding favor is of the shaft type. This is especially adapted to roasting pyrite ores. It consists of a tower with two flues; the hot gases from the fire box pass up one flue to the top of the furnace and there come in contact with a thin stream of falling ore. They ignite the sulphur while the ore falls through the second or roasting flue to the base of the furnace. The ore is roasted in the down-draft flue while descending with the hot gases and is quickly cooled and conveyed out of the furnace. Furnaces of the McDougall type cost less to erect and often give good results, especially on finely crushed ore. Reverberatory furnaces have also performed good service in some sections, but for details about these and others the student is referred to other sources. In all cases the ore is usually cooled quickly and many ingenious schemes have been devised for this purpose.

The depth of the bed of ore in the furnace at one time varies from a thin stream to one 12 inches thick. After a sulphide ore is so roasted as to produce the magnetic sulphide on its surface even the finest particles will not float. This makes possible a very close later separation of any lead or zinc minerals on tables in the wet way. It is well to bear in mind that in roasting FeS_2 it swells, loses weight, and often decrepitates. The amount of producer gas required to convert 100 tons of wet mill tailings — composed of pyrite, sphalerite, and quartz — into the magnetic sulphide is 433,440 cubic feet of a calorific value of 61 British thermal units. This will reduce the sulphur 4.7 points.

ELECTROSTATIC SEPARATION.

§ 571. PRINCIPLES. — It has been found that many metallic sulphides and other minerals are good conductors, while most gangue minerals and certain of the sulphides, such as blende, are relatively poor conductors of electricity. The principle upon which electrostatic separation depends is, that two bodies charged alike electrically repel one another, while if charged oppositely they attract each other. Thus if a mixture of good and poor conductors, in a neutral state, be dropped upon a highly charged conducting surface, the good conductors immediately receive a charge similar to that of the surface and are repelled, while the poor conductors are much more loath to receive the charge and therefore not so readily repelled. If, however, a material charged to a high potential of the opposite sign be fed to the above-mentioned surface, the good conductors, as before, assume immediately the condition of the charged surface and are repelled, while the very poor conductors, carrying a charge opposite to that which the surface carries, by the above law, tend to cling to that surface, thus making a sharper division of the separation. Theoretically the separation of two minerals does not require that one of them be a very good conductor and the other a very poor conductor, but merely that there be a difference in the degree to which they will conduct electricity. Commercially, of course, there are limits to this.

§ 572. The following lists of minerals may be given to show some of the substances which are usually good conductors and some which, as a rule, are poor conductors. Minerals whose composition is variable, such as garnet, sphalerite containing iron or manganese, etc., belong sometimes to one class and sometimes to the other. The composition of sphalerite or blende is a very important factor, and, as a general statement, a large percentage of iron or manganese combined with it chemically makes of the blende a very fair conductor. Blende from Broken Hill, New South Wales, may be separated electrostatically from Missouri or Wisconsin blende.

Good Conductors. — Native metals, pyrite, pyrrhotite, chalcopyrite, galena,

garnet, molybdenum, chalcocite, argentite, tetrahedrite, tellurides, hornblende, black sands, most sulphides, and most copper, iron, silver, and manganese minerals.

Poor Conductors. — Quartz, quartzite, calcite, limestone, porphyries, slates, sandstones, garnet, spinel, sphalerite, smithsonite, barite, gypsum, granite, fluorspar, monazite, and most silicates and gangue rocks.

§ 573. SEPARATORS. — Some types of electrical ore separators utilize only the repellent action of the field, while others use both the repelling and attracting actions. The best known types are built mainly of iron, the frame and separating roll being electrically grounded to prevent shocks from accidental contact with the machine. One terminal of the electrifying apparatus is brought to a second stationary electrode in close proximity to the roller, making an electrical field which may be varied from nothing to one very intense. Upon the character of this second electrode and upon the electrifying apparatus depends the character of the action of the separator. Fig. 246 illustrates the principle of action in one type of the machines.

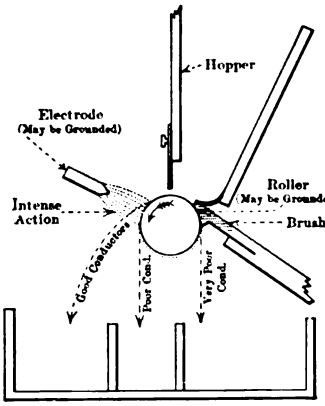

FIG. 246. — PRINCIPLE OF ELECTROSTATIC ORE SEPARATOR.

The machine in use on zinc ores is about 6 feet long, 15 inches thick, and is built up on the sectional bookcase principle, the number of rollers being adapted to the requirements of the ore, so that the height is variable, averaging about 6 feet. The machines will treat material from 5 mesh to finer than 200 mesh, the capacity varying with the ore and mesh of the material from 6 to 50 tons per 24 hours. A first-class separation has been made where most of the material passed a 200-mesh screen, after the impalpable dust had been washed away. Two attendants per shift are required in a plant handling about 75 tons per 24 hours.

The electrical apparatus consists of one central unit for the plant, located preferably in the engine room under the care of the engineer, the wiring to the machines being similar in system to that of the electric lighting of the building. The electrical apparatus is entirely independent of atmospheric conditions, and is of almost unlimited capacity. As there are no shaking parts the separator takes but a small fraction of a horse-power in mechanical and electrical power together, the only mechanical power required being that necessary to turn the rollers against the friction of the scrapers. The machine must be fed with dry, warm ores.

The underlying principle of the art is the electrical conductivity of the material, the separation being due to the differences of conductivity, so that any process utilizing these differences of conductivity and the electric field falls within this scope. Electrostatic and magnetic separation are often confused, but their principles and actions are entirely dissimilar. Thus electrostatic separation, a dry process, being capable of utilization in a dry field and applicable to the concentration of most sulphide ores, independent of gravity and magnetic susceptibilities, has a broad and unique field of its own.

PNEUMATIC CONCENTRATION AND SEPARATION.

§ 574. Air may be used much in the same way as water, as a medium for sorting grains of ore into grades according to their settling power. The conditions which point to the use of air for concentration are: (1) the removal

of dust from natural or pulverized stuff by a blast of air; (2) the treatment of placer gold or ores in general, in districts where there is a scarcity of water.

There are four chief classes of apparatus for separating ores, that depend upon air as a medium:

I. Those using a continuous blast of air which acts on the particles and yields graded products.

II. Those which project the ore particles through air by a force other than an air blast, the heaviest grains going farthest, the other grains being graded according to their momentum.

III. Air jigs, or those which subject the ore in a bed to a series of upward, intermittent pulsations of air, the lighter particles rising to the top layer, the heavier particles settling beneath in the same manner as in the hydraulic jig, when run without suction.

IV. Pneumatic tables, or those which subject the ore in a bed to constant currents of air arranged to produce riffles in the bed. The lighter particles rise to the upper layer and go down the slope of the table to the tailings side, while heavier grains settle and, by the jerking motion of the table and the guiding action of the riffles, are carried to the concentrates side.

I. AIR CONCENTRATORS USING A CONTINUOUS BLAST OF AIR.

§ 575. The devices are of many forms, one of which is shown in Fig. 247. Upon a horizontal disc *D*, revolving at a high speed, the dry ore is fed in a steady stream from the hopper *C*. The particles are thrown out radially in a horizontal direction, but are stopped by an enclosing vertical, truncated cone, expanding slightly downward, which surrounds the disc. In the annular space between the disc and the cone is an upward current of air induced by fan blades, *A*, revolving with the disc. This current lifts the lighter portion and discharges it in an outer chamber, *E*, while the heavier particles fall in an inner chamber, *H*. After having dropped its charge, the air returns from the outer to the inner as shown by the arrows, it being distributed to the pulp by the perforated plates, *G*, and acts over again. It is made in three sizes, 3½ to 6 feet in diameter, and they treat from 1 to 4 tons per hour. The advantage lies in its compactness for performing the duty of a screen, separating fine dust from coarser material.

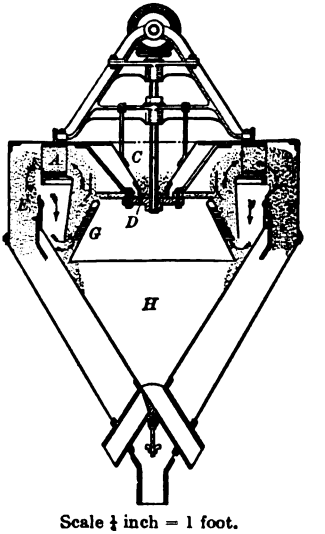

Scale ¼ inch = 1 foot.

FIG. 247. — PNEUMATIC DUST SEPARATOR.

Air has been used to some extent in this country for getting dust out of coal. It is particularly advantageous to remove the dust before washing coal, as the dust hinders the washing of coarser sizes, increases the percentage of loss, and, adhering to the washed coal, prevents it from drying quickly. When handling 500 tons of coal a day it costs about 5 cents per ton treated to remove the dust.

Air is used in dressing asbestos at Thetford, Quebec, where rock that has been reduced in a Cyclone pulverizer is passed over an 11-mesh shaking screen, and from the oversize of this screen the fibrous portion is drawn away from the sand by an air current.

Air may be used to take injurious dust out of the ore in a dry milling operation, thus saving the health of the workman.

II. AIR CONCENTRATORS WHICH PROJECT THE PARTICLES BY A FORCE OTHER THAN AN AIR BLAST.

§ 576. One of the best known separators belonging to this class is shown in vertical section in Fig. 248 and consists of a large pan 6 m. in diameter, with a series of concentric troughs, *c*. Suspended freely over the center of the pan is a disc 450 mm. in diameter, which revolves at the high speed of 3,000 revolutions per minute. Over the revolving disc is a stationary disc or cover, *b*, 2 m. in diameter. Particles of ore from the two hoppers *a* and a_1 are fed near the center of the revolving disc and are thrown out radially by centrifugal force with high velocity against an inflowing current of air, which comes in all around under the edge of the stationary disc and is drawn out through a central orifice, l_1 under the revolving disc, by a suction fan, and discharged to a dust chamber. The air takes out the fine dust. The other particles which are able to resist the air current fall into the concentric troughs. Those with the most momentum go to the farthest trough; the others are graded in the different troughs according to their momentum. These are sorted products analogous to those of a hydraulic classifier, the outer trough containing

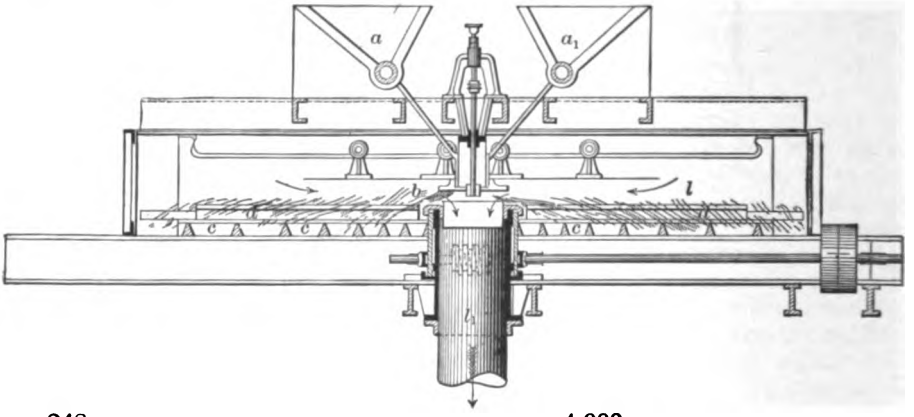

FIG. 248. — VERTICAL SECTION OF SEPARATOR, 4,000 MM. INSIDE DIAMETER.

the coarsest product corresponding to the first spigot, and the exhaust containing the fine dust corresponding to the slime overflow. Each of the troughs has a cross slit at one place in the bottom. Revolving arms, *d*, with scrapers for each trough, serve to bring the ore to the slits. The outer trough yields pure concentrates; the products from the others are sifted, and yield fines, which are concentrates; coarse, which are waste; and middlings, which are re-treated dry or, better, treated wet on tables. The fine dust is also best treated wet on tables. The various adjustments are: the speed of the disc, the velocity of the air current, and the rate of feed. The disadvantages are that ore must be crushed fine, 1 mm. to 0.85 mm., which causes much dust. This fine stuff if taken out is not satisfactorily treated on any existing machine; if not taken out, it contaminates all the other products. The power required is 3 horse-power for the machine and 2 horse-power for the fan. The capacity is 1,800 to 2,700 pounds per hour.

III. AIR CONCENTRATORS USING INTERMITTENT PULSATIONS OF AIR TO EFFECT THE SEPARATION.

§ 577. AIR JIGS. — One of the most successful air jigs is shown in section in Fig. 249. It substitutes air for water as a pulsating medium for effecting the separation. The essential features of the machine are as follows:

Through the chamber *A* runs a rectangular diaphragm *a*. This diaphragm is composed of an outer rim of leather, the sides of which are firmly bolted between the upper and lower sections of the air chamber. Within the chamber the leather is firmly attached to a strong wooden frame, *b*, which is divided by transverse wooden braces *c*. Between these braces, and attached to them, are two rubber flaps resting upon a sheet of perforated metal. The diaphragm is connected to two eccentric boxes in which revolve a fixed eccentric attached to the working shaft, each eccentric being cased by a loose eccentric sleeve, *d*, which can be adjusted and held by a set screw, *e*, allowing a throw of $\frac{1}{8}$ to $1\frac{1}{4}$ inches. A movement is thus communicated to the diaphragm which discharges at each revolution an air blast to the chamber *A*, which blast then passes through the fixed diaphragm *G*, also arranged with rubber flaps, and is discharged through the grated sieve, *g*, upon a broadcloth bed, *f*, stretched over same. Resting upon the broadcloth bed is the concentrating top which

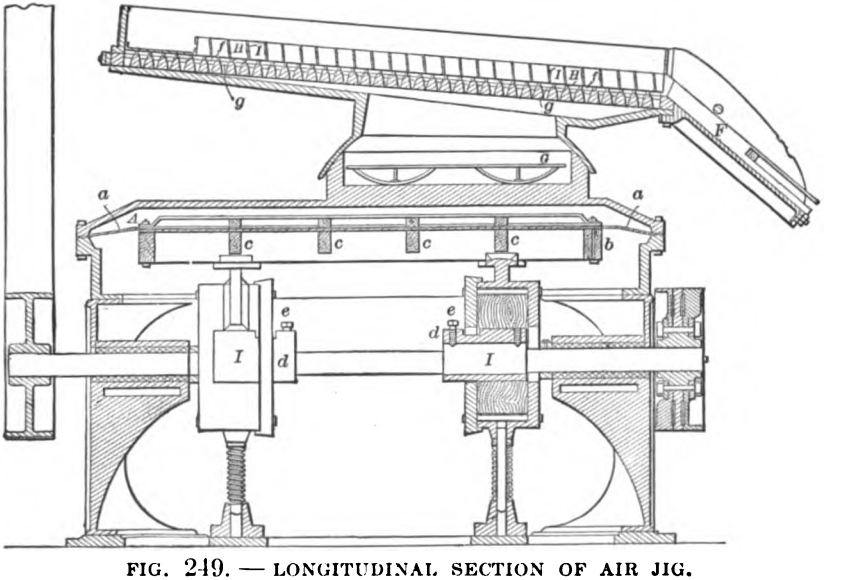

FIG. 249. — LONGITUDINAL SECTION OF AIR JIG.
SCALE — $\frac{3}{4}$ INCH = 1 FOOT.

consists of two sets of guide strips, running diagonally to each other and at angles of 30° to 45° with the side of the frame. The lower set of strips, *H*, are of brass, $\frac{1}{16}$ inch thick, $\frac{1}{8}$ to $\frac{1}{4}$ inch high, and $\frac{5}{8}$ to $1\frac{1}{4}$ inches apart, depending upon the material to be treated. The upper set of strips, *I*, called skimmers, run upon and diagonally across the lower set. They are also of brass, $\frac{1}{16}$ inch thick, $3\frac{1}{2}$ inches high, and $\frac{5}{8}$ to $\frac{3}{4}$ inch apart. These upper strips terminate 2 inches from the left or discharge side of the top for a distance of 23 inches from the discharge end, thus leaving a free discharge channel for the gangue or tailings. The concentrating top may be removed from the concentrating bed at will. Any desired vertical or lateral inclination of the concentrating bed is obtained by means of a universal joint which is held in the desired position by means of two clamps situated at opposite sides of same. The maximum inclination toward the discharge side is 11° and that toward the concentrating side 5°, depending upon the character of the ore being treated and the mesh to which it has been sized. As a general rule the larger the mesh and the heavier the mineral, the greater the inclination in both directions.

The crushed ore, after being closely sized, is fed from a hopper (not shown) placed at the head of the concentrating bed. This hopper is adjustable in position and it is provided with small sliding gates, by means of which the flow is adjusted.

It will be evident from the foregoing that when crushed ore, composed of particles of different gravities, is fed upon the concentrating bed, the pulsations through the broadcloth, due to the blasts before described, cause the heavier mineral particles to be thrown to the bottom, where they settle down between the lower metal strips and are thus guided toward the concentrates side of the table, the lighter or gangue material being thrown to the top where it is subjected to successive skimming actions by the upper set of metal strips and thus guided in the opposite direction toward the tailings side of the table. After the bed is filled to an even depth of ½ to ¾ inch and the resulting products of concentrates, middlings, and tailings begin to flow regularly and smoothly over the discharge end of the table, they are guided to any point of disposition by means of wooden guide strips, *F*. It is found that the various minerals contained in an ore classify according to their specific gravities; the heavier mineral, being interrupted in its flow by the side of the concentrating top, is spread out in a well-defined strip by the action of the upper skimmer, the next heaviest taking its place beside it, etc. There is therefore a distinct separation of all the minerals should there be sufficient variance in their specific gravity.

To obtain the best results the ores treated should be below 2 mm. and should be closely sized, say through a 20-mesh screen on a 30-mesh, through 30 on 40, 40 on 60, 60 on 80, 80 on 120, and 120 on 250. Of course, when there is considerable variance between the mineral and gangue, close sizing is not so important. The speed of the machine varies from 350 revolutions per minute in the case of coarse material to 450 for fine. This variation in speed is obtained by means of cone pulleys. The stroke or force of air is varied by the length of eccentric throw by adjusting the eccentric sleeves before described. The greater the throw of these eccentrics the stronger the air blasts. The heavier the material treated the heavier the air blast required. All machines are now supplied with an adjusting device by means of which the throw of the eccentrics may be altered at will without stopping the machine. The capacity of the machine varies from 9 to 16 tons per day of 24 hours, according to the character of ore treated, and the horse-power required varies from 1¼ to 2.

The machine requires not only that a constant rate of feed be maintained but that the percent. of concentrates should be constant. Otherwise it will send concentrates into the tailings or tailings into the concentrates, both of which can be averted only by constant watching and adjustment. One man can tend six machines.

The modern form of this jig is used successfully to-day for graphite and garnet separation.

IV. PNEUMATIC TABLES.

§ 578. THE PNEUMATIC TABLE described here is a table of the Wilfley type with main sills, tilting frame, supports, table top, and a head motion which gives a jerking propelling movement to the grains of sand in much the same way as other tables. The radical difference lies in the fact that it uses, instead of water, a current of air which rises through the bed of sand under a pressure of 0.5 ounce per square inch and so completely mobilizes it that the sands are stratified. The heavier grains are pushed forward by the head motion toward the concentrates side, while the lighter grains roll or flow by the force of gravitation down the slope toward the tailings side.

The construction of the table is the matter of greatest interest and importance. Its outline is rectangular with the usual feeding side, mechanism side, tailings side, and concentrates side. In plan the skeleton looks like a wooden grizzly, while Fig. 250 shows a cross-section detail in which *A* is the pervious cloth top; *B*, impervious paper strips; *C*, supporting ribs; *D*, open cloth to support the paper strips. The paper strips are narrow, tapering, and terminated along a diagonal line. Above is the layer of pervious muslin cloth, while the space between and beneath the bars is used as a pressure box into which air is fed by a separate blower for each table.

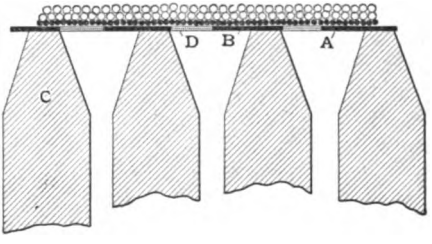

FIG. 250. — DETAIL OF PNEUMATIC TABLE.

The speed of vibration is very high, 450 to 500 revolutions per minute. This, combined with the great mobility of the sand, due to the rising air current, gives the table a capacity which is said to be 2.5 to 3 times as great as that of a Wilfley table on the same ore.

The dust has to be removed and the coarse material closely sized before being fed to the table. The dust cannot be concentrated.

§ 579. DRY BLANKET. — A primitive method of winnowing and concentrating ore dry upon a blanket, exists in some parts of Mexico. Two men roll and toss the finely broken ore in a blanket, exposing it to the action of the wind. The finest portion is blown away; the rich portions of horn silver and metallic gold become entangled in the hair of the blanket, while the poorer part is turned off.

§ 580. DRY PANNING. — A method of dry panning, combined with hand picking, winnowing, and blowing with the mouth, is used in the placer gold fields of Western Australia.

§ 581. ADVANTAGES OF AIR AS COMPARED WITH WATER. — The chief claim for favor is in the ready accessibility of a medium of separation, without the cost of pumping, especially in dry climates. It also gives no trouble from freezing in cold weather, has no harmful chemical action on the products, and its products are dry and ready to ship. Where the rich mineral is of very high value and also soft and brittle, as in tellurides, gray copper, and other ores, it is easy to draw off and settle dust, rich enough to ship, by the dust chamber. This may give a greater saving than the wet method, which has greater losses in tailings and greater difficulty in settling fine slimes. The greasy flotation, which causes some loss and much trouble with the water treatment, does not occur with air. The cohesion between mineral particles and the medium is less in the case of air than in water. The enveloping film is probably thinner and more easily brushed away. This is an advantage only in settling finer particles. The lightness of the air admits of a higher number of pulsions per minute than with water, and this has to be taken advantage of in order to bring up the capacity to that of a hydraulic jig, working upon similar material.

§ 582. DISADVANTAGES OF AIR AS COMPARED WITH WATER. — Air and water may be said to be between the extremes, namely, a vacuum where density equals 0, in which quartz and galena settle at the same rate, at one end of the series, and a heavy solution of the same specific gravity as quartz, in which the quartz will fail to settle at all, at the other end. The proportional rates of settling are expressed by Table 114. They are calculated according to Rittinger's formula for rates of settling in mediums of different densities,

which is the best formula known to-day for larger sizes of grain, and gives results sufficiently accurate for this purpose.

TABLE 114. — RATES OF SETTLING IN DIFFERENT MEDIUMS.

Density of Medium.	Proportional Velocities of Settling of Particles of Equal Diameter.	
	Quartz.	Galena.
0 (vacuum)	1	1
0.00125 (air)	1	2.88
1 (water)	1	4.06
2.67 (heavy solution)	0	Infinity.

It will be further noticed that the figures in the galena column of Table 114 are also the free-settling ratios between the diameters of galena and quartz particles which are equal settling in the different mediums. The separation in the heavy solution is obviously very easy, while in vacuum no separation takes place. The settling ratio of quartz and galena in water, which is nearer to the heavy solution, is much more favorable than in air, which is further removed.

Owing to the higher friction of particles settling in water and also the higher specific gravity of water, which gives greater buoyancy, the velocity of current need not be so great as with air. In other words the effect of density in water is equivalent to the effect of velocity in air.

In water concentration graded crushing is advantageous, since the coarser sizes and the dust are easily treated; the reverse is true in the use of air, which cannot be used with coarse sizes, and the fine crushing makes much dust which cannot be as well treated as by water.

With water, the film surface treatment is a natural method of separation. With air, it is a difficult method and hard to control; in fact, only one machine using this idea is known to the author.

Water disintegrates clayey matter and dissolves soluble salts, freeing the particles cemented by them. In both cases the particles are left free for individual treatment. Air effects neither of these results.

Air requires that the whole batch should be made perfectly dry at the start, which may be a costly operation. Water concentration at most requires only that the concentrates should be dried preparatory to shipping them.

Fine, dry particles adhere to coarser grains more or less and may contaminate the waste product with rich mineral or lower the value of the concentrates with poor mineral. This adhesion may or may not be caused by electricity. Reasoning from what takes place in some of the manufactories, analogy would seem to point to it as the cause. In the case of coal there are several records of cases where the dry method, by blowing air, gave less adhering dust than the water concentration.

Since air jigs are all pulsion jigs, not using suction at all, and since the diameter ratio for quartz and galena, for example, when setting freely in the air, is less than in water, it follows that the feed to air jigs should be more closely sized than for hydraulic jigs, and this sizing will of necessity reach much finer sizes. A probable reason for the absence of suction is the greater clearance loss between pulsion and suction in air, which is due to the elasticity of the air, and which does not exist in water.

Since air diffuses, while water seeks its own level, the air is robbed of one of the principles which helps the hydraulic jig to be self-regulating. Since a hydraulic jig can have upon its sieve a bed of mineral which permits grains that rightly belong in the hutch to go there, and causes grains that belong

in the tailings to be held up and sent there, while the air jig cannot have a bed acting in that way, the air jig loses a second important means of being made self-regulating.

FLOTATION AND ADHESION.

§ 583. The following minerals, under certain conditions, may be separated from their gangue by bringing to their aid either the selective action of certain oils with acids or by the surface tension of water: Molybdenite, stibnite, galena, mixed zinc-lead sulphides, chalcocite, sphalerite, pyrite, chalcopyrite, bornite, graphite, tetrahedrite, argentite, cinnabar, tellurides, sulphur, and metallic gold, silver, and copper. Specific gravity does not directly affect the separation, as chalcopyrite may be separated from magnetite and heavy spar, probably also from sphalerite by oil, as indeed bornite from garnet; chalcopyrite from siderite; galena and sphalerite from barite; copper sulphides from cassiterite; copper, lead, and zinc minerals from heavy gangues. Some of these separations are practically impossible by the ordinary wet methods. It should be noted that the most easily floated minerals (molybdenite, stibnite, etc.) are the most greasy of the sulphides, *i.e.*, they are wetted with difficulty. Often the process will not work successfully unless some carbonate, such as rhodochrosite or siderite, is present in the ore.

§ 584. THEORY OF FLOTATION PROCESSES. — Some investigators claim that flotation is the result of the action of the acids on rhodochrosite or siderite in the ore, thereby liberating bubbles of CO_2 which attach themselves to the sulphide particles and lift them to the surface where they are caught by the oil or otherwise. It has been proved that the CO_2 is evolved from the minerals mentioned and not from calcite as might be supposed, and it has furthermore been stated that siderite and rhodochrosite are the only carbonates which give flotation with a true coherent scum. Precipitated manganous carbonates and ferrous carbonate, although easily decomposed, do not give flotation. In any case flotation does not take place at all until the temperature of the solution approaches the boiling point. At this temperature when a gas bubble comes into contact with a mineral particle so as to cause a relatively large surface of the gas to be in contact with it, the particle will be floated, and the less the wetting the greater will be the force required to detach the bubble, while, if the surface of the particle is wetted, the bubble has no attachment at all. This CO_2 is not derived from carbonates occurring on the surface of the mineral particles.

Others have come to the conclusion that the effect of flotation is due to capillarity, and by their theory explain why the sulphides are selected by the gas and why the temperature is of so much importance. Supposing a particle has no adhesion, *i.e.*, is not capable of being wetted. The surface tension of the liquid will cause it to surround the particle as closely as possible and we have a gas bell with a particle inside it. Adhesion, however, tends to wet the particles and this tendency continues until finally the whole grain becomes wet and the gas bell is detached. In order that the particle should float, the gas bell must not become detached, and the adhesion must be minimized, which is accomplished by increasing the temperature, whereupon the adhesion is destroyed. The difference of adhesion of various minerals to dilute acid is considerable. Thus galena is more difficult to wet than silica, and so on; and *those ores alone can be concentrated by flotation* whose valuable constituent is some greasy sulphide as galena or, at most, so automatically attached to the greasy sulphide that it comes off with it.

Whatever the cause may be, it has been found that the particles are floated perfectly after every precaution has been taken to remove all the air by exhaust-

ing with a vacuum pump and other means which would seem to disprove the last mentioned theory.

§ 585. Elmore Vacuum Process. — The Elmore oil process of concentration is based upon the selective action of oil on certain minerals. It also employs reduced pressure to increase, by expansion, the lifting power of gas bubbles in a liquid medium.

If a flowing pulp of crushed ore and water be agitated with oil, the latter has a selective action for metallic mineral particles over the gangue. This selective action is increased in certain cases by the addition of an acid to prevent the oil from sticking to the quartz gangue, and by reduction of the pressure below that of the atmosphere. In some cases the addition of acid liberates gas bubbles which attach themselves to the heavy mineral particles, and being largely increased in volume as a result of the lowering of the pressure, they are sufficient to carry the greased particles to the surface. The particles of gangue are not similarly affected, hence a separation between them is possible.

The concentrates are separated from the oil by means of a centrifugal machine. The latter extracts a large percentage of the oil present, and the small percentage left does not interfere with the smelting. The tailings are fed to a second separator where two products are made, concentrates and tailings. These resulting tailings are re-treated in separators as long as the resulting values obtained pay for the work.

The separators are usually built in 5-foot units which are wholly automatic and continuous in operation and consist essentially of a mixer and a separator. No expensive foundations are required, as there is no vibration. The capacity of the device varies with the character and size of the ore, but an average figure is 40 tons in 24 hours on ore crushed through 30 mesh. Two and one-half horse-power is required to operate it. No sizing or classifying is necessary, much better work being done on a natural or mixed feed. The consistency of the feed is about 5 tons of water per ton of ore, and the amount of oil per ton treated varies from 3 to 10 pounds. The oil preferred is "residuum" (0.89 specific gravity) and this costs from 2 to 17 cents per gallon. If the oil is too thin it can be thickened with mineral butter, and if too thick it can be thinned by lighter oil. The temperature preferred for treatment is 54° to 57° F., although sometimes heating with steam increases the extraction.

The cost is that of crushing to 30 mesh with the cost of oil lost and the running of mixers and centrifugal machines.

The advantages are: It has a smaller consumption of water than the wet methods; it yields cleaner heads and tailings than most wet processes; it separates some ores that cannot be otherwise separated. The disadvantages are: It requires careful selection of the quality of oil, which will vary somewhat with the temperature, adjustment of the quantity of oil and water, and of the point of feeding the same into the mixer. Oxidized or tarnished ore or tailings will require to be re-broken to expose fresh, bright surfaces before treatment with oil.

§ 586. Cattermole or Minerals Separation Company Process. — In this process the pulp, which is about 3 parts of ore to 10 parts of water and to which is added about 1 pound of oleine and from 10 to 15 pounds of sulphuric acid per ton of ore, is thoroughly agitated, mixed, and aerated in passing through mixing vats. Steam coils in these vats also raise the temperature of the pulp to about 120° Fahrenheit.

The regular introduction of fine slimes with the feed is said to be an important factor in the success of the process. The effect of aeration, under suitable conditions, is manifested by granulation of the metallic sulphides, so that, when the granulated pulp passes from the mixing vats into the spitzkasten, flotation of the sulphides is at once effected; and, while the gangue sinks and is drawn

off at the spigot, to be re-treated on other spitzkasten, the sulphides form a scum on the surface of the liquor and, since the inflow is greater than the spigot outflow, are recovered in the overflow.

§ 587. POTTER AND DELPRAT PROCESSES. — The Potter and Delprat processes are essentially alike and will be described together. Potter uses a dilute sulphuric acid bath, while Delprat uses sodium chloride and sulphuric acid. (Originally salt cake, sodium acid sulphate.)

The ore, after being finely crushed, is charged into an acidulated bath of water contained in a vessel similar to an ordinary spitkasten. The action of the pulp is the reverse of what ordinarily happens in a spitzkasten, *i.e.*, the heavy sulphides rise and pass off with the overflow, while the light gangue minerals sink and are drawn off at the bottom. This result is obtained by means of the acid acting upon the minerals so as to evolve a gas, mainly CO_2, the bubbles of which selectively attach themselves to certain minerals of the ore (sulphides), thus causing them to rise to the surface and form a scum, which is readily removable, enabling a separation to be made.

The acid in the water amounts, commonly, to 2% and, as salt is added, the solution is usually brought up 1.4 specific gravity. A densified bath appears to be of doubtful advantage and it is well to note that a bath necessarily becomes densified after using, due to the introduction of iron and manganese salts and other impurities. The temperature at which the best results are obtained is about 80° Centigrade.

As the process is very delicate, care must be taken not to vibrate the solution so as to destroy the adhesion of the gas and cause the particles to sink to the bottom. The fact that the adhesion may be so destroyed is made use of by allowing the overflow of concentrates to drop into the collecting tanks as they overflow from the spitzkasten.

The processes are comparatively cheap. One man tends six separators. His duties are merely to see that the scum is floating off regularly and that the tailings discharge does not clog up. The rise of the scum is very rapid and it accumulates in a dense mass about 1.5 inches thick. Holes in the scum indicate irregular working. The consumption of acid is from 30 to 35 pounds (computed as 100% H_2SO_4) per long ton of ore. The solution loses about 30° F. in circuit. The pumping and re-heating of the solution, acid, and labor constitute the chief items of expense. The total cost of Broken Hill, including transportation from tailings pile to flotation plant, is only about 50 cents per long ton.

Slimes have not been successfully treated thus far. The difficulty is because of mechanical entanglement of the rising particles and the finer slimes which fail to settle fast enough, a dirty low-grade scum resulting.

Experiments seem to show that there must be a certain ratio between the floatable and non-floatable materials. In some cases, sphalerite which alone would not float became buoyant upon adding a certain proportion of quartz, while in other cases ores, which alone gave good results, failed almost completely upon adding a large amount of sand.

§ 588. THE DEBAVAY FLOTATION PROCESS. — The principle of the DeBavay process is to gasify the crushed ore or pulp with carbon dioxide gas obtained from ordinary flue gas. The gasified ore is then spread in a thin sheet upon a water-film table whereon the flotation is effected. The ore should be ground to pass a 40-mesh screen and the fines under 80-mesh should be removed. The plant required in connection with this process is more extensive than that used in connection with either the Potter or Delprat processes, and its operation lacks the simplicity of these, wherefore its cost per ton is likely to be greater. This process is more delicate than the others, as a result of which galena is

floated to less extent. In some cases this may be a drawback, but it is a distinct advantage in many cases as it produces a higher grade zinc concentrates.

§ 589. MACQUISTEN'S FLOTATION METHOD. — *Coates Tube.* A. P. S. Macquisten's method uses no chemical or physical agents, subjects the ore to no preliminary treatment (except fine crushing), but simply causes sulphide minerals to float on the water surface while quartz and other gangue minerals sink to the bottom.

The principle which this machine utilizes is based on the different affinities exhibited by the various constituents of sulphide ores to the surface tension of water. Sulphide minerals are affected positively by the surface tension of the water, that is, they do not penetrate the surface easily, but tend to remain on the surface, while rock constituents are affected by it negatively, that is, they break through the surface easily and sink through the water.

It is believed that the flotation of the sulphide minerals is due to some superficial property which prevents them from becoming wet, while gangue minerals do not possess this property and readily sink. Practically it is found that only those sulphides of a "greasy" character are capable of being floated. These sulphides can, moreover, be floated even after prolonged and repeated immersions in water.

It is obvious that the process depends upon a delicate balance of small forces. The particles of ore, in order to be floated, must be small in size so that their weight shall not cause them to overcome the surface tension of the water. They must be brought very carefully upon the surface of the water so that the gangue, or easily wetted portion, may sink and the sulphides which are not readily wetted may float off. The angle at which the mineral particles are presented to the surface of the water must be just right in order to insure the maximum flotation. The thickness of the pulp and speed of its delivery to the apparatus for flotation are important considerations.

In operation the pulp is brought into a cast-iron tube, 6 feet long by 1 foot in diameter, called a "Coates Tube," which is about one-half full of water and is rotated at 30 revolutions per minute in a direction corresponding to the helix of the interior. The pulp is thus screwed through the tube and in its advance is repeatedly given an opportunity to slide upon the surface of the water. Once this has been effected the mineral remains on the water until the latter has overflowed into a launder which spouts it into the concentrates collecting tank. The capacity of a single tube is 5 tons per 24 hours.

One drawback of this process is its unsuccessful treatment of the slimes. The small particles do not settle rapidly enough, and pass over the weir into the concentrates tank. Thus far it has been impossible to make more than a two-mineral separation, that is, sulphides from gangue.

§ 590. ADHESION. — At the DeBeers Diamond Dressing Works, in South Africa, a special method has been devised to extract the diamonds from the final jig concentrates (of which the diamonds constitute about 2%). The machine used is a light side-shaking table, covered with a particular kind of grease, to which the diamonds adhere while all the other minerals are washed into the discharge. When the grease is removed and melted the diamonds sink to the bottom of the vessel. This method is intended to displace hand picking.

Adhesion also serves to catch and retain gold upon amalgamated plates as taken up in Chapter V.

DISINTEGRATING AND SCREENING.

§ 591. Ores may contain certain minerals of such different friability that a fair separation can be made by careful crushing in connection with screening.

Up to the last year or two methods of dressing molybdenite were confined solely to hand picking the ore, but lately a method of separation has been evolved which depends upon the fact that when the ore is passed through rolls, the molybdenite does not become pulverized, but is liberated in flakes while the gangue is crushed. The mineral and gangue in this condition are easily separated by screening.

Tests made upon low-grade telluride ores from the Cripple Creek district of Colorado show a considerable concentration of values by simple crushing and sizing. This is accounted for by the fact that most of the telluride gold values are deposited on cleavage planes, and, in crushing, these faces are first exposed and ground to fines which may be removed by screening.

DECREPITATION AND SCREENING.

§ 592. Certain crystallized minerals, such as calcite, barite, and fluorite and even pyrite, decrepitate (fly to pieces) to a remarkable extent when heated, while other minerals (especially the amorphous varieties, including sphalerite) do not have this property. Consequently careful heating in connection with screening may serve to make a separation of minerals whose specific gravities are so near each other as to render separation in the ordinary way difficult or impossible. Even crystalline barite and sphalerite have been separated, the barite decrepitating at a lower temperature than blende.

ROASTING FOR POROSITY.

§ 593. Some minerals, such as pyrite, become porous on roasting. Their virtual specific gravity (that is, the specific gravity of the porous mass) is thereby decreased sufficiently for separations previously impossible. The two most common examples are the separation of arsenopyrite and pyrite from cassiterite, and the separation of pyrite from sphalerite. In the Cornish "tin" concentration works, the concentrates, consisting of cassiterite, arsenopyrite, pyrite, and wolframite, are roasted in revolving furnaces to change the dense sulphides into the light and porous oxides, which are then washed away.

CENTRIFUGAL SEPARATION.

§ 594. Centrifugal force attracts the attention of the ore dresser along several different lines.

The formulæ for centrifugal force are

$$F = \frac{W V^2}{g R} = 0.000341 \times WRN^2$$

$$V = \frac{2 \pi RN}{60}$$

where F = centrifugal force in pounds, W = weight in pounds, V = peripheral velocity in feet per second, $G = 32.2$, R = radius in feet, and N = revolutions per minute.

If water in a cylinder be rotated rapidly around the axis of the cylinder, falling particles of mineral matter will be thrown toward the walls by centrifugal force. Of two particles of the same size but of different specific gravity the heavier will move more rapidly toward the wall; of two particles of the same specific gravity but of different diameters the larger will move more rapidly toward the wall. The following idea which may offer suggestion in some design is added here: under ordinary conditions a cubic centimeter of water weighs 1 gram, a cubic centimeter of quartz 2.65 grams, and of copper 8.2 grams. The cubic centimeter of copper therefore weighs 5.55 grams

more than that of quartz. If these substances were all put in a centrifugal machine and revolved with sufficient force to make the cubic centimeter of water have a virtual weight of 100 grams, then the quartz would weigh 265 grams and the copper 820 grams, or the copper would now weigh 555 grams more than the quartz. The author thinks that as the ratios are all maintained the conditions of separation remain not greatly changed from free-settling conditions.

The application which seems most attractive for ore separation is that of the modern cream separator, and a machine using this principle is employed to separate the oil from the concentrates in the Elmore Oil Process. Another application of centrifugal force to ore dressing is used in the pneumatic concentrator described in § 576.

WEATHERING.

§ 595. Some rocks disintegrate quite rapidly on exposure to the weather, notably those of a clayey or marly character, and certain altered volcanic rocks. Frequent frosts and either the absorption or evaporation of water are especially active causes of this weathering. The "blue ground" in which are found the diamonds of Kimberly, South Africa, is an altered peridotite. After mining, it is spread out about 10 inches deep on immense "floors" which are simply open ground cleared of grass, brush, and loose stones. The first treatment consists in running harrows back and forth between two traction engines placed several hundred yards apart. Most of the lumps, which at first are compact, gradually disintegrate and fall to pieces. After a certain period the most refractory lumps are collected and taken to the dressing works to be crushed, sized, jigged, etc. What remains on the floors is then harrowed again, and, if there has not been enough rain, the rock is wetted by hose, there being a complete system of pipes for this purpose. After another period of weathering the rock is shipped to the dressing works. The time required to weather the rock varies from three months to a year or more, depending on the season and on the mine from which it comes.

PART IV.

ACCESSORY APPARATUS.

CHAPTER XV.

ACCESSORY APPARATUS.

Under this head are described machines and apparatus that form connecting links between the different machines of a mill; and also those that control speed of running and value of products. They are: bins, samplers, feeders, distributors, water regulators, conveyors, elevators, pumps, launders, unwaterers, driers, etc.

Bins and Receiving Floors.

§ 596. The varying production of ore in a mine calls for receiving bins or floors at the mill, large enough to serve for storage when the mine is producing faster than the mill can treat, and thus provide ore for the mill when none is being received from the mine. It often happens that mining or milling is done for 24 hours, while hoisting or shipping is done for only 12 hours. A common rule for the size of bins is that they shall hold at least 24 hours' production of the mine, and they are often much larger. Custom mills, which treat ores from a number of mines, returning the concentrates and receiving pay for the work done, require more storage room than others, and must have separate bins for individual lots.

Ore bins must be strongly constructed and braced in order to support their heavy loads and to withstand the shocks due to dumping the ore into them. They may have flat bottoms where economy in first cost requires it, or where increased capacity is sought. These, however, require more labor to completely discharge the ore than do sloping bottoms. The sloping is made by laying timbers down the slope; and then boards are laid across the timbers, or else stringers are laid across the timbers, and the boards are laid down the slope on the stringers. In either case there should be a second layer of boards breaking joints with the first, to make the bottom tight. The bottom will wear better when the grain of the wood runs down the slope than when it runs across. Bins should be lined with plate iron where the ore strikes when it is dumped in.

The labor required for discharging a bin depends upon its shape. In some mills the bins slope in three directions to a chute in front. Sometimes bins are made with hopper bottoms and discharge by a chute to a conveyor belt placed underneath. Bins sloping in but one direction and flat bins cannot be completely discharged without shoveling. The discharge from the bins is usually regulated by a rack and pinion operated gate. Intermediate bins are very frequently used in mills so that a stoppage in one part of the mill does not necessitate a complete shut-down. These bins in wet mills are often constructed of plank with no attempt to make tight joints, and lined on the inside with burlap through which the water can percolate, leaving the ore behind. These bins are much used where a product is made that requires further and different treatment as for instance an iron-zinc product from tables or jigs that is to be subjected to roasting and magnetic separation. Bins for storing concentrates are often provided with steam coils which serve to dry the concentrates and prevent them from freezing in the bins in winter.

Samplers.

§ 597. Sampling consists in obtaining, from a lot of ore, a small portion to weigh out for assay, which shall represent as perfectly as possible the exact proportions of the constituents in the original batch of ore. This involves two operations which proceed by alternate stages: (1) cutting down or reducing the weight of the sample, and (2) crushing or reducing the size of the particles.

Sampling and assaying are required in milling to determine the value of the ore; to see what losses are taking place in the tailings, and what is the quality of the middlings; and to determine the value of the concentrates. Consequently the selection of the proper methods of sampling is very important. This work must be so conducted as not to lose dust or fine slimes which belong to the ore or product, as these fine particles are often very rich, and a larger error would be made by their loss than the loss of weight alone would imply.

A sample may be taken from a stream of ore while it is in passage from one place to another, in which case it is called a running sample; or it may be taken from a car load lot or an accumulated product. A running sample is taken either by hand or machine; but in most other cases only hand methods are used.

§ 598. Difficulties Attending Sampling. — The most difficult ores to sample are those in which precious metal values occur as native metal or in small quantities of very high-grade material carried in a barren gangue. When the native metal or high-grade mineral occurs in large masses or crystals, the difficulty of obtaining concordant results is much greater than when the values are finely disseminated through the mass of the ore. Of such ores the most difficult to sample correctly are those which show the greatest contrast between the assay values of their largest particles. In this class belongs also any ore which, as received at the sampling works, may not show greatly contrasting values in its largest particles, but which, after a varying fineness of crushing, shows extreme variations. Such an ore frequently contains extremely rich particles which crack off as crushing proceeds, giving at some point a product consisting of equally sized particles of nearly pure gold and barren rock. If a sufficiently large sample is not taken, even after such an ore has been crushed to 8 or 10 mesh, it may easily happen that two samples will vary by 10, 20, or even a greater percentage.

§ 599. Requisites to Accuracy. — The first requisite to accuracy in sampling is that the sample and reject shall be uniform in composition at each stage in the process of division. This necessitates perfect mixing, accurate division, and thorough cleanliness during the entire operation. Between each cutting down of the sample, the sample should be re-crushed sufficiently so that the ratio of the diameter of the largest particles to the weight of the sample to be taken shall not exceed a certain safe proportion. On the supposition that the mixing and division of the ore are carried on so perfectly as to realize the above conditions, the possible limit of error in each case is the ratio between the weights of the sample and the weight of the coarsest high-grade particle contained therein. This is evident from the fact that no amount of mixing and careful division can make the sample and reject alike in value when the lot before division contains an uneven number of large high-grade ore particles.

§ 600. Hand Sampling is done in various ways, which will now be noted.

Fractional Selection by Shovel. — When ore is being moved by a shovel, either to load or unload it, every fifth, tenth, or twentieth shovelful, according to the richness of the ore and the distribution of the minerals, may be thrown one side for a sample. Similarly, when unloading ore in sacks, every fifth or tenth sack may be set aside. This sample, after being crushed to reduce the size of lumps, may again be reduced in quantity by setting aside alternate

shovelfuls as a sample. This routine may be repeated several times until the sample needs crushing again, but a smaller shovel must be used when its capacity becomes too large a proportion of the lot.

Quartering. — The crushed ore, when brought to the sampling floor in sacks or barrows, is deposited evenly in a large ring. The attendant then shovels it into a conical heap in the center, while walking slowly around the ring. He should not shovel too much ore in passing once around, lest a part of the ore be too much bunched. Every shovelful should drop systematically upon the apex of the cone, all sides of the cone thus receiving contributions from each shovelful of ore. The ore is now raked out into a new ring by a shovel or hoe and re-coned, or it may be directly shoveled into a new cone on another part of the floor. This process of re-coning will be repeated until the batch is satisfactorily mixed, and then the cone is systematically flattened by raking the ore out from the apex, while walking around it. The flattened cone is marked off into quarters, with a stick or board on edge, along two diameters at right angles to each other. Two opposite quarters are shoveled away for the sample, taking care to save all the fine as well as coarse ore belonging to the samples; and if the lumps are small enough, it may be mixed as before and again cut down.

If there is much variation in the sizes of the ore particles, as there is very likely to be, the fine tends to separate from the coarse, and thereby prevent thorough mixing. This separation is much lessened when the ore is somewhat damp, but the moisture must not be sufficient to make the ore ball up into large masses. The floor on which this work is done must be clean, smooth, and free from cracks; hence it is best to have it covered with iron or steel plates.

Fractional Selection by Split Shovel, Riffle, and Jones Sampler. — The split shovel is a fork in which the prongs are separate scoops, each scoop being the same as the space between the scoops. It is laid upon the ground, and a shovelful of ore spread over its surface, the shovel being moved back and forth across the scoops while the ore is sliding off. The split shovel is now lifted, leaving on the floor the ore that went into the spaces between the scoops, and what went into the scoops is emptied on a heap by itself. The riffle is the same thing, except that it is larger and has a small handle on each side instead of a shovel handle on one side. It is used in the same way as the shovel. The riffle or shovel is very useful in the assay office when the quantities become small and the sizes fine. The Jones sampler is a riffle consisting of two sets of scoops sloping in opposite directions, instead of alternate scoops and spaces. The scoops discharge the ore as fast as it is poured into them, the even numbers to one side, the odd numbers to the other. For either of these devices, each scoop should be at least four times as wide as the largest particle of ore.

Beside these methods we have pipe samples, grab samples, etc. Pipe sampling consists in driving a cheese scoop sampler or pipe into the ore in the bins, sacks, or cars that are being sampled, and in this way removing a portion of the ore for a sample. Grab samples are taken by dividing the surface of the ore pile into squares and taking as a sample approximately equal quantities of ore from the corners of the squares. Running samples of the products coming from individual machines or of the general mill tailings are sometimes taken by a dipper, bucket, or similar arrangement, the whole stream being taken for some definite period, say 30 seconds at definite intervals, as once in every fifteen minutes.

§ 601. MOISTURE SAMPLES. — Since the assays of ore are always made upon dry samples (because a constant weight and value can be obtained in no other way), and since all ores are more or less damp when sampled, it is

necessary to take moisture samples to determine the weight of dry ore in any lot. This moisture sample should be taken either just before or just after the ore is weighed. It must be taken by a method that is rapid and does not require crushing, further cutting down, or other handling before testing; and should therefore be independent of the regular sample, unless the latter is small enough so that the whole of it can conveniently be dried. Each portion taken for the sample must be put into a covered pail immediately, so that there shall be no evaporation before the test is made. As soon as possible the sample is rapidly mixed, and a portion weighed out to be dried; or better, the whole sample may be dried. The difference between the wet and dry weights, divided by the wet weight, gives the percentage of moisture in the wet ore.

§ 602. MECHANICAL SAMPLING. — There are seven essential features of a perfect mechanical sampler: (1) it must take the whole stream of ore (wet or dry) part of the time, and not part of the stream all the time, because the values are never evenly distributed across the stream; (2) the scoop that cuts out the sample must move completely across and out of the stream in one direction at each cut, for, if it enters from one side, and is then withdrawn on the same side without having completely crossed the stream, more ore will be taken from the side at which the scoop enters and leaves than from the other side;[1] (3) in order to take equal proportions from all parts of the stream, the scoop must move at a uniform rate, and the top of the scoop must, in all positions, be at right angles to the direction of the stream. This last condition, in the case of a revolving scoop, is well obtained from a vertical stream and a horizontal scoop; (4) if the scoop that cuts out the sample revolves about an axis, two sides of the scoop should converge toward the axis in order to take equal proportions from all parts of the stream; and the scoop may be adjustable to take larger or smaller proportions of the ore; (5) the interval of time between cuts should be constant; (6) the scoops must be deep and broad enough so that ore that has once gotten into them will not bound out again; and if the scoops have closed bottoms they must not be allowed to fill up so that some of the ore runs over, as this would produce a concentration of the heavy minerals, especially when the ore was carried in running water; (7) the machine should be simple and easily accessible for cleaning, to avoid danger of contaminating subsequent samples. For the best results the feed to the machine should be regular.

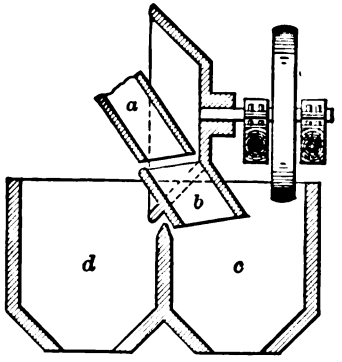

FIG. 251. — SNYDER SAMPLER.

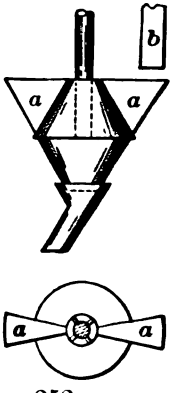

FIG. 252. — VEZIN SAMPLER.

§ 603. THE SNYDER SAMPLER (Fig. 251) has the form of a circular pan with flaring sides, which is set edgewise on a revolving horizontal shaft. A spout, *b*, projecting through the flaring side, passes under the feed spout, *a*, at each revolution of the machine and delivers a sample into the sample spout *c*. During the rest of the revolution the material is diverted into the spout *d*.

§ 604. THE VEZIN SAMPLER (Fig. 252) has two hollow, truncated cones

[1] Though such a scoop may take only part of the stream at a given instant, it does take a true section across the stream and virtually takes the whole stream part of the time.

bolted together at their large bases. They are attached to a cast-iron spider, which is keyed to a vertical shaft. This shaft is supported by a collar at the upper end, is held in place by two guide boxes, and is driven at a constant speed in one direction by beveled gears at the upper end. The upper cone carries one or more scoops, *a*, the openings of which have the form of sectors of a circle. The ore is fed from the spout *b*; and the portion that enters the scoops passes into the interior of the cones, and is conducted to the sample bin, or to the rolls if it is to be further crushed. The main portion of the ore falls into a hopper and is spouted to storage bins or cars.

§ 605. IN THE BRUNTON SAMPLER (Fig. 253) the deflector *ab* is carried on the horizontal shaft *c*, and is given a forward and backward motion by means of the crank wheel, *d*, the connecting arm, *e*, and the lever, *f*. The end of the feed spout is brought down near the oppositely sloping faces, *a* and *b*, of the deflector; and the latter oscillates far enough so that the scoop, *a*, cuts completely across the stream of falling ore. A sample is thus deflected to the left by the scoop *a*, and the rest of the ore is deflected to the right by *b*.

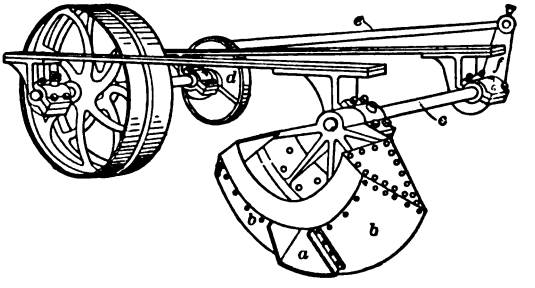

FIG. 253. — BRUNTON SAMPLER.

For the sake of simplicity the above machine is not made adjustable for varying the percentage of ore taken for a sample, but could easily be so made if it was desired. Either of them is applicable for the feed or for the products of any machine in a mill, or for the general tailings. Several machines are often used in series, the size of the ore being reduced between successive machines.

§ 606. COMPARISONS. — A good mechanical sampler has an advantage over hand sampling because it eliminates the possibility of intentional error. Moreover, it is in general cheaper. Fractional selection depends for its accuracy on the probability that there will be less error in taking many small quantities distributed through the lot than in taking a few large quantities; while the accuracy of quartering depends on thorough mixing, which requires careful attention to the precautions before mentioned. Quartering requires more labor than fractional selection, and is not practicable for very large lots, because it would require an excessive amount of space.

§ 607. SIZE OF SAMPLES. — When shovel sampling, the smallest sample that could be taken to represent 20, 40, and 60-ton lots depends largely upon the character of the mineral carrying the precious metal values. When the value-carrying mineral breaks up fine, it is obvious that a smaller sample will suffice than where the value-carrying mineral is as hard as the enclosing rock and is liable to be found in large pieces. Under the latter conditions nothing less than a 5-ton sample could be considered even approximately safe. On run of mine ore not less than 10, 20, and 30 tons respectively should be taken. If crushed to 2-inch cube, $\frac{1}{2}$, $\frac{1}{2}$, and $\frac{1}{3}$ of the total tonnage should be taken, with finer crushing before cutting down further. Table 115 gives the minimum weight of samples of various sizes, the ratio of the weight of the largest cube to the weight of the sample, and the effect upon the value caused by one cube assaying $100,000 per ton and having a specific gravity of 5.

Table 115 has special reference to gold ores. On silver ores one-tenth of the sample weight given in the table is considered sufficient.

TABLE 115. — SMALLEST PERMISSIBLE WEIGHT FOR SAMPLES OF GIVEN SIZE.

Size. Inches Cube or Mesh.	Weight of Sample. Pounds.	Ratio of Weight of Largest Cube to Weight of Sample.	Effect on Value Created by 1 Cube Assaying $100,000 a Ton, Specific Gravity 5.
2 Inches	10,000	1 to 7,000	$14.42
1½ "	5,000	1 " 8,300	12.17
1 Inch	2,000	1 " 11,000	9.00
¾ "	1,000	1 " 13,000	7.50
⅝ "	400	1 " 18,000	5.62
½ "	300	1 " 31,000	3.17
⅜ "	200	1 " 71,000	1.40
⅓ "	100	1 " 83,000	1.20
¼ "	75	1 " 220,000	0 44
6 Mesh	50	1 " 430,000	0.23
10 "	25	1 " 930,000	0.107
18 "	10	1 " 1,900,000	0.051
30 "	4	1 " 4,200,000	0.023
50 "	1	1 " 5,500,000	0.018

After going through the rock breaker and passing into the rolls, each successive set of rolls cannot be expected to reduce the diameter of the cubes to less than ½, or in other words, to ⅛ of their weight. Thus a 12½% sample would maintain the same number of ore particles as were in the original lot, but as there is a greater possibility of finding a piece of high-grade mineral in the small than in the large sizes, it is probably not safe to take less than 20% for a sample.

In shovel sampling it very often happens that when every fifth shovelful is taken from the sample, the sample does not finally weigh one-fifth as much as the original lot, and in fact varies more than 10% from so doing. This may be due to two causes and the question as to how the sample will be affected depends largely upon which of these two causes has brought about the discrepancy. If it is due merely to a mistake in counting, the sample is not necessarily invalidated thereby. If, however, the shoveler has taken a smaller shovelful when throwing into the sample bin than he has when throwing into the reject, the sample is thereby invalidated, since in shoveling from a pile there is usually more fine material on the point of the shovel than on the heel, and as a consequence a larger proportion of fine ore is obtained than of the coarse ore.

§ 608. LIMIT OF AUTOMATIC SAMPLING. — As the elimination of the personal element in sampling is always desirable, automatic sampling should be employed at every stage from the ore car to the sample sack wherever this is possible. The importance of greater care as to cleanliness with the necessarily smaller sample, and the loss on account of the fineness of the material, are the greatest drawbacks to mechanical sampling in the later stages; the point to which mechanical sampling should be carried depends upon the mechanical perfection of the devices employed, principally as regards the two points mentioned.

§ 609. The following points should always be borne in mind when sampling ores:

(1) Take out a sufficient amount in the first cut to accurately represent a thorough sample at that size. Where the ores are of low grade, or very uniform in composition, a small sample will suffice.

(2) Always crush and thoroughly mix the ore between each cut, unless it is already quite fine, and in this case the greatest possible care must be exercised in thoroughly mixing before making the second cut. The very essence of ore sampling is never to cut or reduce the ore a second time without first crushing to a degree of greater fineness. Example: Assume a lot of ore crushed to cubes of 1-inch size, and that 25% is necessary to give a correct sample at this size.

Now if this sample is reduced 55% without re-crushing, it simply amounts to taking out 12.6% in the first cut, which, with 1-inch cubes, we have found to be 50% too small to give a correct sample.

Mixing comes next in importance, more especially for spotted ores. When the sample is crushed in rolls and elevated to the cutter, the mixing is found to be sufficient, provided there is a steady feed to the rolls so that a uniform stream passes the cutters without intermission or break.

(3) Use riffles for reducing the size of samples after leaving the last automatic sampler.

Alternate shovel sampling is far more accurate, easy, and cheap than "coning and quartering." Suppose one has 10,000 pounds to be sampled. By alternating shovels the workman will make 1,000 cuts to halve the quantity as against two cuts by "coning and quartering." The disadvantages of "coning and quartering" are that the fine material always forms the apex of the cone while the coarse particles find their way towards the perimeter. It is well-nigh impossible to keep the cone truly vertical, and in this we have the first source of error. The next stage is leveling off the cone to form a cake of ore of uniform thickness and equal diameters at all points of the perimeter; and lastly, dividing the ore cake into quarters, taking opposite ones for samples, and rejecting the others. There are many sources of error in the method.

Automatic Feeders.

§ 610. Automatic Feeders are mechanical devices intended to avoid the necessity of hand feeding. When once set they should deliver the ore as nearly as possible at a definite rate (in pounds per minute), and they should be adjustable to feed fast or slow. In the case of a stamp battery the rate is automatically regulated by the action of the battery itself. The feeder should not concentrate the ore, delivering richer material at first and poorer later, or vice versa, but must deliver a uniform quality of material throughout. Clayey or other sticky ores cause difficulty with some feeders.

§ 611. Hendy's Challenge Feeder for gravity stamps, Fig. 254, consists of a circular table, *a*, inclined about 12½°, and slowly revolved by beveled gears beneath. A sheet iron hopper, *v*, delivers the ore on one side of this table, and a fixed scraper, *c*, is so arranged that when the ore reaches a certain point it is scraped into the stamp mortar. The quantity of ore delivered from the hopper to the table is regulated by an adjustable gate, *b*. The table stands upon a short inclined shaft and step, *d*. It has a beveled gear cast upon its under side. Power is brought to it by the pinion, *e*, the shaft, *f*, the friction pawls, *g*, the lever, *k*, the connecting rod, *m*, the lever, *n*, shaft, *o*, lever, *p*, and the buffer rod, *r*. A spring, *l*, returns the lever, *k*, to its place after each stroke, but the friction brake, *i*, prevents the shaft from turning back. The lever, *k*, is attached to the inner rim, *h'*, which is loose upon the shaft, *f*, and drives by friction the outer ends of the pawls, *g*. The inner ends of the pawls are attached to the shaft, *f*. When the ore level on the dies of the stamp battery is low enough, the tappet of the stamp strikes the buffer, *r*, and feeds more ore. The amount of each movement is limited by means of the hand screw, *s*, which is clamped in place by the lock nut, *t*. The feeder is sometimes used for other machines than stamps, and is then operated by a cam and spring acting on the lever, *k*, the amount of movement of the lever being adjusted by hand screw and lock nut; or it may be operated by an adjustable eccentric at the upper end of the rod, *m*, and in that case the spring, *l*, is thrown out of action. This machine feeds even clayey and sticky ores without much difficulty.

§ 612. The Gates Feeder (Fig. 255) consists of a stirrup, *a*, with curved bottom, hung by two supports, *b*, and oscillating beneath the chute, *c*, on top

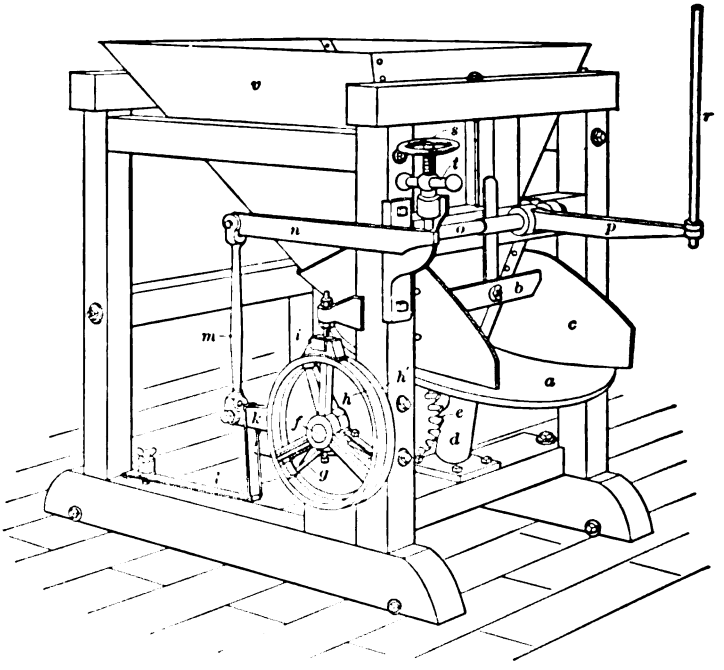

FIG. 254. — HENDY'S CHALLENGE ORE FEEDER.

of which the feed hopper is set. In the middle of the chute is a fixed cross partition, *d*, which nearly touches the stirrup, while the front and back sides of the chute approach only within two or three inches of it. The stirrup extends laterally far enough beyond the two sides of the chute to prevent the pressure of the ore above from discharging anything when the stirrup is not moving, but as the latter swings the central partition forces out a certain quantity of ore from each side alternately. At the point *e* the stirrup is connected by an arm to a crank pin, which is made adjustable to vary the rate of feed. This

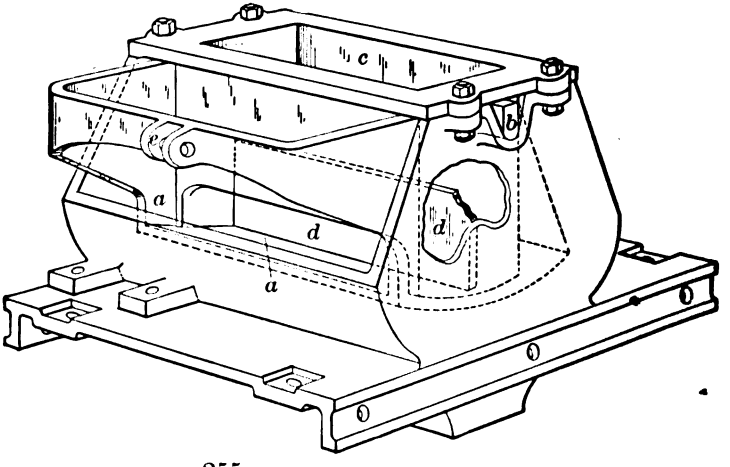

FIG. 255. — GATES ORE FEEDER.

feeder was especially designed for rolls, to be driven from the roll shaft; but is adapted to various other uses. A modification is applied to stamps, in which case it is driven by a buffer-rod, lever, and linkage. This form discharges only from the front, the back of the hopper coming down close to the stirrup, and forcing the ore out as the stirrup swings backward. The machine is said to successfully feed either sticky or granular ores.

There are numerous other forms of feeders which find application in the mills. For a description of these the student must be referred to Ore Dressing.

Distributors.

§ 613. Distributors are used for two purposes: to divide a stream of ore evenly between two or more machines (mill distribution); and to distribute the ore evenly to a single machine (machine distribution). The object of the first is to give each machine its proper amount and kind of work; the object of the second is to give the right amount of work to each part of a single machine.

§ 614. Mill Distributors. — For this purpose distributing boxes, distributing and sizing launders, and various forms of mechanical distributors are used. These have already been described in Chapter VIII.

§ 615. Machine Distributors. — A common method of distributing the spigot product of a classifier across the feed end of a jig is to let the material discharge on a sloping fan-shaped apron, the wide lower end of which is the same width as the jig screen. Various other forms of distributors have been noted under the descriptions of the various concentrating machines. The Edison distributor shown in Fig. 256 is used for distributing to a drier ore ½ inch in size and smaller.

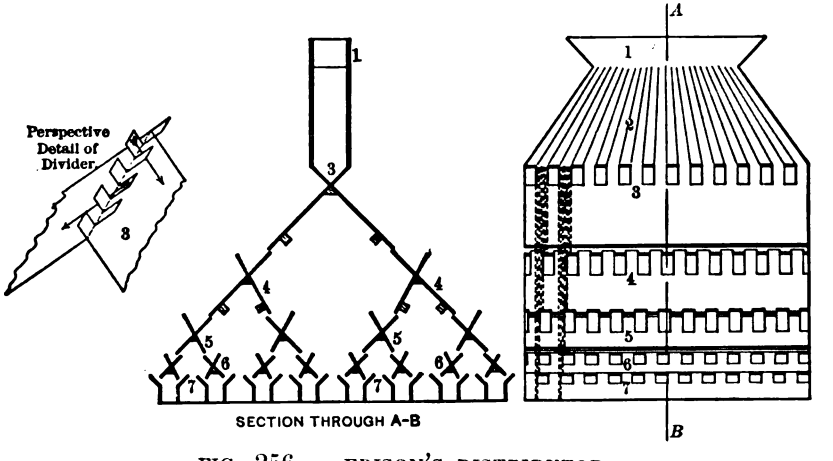

FIG. 256. — EDISON'S DISTRIBUTOR.

The ore being fed in quantity into the hopper, *l*, is divided into a number of streams by the diverging partitions, (2), at the bottom of which is the X-shaped divider, (3). Each of the upper arms of the X is a series of alternate dams and openings, each dam on one side being opposite a space on the other side; but the two lower arms of the X have no openings. The ore is thus divided into a number of streams, half of which go to the right and half to the left, and are discharged upon the two dividers, (4), the dams of which lap half way on the openings of the divider, (3). The same division of the ore continues through the

dividers (4), (5), (6), and (7), the result being that the ore is distributed in a large number of equal streams.

Water Regulators.

§ 616. It is important that water should be supplied to all the machines under a constant head. Without this it is impossible to regulate the supply to the machines. The best way to get a constant head is to have a larger supply tank which constantly overflows. Wherever several machines draw water from the same pipe, this pipe must be so large that the regulation of water on one machine affects only slightly the quantity supplied to the others. Strainers to remove sticks and other obstructions must be used on pumps lifting water to supply tanks, and it will often be necessary to use fine strainers on the pipes connecting the supply tanks with the machines where very close regulation of water is needed. The reader is referred to Trautwine's Civil Engineer's Pocketbook, and to Kent's Mechanical Engineer's Pocketbook, for rules and formulæ for planning pipes for mill work.

To get the right quantity of water on starting after a stop, dial cocks are very convenient. They have been adopted by several manufacturers for the cocks supplying hydraulic water to classifiers. Another method is the two-cock system: one cock is permanently set for a desired quantity of water, while the other is used to let on and shut off the water; in place of the first cock a pipe union with a perforated disc of metal may be used, the size of the hole in the disc being such that it will pass the quantity of water desired.

Appliances for Conveying and Elevating Ore and Water.

Ore or sand, with or without water, may be lifted and conveyed in a number of ways: by conveyors, bucket and platform elevators, sand wheels and pumps.

Conveyors.

§ 617. There are two chief classes of conveyors: 1st, those of the endless-belt type, which move forward with the product to be conveyed (for example; rubber belts, chain belts with pans, chain belts with buckets, chain scrapers moving in troughs); and 2d, those in which the product is moved by the propelling motion of a screw thread or by the jerking of an oscillating tube or trough. Those of the first class are used for conveying on an up grade as well as on a level or a down grade; those of the second only for level or down grade.

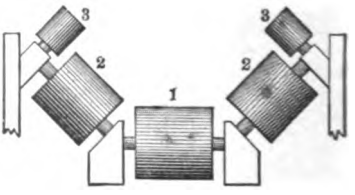

FIG. 257.

§ 618. Rubber Belt Conveyors, which are more commonly used than any other form, consist of endless belts running on two large pulleys or drums, and with intermediate supporting rollers. The belts have to be of special quality of rubber to withstand the wear, while cotton duck furnishes the strength. The greatest wear comes on the middle portion of the belt, and to overcome this the Robins belt has a thicker layer of rubber in the center.

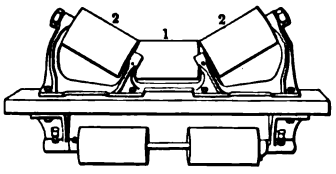

FIG. 258.

The design of the supporting and guiding rollers is important. There are several different designs: in the five-roller form (Robins, Fig. 257) (1) is the main supporting roller, (2), (2) give the belt a trough shape, and (3), (3) guide the belt. In the three-roller design (Jeffrey, Fig. 258), (1) supports the belt and gives it a trough form, while (2), (2) guide

the belt. With the single roller with skirt boards (Fig. 259) the ore is prevented from creeping off the edge by the skirt boards (1), (1), but the belt is apt to be cut by lumps that become wedged beneath the skirt boards. With the plain, single roller without skirt boards, the belt can carry only a thin layer of ore, and therefore the capacity is small compared with the other forms. In these last two forms the belt is guided by the end rollers, which are made crowning in the center. The supporting rollers are placed near together (4 to 6 feet apart, according to the amount of ore carried) to avoid sagging of the belt. The idlers beneath, for the return of the belt, may be twice as far apart as the upper set, and may be simple flat rollers, whatever the design of the upper set.

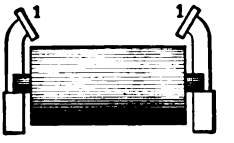

FIG. 259.

It is better to apply the power at the delivery end than at the receiving end, because in that case the tight part carries the ore. The pillow blocks of one of the end rollers should be adjustable by set screws, to take up slack in the belt. The driving pulley should be of sufficient diameter to transmit the power without slipping. In order to lessen the wear on the belt the ore should be delivered to it with as little drop and at as small an angle as possible, and should be moving forward with the same velocity as the belt. In several mills the ore from No. 1 breaker is separated by a screen, the fine falling upon the belt first, and so protecting it from the wearing action of the coarse lumps.

The Utah Copper Company uses a flat belt for horizontal or slightly inclined conveyors and maintains that it is more economical to purchase a wide enough belt to convey the load flat than to attempt to increase the capacity of a narrow belt by turning up its edges and introducing additional wearing parts by the turn-up idlers. The same company prefers flanged belts similar to the flange of vanner belts to turned-up belts where the inclination is steep (22°), and the rolling of the larger particles makes it necessary to take some precautions to prevent their getting off the belt. This flanged belt is 20 inches wide with a flange 1 inch high, which, being similar to that of a vanner belt, can be used with a tripper if desired. It handles 750 tons of ore per day, and is able to convey about 1,500,000 tons of material before being replaced. The first cost of such belt is about the same as that of a Robins belt, and the simple form of idler, and consequent fewer wearing parts, makes it preferable to a troughed belt.

Rubber belt conveyors usually discharge at one end, but sometimes the ore is discharged at any desired point along the side by fixing an oblique scraper at that point or by special trippers in which the belt moves up a short incline to a roller, then passes downward and backward, and around another roller, and again moves along in its normal direction. In making the reverse turn at the top the belt delivers its load into a side-discharging hopper. The tripper is so constructed as to move back and forth automatically, and thus distribute the ore in a long bin; but it may also be set to deliver all the ore at any one place.

Table 116 gives the maximum possible capacities of belt conveyors of different sizes running at different speeds. Belt conveyors run at speeds varying from 100 to 800 feet per minute They are usually run at lower capacity than the table would indicate.

The cost of handling materials by conveyor belts may be itemized as follows:

Horse-power per foot, per ton, if horizontal, $0.00015.
Horse-power per foot, per ton, if inclined, 0.001.

The cost of renewal of belts is $0.001 to $0.002 per ton for each time the ore is fed to a conveyor.

TABLE 116. — CAPACITIES OF BELT CONVEYORS IN TONS OF ORE PER HOUR

Width of Belt. Inches.	Velocity of Belt, Feet per Minute.								
	200	250	300	350	400	450	500	550	600
12	36	45	54	63	72	81	90	99	108
14	49.1	61.4	73.6	85.6	98	110.4	122.6	134.8	147.2
16	64	80	96	112	128	144	160	176	192
18	90	112.5	135	141.6	162	182.4	202	222	270
20	100	125	150	175	200	225.0	250	275	300
24	144	180	216	252	288	324	360	396	432
30	225.4	282	338	394	450	506	562	614	676
36	324	405	486	566	648	730	810	892	972

§ 619. PAN OR PLATE CONVEYORS consist of a series of steel pans or plates riveted or bolted to link belts. In some cases rollers are attached to the link pins, one on each side of each pan, to support the conveyor; in other cases the pans run upon stationary rollers. At each end of the conveyor the belts pass over polygonal sprocket wheels, and power is received through the one at the delivery end. Edison puts in an extra sprocket wheel near the end so as to drive by a direct pull. These sprocket wheels also serve to guide the belt. The pans have rectangular, flat bottoms, and may have sides flaring upward. If the conveyor has little or no slope the pans are open at the front and back, and the front edge laps on the rear edge of the preceding pan in order to prevent any ore from dropping through. If, however, the conveyor has an appreciable slope upward the pans have raised backs. When simple flat plates without raised sides are used, they require skirt boards along the sides to keep the ore from falling off.

§ 620. A SCRAPING CONVEYOR consists of a series of steel scrapers riveted or bolted to the links of an endless chain, and drawn along in a steel trough. In some cases rollers attached to the link pins run on a track and keep the scrapers off the bottom of the trough. In other cases the scrapers move along on the bottom.

§ 621. A BUCKET CONVEYOR consists of a series of steel buckets hung on trunnions between two parallel link belts in such a manner that the buckets remain upright in whatever direction they move. As the buckets move continuously they require special arrangements for filling, and they can be emptied at any point by automatic tipping arrangements. They are considerably used in coal storage plants.

§ 622. SCREW CONVEYORS are revolving shafts, horizontal or nearly so, with attached helical blades resembling screw threads which work in semi-circular troughs. They are sometimes used to convey comparatively fine dry ore. They are also used as feeding devices. The wear upon these conveyors is excessive and depreciation may amount to as much as 100% per year.

§ 623. PUSH CONVEYORS. — Figs. 260*a* and *b* show a push conveyor. In this conveyor the ore is pushed forward in a trough by a series of hoes hinged at intervals to a reciprocating ladder-like frame, composed of a pair of channel beams joined by suitable cross-bars and mounted upon rollers. This frame is actuated by a crank mechanism, which can be placed at any convenient point. The hoes or flights are so hinged that in their forward motion they bear against stops and push the material along, while in their backward motion they return to the starting point by dragging over the top of the material.

The push or reciprocating conveyor has the advantage that it can be fed and discharged at any point; it occupies less height than the chain scraper-conveyor and all its wearing parts are outside of the grit, save the flights themselves and the trough. It is uneconomical of power, owing to the frequency

with which the motion is reversed, and the fact that at every stroke the inertia of the entire lot of ore has to be overcome. This latter fact limits the length of the conveyor. Push conveyors are not suited for handling coarse material, and are considerably more expensive than scraper conveyors.

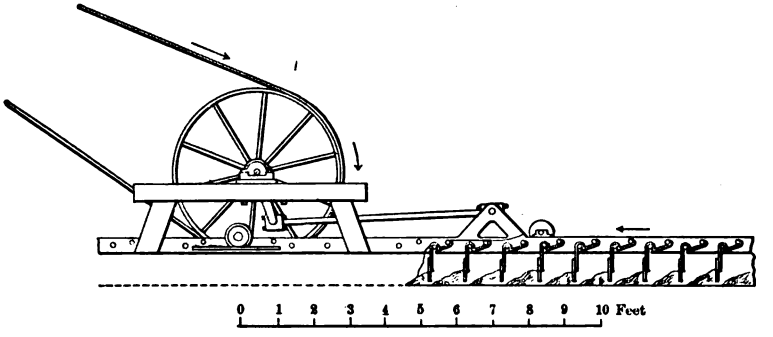

FIG. 260*a*. — PUSH CONVEYOR, FORWARD STROKE.

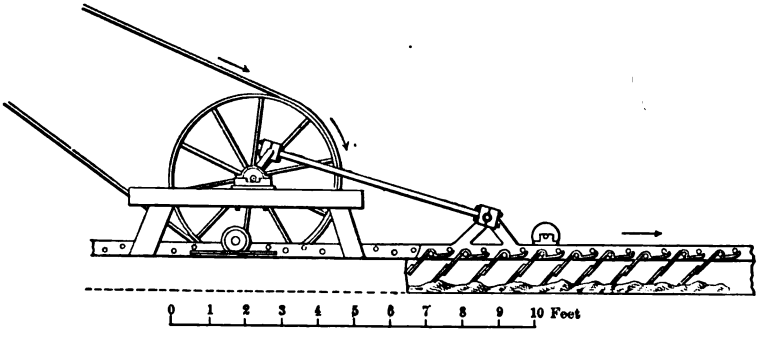

FIG. 260*b*. — PUSH CONVEYOR, BACKWARD STROKE.

A later form of reciprocating conveyor has a trough with bottom made in a serrated form. This trough is reciprocated and at each jerk the material goes over a ledge, and therefore attains a positive progressive movement.

§ 624. THE BLAISDELL SYSTEM OF MECHANICAL ORE HANDLING. — The Blaisdell Company has perfected a method for cyaniding sands and slimes mechanically. The wet pulp coming to the cyanide plant is discharged into a hopper suitably suspended over the sand-collecting vats. This hopper is free to revolve about a vertical axis and is provided with radial pipes having discharge spouts directed backward so that it rotates in the same manner as the reaction turbine. The radial pipes vary in length and thus bring about an even distribution of the pulp in the vats. The water and slimes contained in the pulp are discharged through suitable gates at the sides of the vat, leaving the sands. The central discharge opening is kept closed by a plug shown in Fig. 261 until the tank is filled, drained, and is ready to be excavated. The distributor is either supported on a swinging crane serving four vats, or is mounted on a bridge spanning a series of vats over

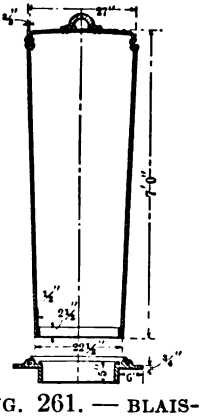

FIG. 261. — BLAISDELL TANK PLUG.

which it travels. When the collecting vat has been filled with sand and drained, the plug is removed and the excavator brought into play.

The excavator consists of a double-truss steel bridge (see Figs. 262*a*, *b* and *c*) supporting at its center a vertical steel shaft with four horizontal arms. The bridge is carried by wheels traveling on steel rails placed on either side of the vats and supported by independent structures. The central vertical members

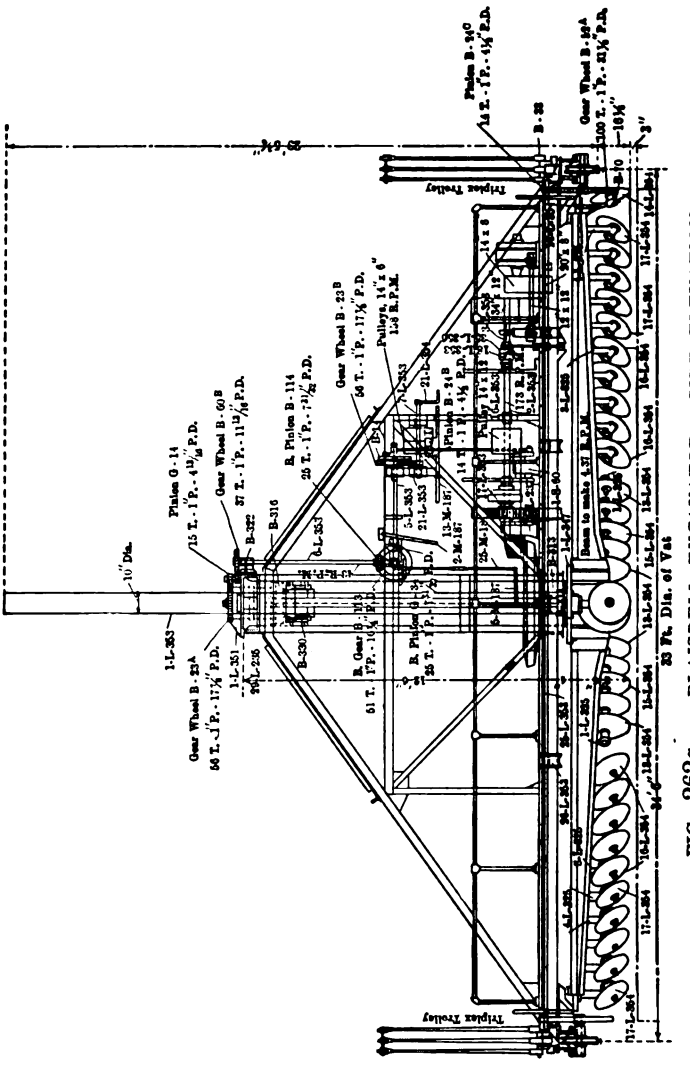

FIG. 262*a*. — BLAISDELL EXCAVATOR, SIDE ELEVATION.

of the bridge truss carry cross-head guides and screws for raising and lowering the cross-head. The latter carries the upper bearing of the main shaft and a thrust bearing running in oil supporting the weight of this shaft, excavator beams, and discs. The bridge floor carries a bearing in which rests a beveled gear splined to the main shaft. This revolves the main shaft. Under the arms are mounted discs which move the sand, when the shaft is revolved,

toward the center of the vat. This attachment is useful for aerating the sands when it is desirable to do so. When the sand is being removed from the sand-collecting vat, these discs move it toward the center where it falls through the central discharge opening upon one of a series of belt conveyors which deliver it to a centrifugal sand distributor. This is a rapidly revolving, horizontal disc, fed by a revolving hopper which is placed in the center of a leaching vat and supported by a movable steel bridge. The sand is thrown outwardly by centrifugal force and distributed lightly and evenly in the vat. A motor-driven steel transfer table is used for shifting the excavator or distributor where there are two or more rows of vats. The ore having been leached, the excavator is removed to the leaching vat, the direction of motion of the conveying belt is reversed, and the sands are sent to the tailings pile where, as they are dumped by the tripper at the end of the belt, they are thrown a considerable distance farther by rapidly revolving bucket drums. The purpose of the latter appliance is to avoid the construction of a high supporting trestle. By forward discharge of the tailing stacker, the dump is built in advance of the conveyor, enabling the subsequent extension of the latter upon it. The Robins belt conveyor is employed in this system.

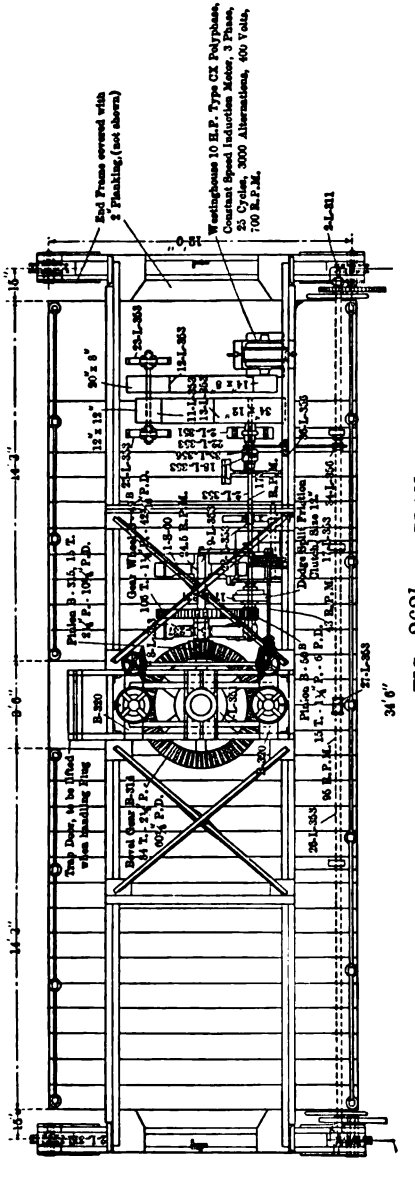

FIG. 262*b*. — PLAN.

ELEVATORS.

The following machines are used to elevate ore and water: bucket elevators, sand wheels and various forms of pumps.

§ 625. BUCKET ELEVATORS are used for gravel or sand, with or without water. They are endless belts with buckets attached, running upon two pulleys, one above and one below. The direction of lift, in different cases, varies from vertical to an inclination of perhaps 15° or 20° toward the down-coming side. With an inclined belt, intermediate supporting rollers are provided for the up-going side of the belt. The upper pulley generally drives the belt, receiving power from a side pulley. The lower pulley is hung in sliding boxes, which can be moved by tension screws to tighten the belt. The whole is often housed in a tight box, the lower part of which is called the boot, and is provided with a receiving spout. The boot sometimes extends beyond the rest of the housing and is open at the top. There are doors in the housing to permit repairs, oiling, and cleaning. Some mills have semicircular

metal boots made so as to be dropped for ease of cleaning, etc. The buckets on the belt come down on the under side, scoop up the ore from the boot as they turn on the lower pulley (or receive the ore directly from a spout just after they turn the pulley), carry it to the top on the upper side of the belt, and throw it out to the discharge spout by centrifugal force as they pass over the top pulley. The discharge spout should be covered for a few feet, to confine the ore in the spout. In order to prevent excessive wear at the point where the ore strikes the spout, it is well to construct the latter so that a protecting cover of ore shall be retained at that point. If this is not done the wear may be taken by a cast-iron plate. The speed of travel must be such that the buckets will throw their contents far enough, by centrifugal force, to make a clean discharge. The belt speeds found in the mills, with a few exceptions, range from 200 to 400 feet a minute, 300 feet being the most common figure. As elevators are subject to a good deal of wear they should be inspected frequently.

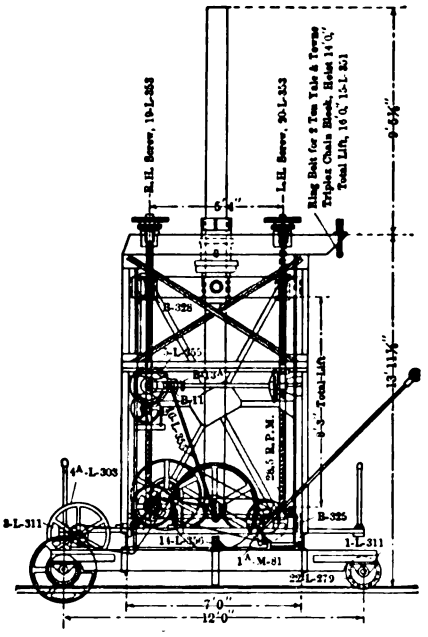

FIG. 262c. — END ELEVATION.

The belt is usually of rubber. The material for rubber belts should be of special quality, having an extra coating of rubber to withstand the wear of the ore. The ends of the belt are laced together in the usual way, and the buckets are riveted or bolted to the belt. The spaces between the buckets vary in the mills from 12 to 24 inches between centers, with one exceptional case of 36 inches. The belt is usually wide enough to extend ½ inch or 1 inch beyond the buckets on each side. The life of rubber belts is from 2 months to 4 years. This great range is largely due to differences in the amount of ore handled, and in the amount of idle time; but it is also partly due to different qualities of belt.

§ 626. SAND WHEELS are vertical revolving wheels that carry buckets on the inside of very wide rims. Sand and water are delivered to these buckets when at the lowest part of their revolution, from spouts on one or both sides of the wheel; and discharged when near the highest point into launders on one or both sides. These wheels are especially adapted to elevating mill tailings with water, when there is not enough fall to deliver them to the depositing ground by gravity. They are built for varying lifts, up to about 50 feet. Small wheels, frequently called *raff wheels*, are also used for low lifts, to return water and sand for re-treatment; for example, on the Wilfley table, which uses a little wheel 2 feet 9 inches in diameter to return its middlings. Their simplicity of construction and operation makes the running expense much less than for belt elevators. The wear is reduced to that upon two large journals and upon the buckets; and the wear upon the latter may be made much less than in a belt elevator, because the sand can be delivered to the buckets in the direction of their motion, which cannot be done with belts. The wheel is hung upon two journals and when small is driven by a pulley on the shaft. In the case of large wheels, the driving is done either by pinion and gear on the circumference

of the wheel, or by a rope passing over a large sheave constructed on the side of the wheel.

These wheels, one of which is shown in Fig. 263, are made up to 65 feet in diameter, ordinarily entirely of iron with the exception of the wooden buckets *A*. The wheel is driven either by ropes or pulley and belt. In the figure, as the wheel revolves in a counter-clockwise direction, slimes are scooped up from the sump *B* and discharged into the vat *C* above as the wheel reaches the upper point of its revolution.

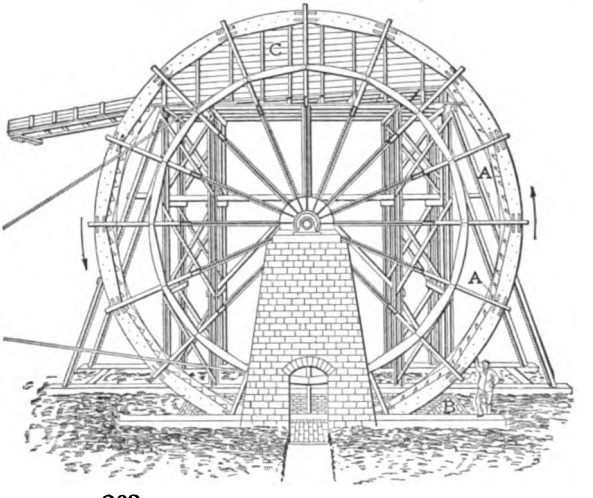

FIG. 263. — ELEVATION OF SAND WHEEL.

In the case of these wheels, if we let

R = radius in feet at the back of the buckets,
r = radius in feet at the mouth of the same,
n = number of buckets,
l = length of divisions measured on incline in inches,
t = thickness of the same in inches,
B = inside width of buckets,
C = capacity in cubic feet per revolution,

then

$$C = B\left(\frac{R^2 - r^2}{2} - \frac{ln}{144}\right).$$

As regards the proper speed for these wheels it is apparent that as the speed is increased a point will be reached at which centrifugal force will prevent the buckets from discharging. This may be called the critical speed. The speed used in practice is approximately ⅓ of the critical speed. Table 117 (see page 446) will serve to show the critical as well as the practical speed of wheels of different diameters.

Wood and Laschinger made a determination of the mechanical efficiency of a 25-foot wheel as follows:

Size 19 feet, 1 inch.
Weight of pulp lifted, 5,549 pounds per minute.
Theoretical horse-power required, 3.208.
Actual horse-power delivered by motor, 6.935.
Total power efficiency, 48.51%.

TABLE 117. — CRITICAL AND PRACTICAL SPEEDS FOR VARIOUS SIZES OF RAFT WHEELS.

Critical Speed.			Speed in Practice.	
Diameter of Wheel in Feet.	Revolutions per Minute.	Peripheral Velocity in Feet per Minute.	Revolutions per Minute.	Peripheral Velocity in Feet per Minute.
10	24.218	761	8.07	254
20	17.125	1,076	5.71	359
30	13.983	1,318	4.66	439
40	12.110	1,522	4.04	507
50	10.820	1,701	3.61	567
60	9.887	1,863	3.29	621
70	9.154	2,013	3.05	671

§ 627. PUMPS FOR SAND AND WATER. — Centrifugal pumps are more used than any other form for elevating sand and water, because they have no valves or plungers to be injured by the grit.

John A. Traylor & Company manufactures a solid-lined centrifugal sand-pump. These pumps are so constructed as to be especially adapted for the handling of sands, gravel, and other gritty materials. Fig. 264*a*, *b*, and *c*

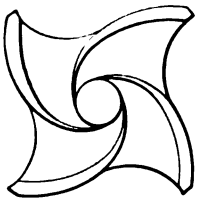

FIG. 264*a*. — RUNNER OF TRAYLOR CENTRIFUGAL SAND PUMP.

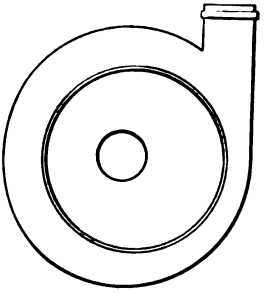

FIG. 264*b*. — LINER.

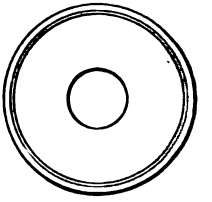

FIG. 264*c*. — FOLLOWER.

show the wearing parts. The wear on these pumps is taken up exclusively on the runner, solid liner, and follower. These parts are constructed of a special metal so hardened as to give them a life equal to that of manganese steel.

The liner is so constructed as to do away with the ill effects usually met with in the case of lined pumps, namely, the circulation of water and sands between the liner and shell or outer casing of the pump and the resultant wear upon the latter. Fig. 265 shows the casing (1) with the liner (2), follower (3), the runner (4) in place. It will be noted that the neck of the liner (2) is provided with packing rings (5) which prevent circulation of sand and water between the liner and outer casing, and cause this space to become filled with sand.

All wear is thus taken on the liner and runner, which are easily and cheaply renewed.

Details as to the capacities, speeds, etc., are given in Tables 118 and 119.

§ 628. THE SPIRAL SAND PUMP, made by J. H. Frenier & Son, of Rutland, Vermont, consists of a spiral ribbon of steel plate in form like a spiral clock spring. (See Fig. 266.) On each side is a steel disc, which is joined to the spiral by continuous air-tight joints, thus making a spiral tube of steel with a rect-

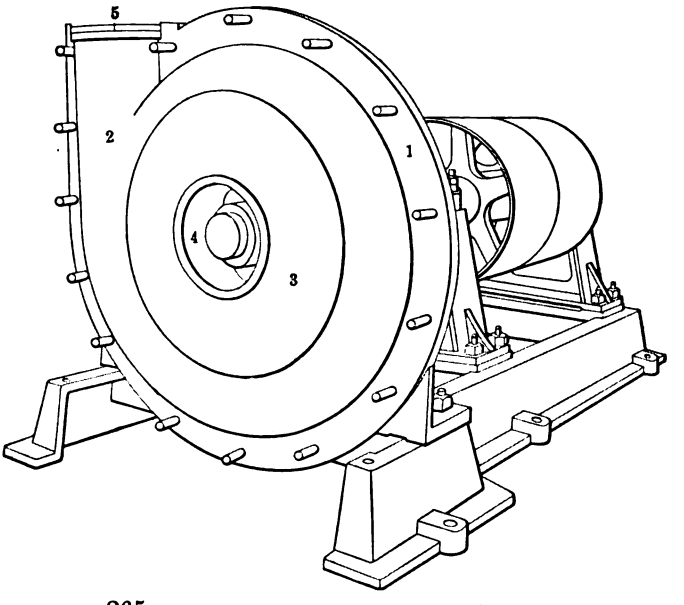

FIG. 265. — TRAYLOR CENTRIFUGAL SAND PUMP.

TABLE 118. — CAPACITIES OF JOHN A. TRAYLOR CENTRIFUGAL PUMPS.

Sands and Gritty Materials, Cubic Yards Solids per Hour.

Sizes.	Percent. of Solids.			Horse-power Required for each 10 Feet Elevation.	Pulley.	
	10 Percent.	15 Percent.	20 Percent.		Diameter.	Face.
2 Inch.....	5 cu. yds.	8 cu. yds.	12 cu. yds.	2	8 Inch	6 Inch
3 "	10 " "	15 " "	21 " "	3	12 "	8 "
4 "	14 " "	21 " "	28 " "	4	12 "	10 "
5 "	21 " "	32 " "	43 " "	6	14 "	12 "
6 "	30 " "	45 " "	60 " "	8	14 "	12 "

TABLE 119. — PROPER SPEEDS FOR TRAYLOR CENTRIFUGAL PUMPS AT SPECIFIED LIFTS.

No. of Pump.	Capacity Gals. per Minute.	Speeds at which Pumps should be Run to Lift to Different Heights.											
		Feet Lift.											
		5	10	15	20	25	30	35	40	50	60	80	100
		Revolutions per Minute.											
2	250	302	426	522	603	674	737	798	852	953	1,045	1,210	1,348
3	500	302	426	522	603	674	737	798	852	953	1,045	1,210	1,348
4	1,000	285	402	493	569	637	697	754	805	901	987	1,143	1,274
5	1,600	256	362	443	512	572	626	687	724	810	887	1,027	1,145
6	2,500	214	302	368	427	478	523	566	604	675	740	857	955

angular cross-section of constant area throughout. It is mounted on a hollow horizontal shaft, which has an opening to connect with the spiral tube. There are no valves, but the water and sand are raised by virtue of a hydrostatic head in each turn of the spiral, a part of each turn being filled with water and the rest with air (the pump being partly immersed in water in the air). The sum of these hydrostatic heads determines the height to which the water

can be forced. This height, therefore, depends simply on the number of turns of the spiral, and not, as in a centrifugal pump, on the speed of revolution. The speed, indeed, should be slow, because the loss of power due to friction and to centrifugal force increases rapidly with the speed. The manufacturers recommend 20 revolutions a minute. The spiral and sides are made of $\frac{3}{16}$-inch steel plate. The pump is so set in the receiving box that the center of the shaft is 7 inches above the surface of the water. At each revolution a certain quantity of water and sand is taken into the outer turn of the spiral, and as revolutions continue is carried to the center and discharged through an opening in the hollow shaft. Connection between this shaft and the discharge pipe is made by means of a nipple, a coupling, and a special stuffing ring. The greatest wear takes place between the coupling and the outer end of the nipple, but as both of these are small and easily replaced the cost of repairs is low. The end thrust on the shaft is taken up by a weighted bent lever, acting against the stuffing

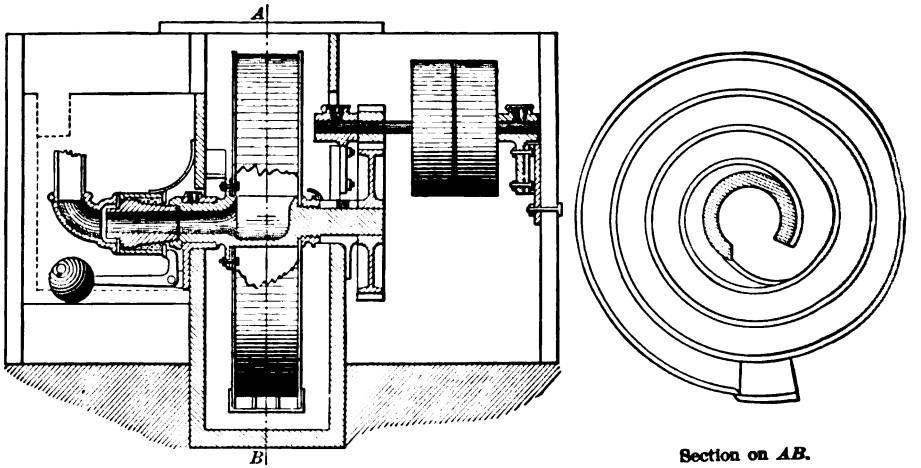

FIG. 266. — SPIRAL SAND PUMP. SCALE $\frac{1}{24}$ SIZE.

ring. The radial dimension of the spiral passage is about $2\frac{1}{2}$ inches. The outside width is either 6, 8, or 10 inches, with corresponding capacities of 75,000, of 100,000, and of 150,000 gallons in 24 hours. The diameter is either 44, 48, or 54 inches, with maximum lifts of 14 feet, 19 feet, and 25 feet respectively.

It is usually considered that the Frenier pump is best for a regular flow and for lifts within its capacity, while centrifugal pumps require less attention and are easier to install. There are many other varieties of pumps which find use in the mills. Numerous examples of these will be found in Ore Dressing. For water-supply pumps the student must be referred to treatises on that subject.

Launders

§ 629. Launders are troughs for conveying water, or water and sand, by gravity. They are generally rectangular in section, and made of planed boards or planks. Small sizes are sufficiently strong and water-tight when made of three planed boards with the bottom nailed to the two sides. Large launders built of four or more planks require binding frames every few feet to keep the planks in line, and to keep the joints tight. (See Fig. 267.) The planks are sometimes tongued and grooved. To keep the cross-joints tight, they are arranged to come over the supporting frames. Fine silt helps

to fill up the joints and make them tight. Linings of wood are often used, being replaced when worn out. Linings made of mild steel plate are sometimes used. The latter cost more at first, but have longer life than wood. Wooden linings, moreover, become very uneven before they are worn out, and therefore they require a steeper slope than is needed with the steel lining, because this unevenness retards the flow. Plate glass makes the most efficient lining for launders. Where ore falls into a chute or launder it is well to have a pocket in the bottom in which a certain amount of ore will collect and thus save wear.

Switches are sometimes required to turn a stream of pulp or water from one division of a split launder to another. In Fig. 268 the switch swings into place behind the projection *a*, the joint at that point being made tight by cotton waste or a piece of rubber belting. The switch is hinged by two pieces of rubber belting at *b*.

In mill work one sees the kind of launder that will convey a given quantity of water, or water and sand, with the least slope and least loss of mill head. The conditions that favor saving of slope are, therefore, important to every mill

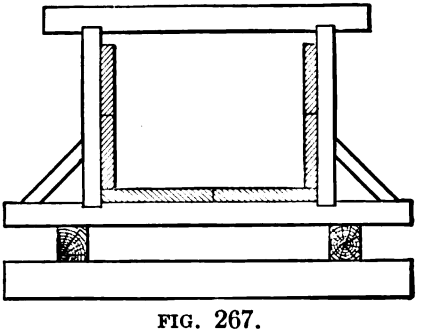

FIG. 267.

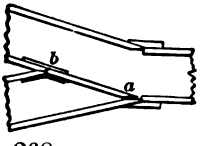

FIG. 268. — SKETCH FOR SPLIT LAUNDER.

man. If the slope is not sufficient the sand will build up on the bottom of the launder, and may finally cause it to overflow its sides. The simplest remedy for this is to increase the slope of the launder. The conditions affecting the slope may be stated thus: water carrying sand requires greater slope than water alone; coarse sand requires greater slope than fine sand; minerals of high specific gravity require greater slope than those of low; and pulp with a high percent. of sand requires greater slope than that with a lower percent.

Overstrom gives the diagram shown in Fig. 269. This diagram shows at a glance the amount of water necessary to transport any given quantity of sand in a launder of given slope.

For example: How much water will it take to transport 25 tons per 24 hours, or 35 pounds per minute, of 40 to 150-mesh tailings (silica), on a ¼-inch to 1-foot grade, and how wide should the launder be? If we look at Fig. 269 we find at the bottom horizontal dimensions marked *slope in inches per foot;* if we follow up the vertical through the point marked 0.25 until we come to the line *A B* we shall find that 40 pounds of water per inch of width is the most economical flow. Now if we pass to the plotted curve marked 40, and follow it until it intersects the vertical through 0.25, we shall see that 1 pound of water will transport 0.0375 pound of material, or 40 pounds will transport 1.5 pounds of sand per inch of width of launder per minute. Therefore the launder should be about 23.5 inches wide. This launder then requires 23.5 times 40, making 940 pounds of water per minute. This is the least amount of water that would transport the sand as specified.

A very interesting series of experiments on the flow of sand and water in a launder has been recently conducted by F. K. Blue. The purpose of these experiments was primarily to determine the conditions as to grade and velocity

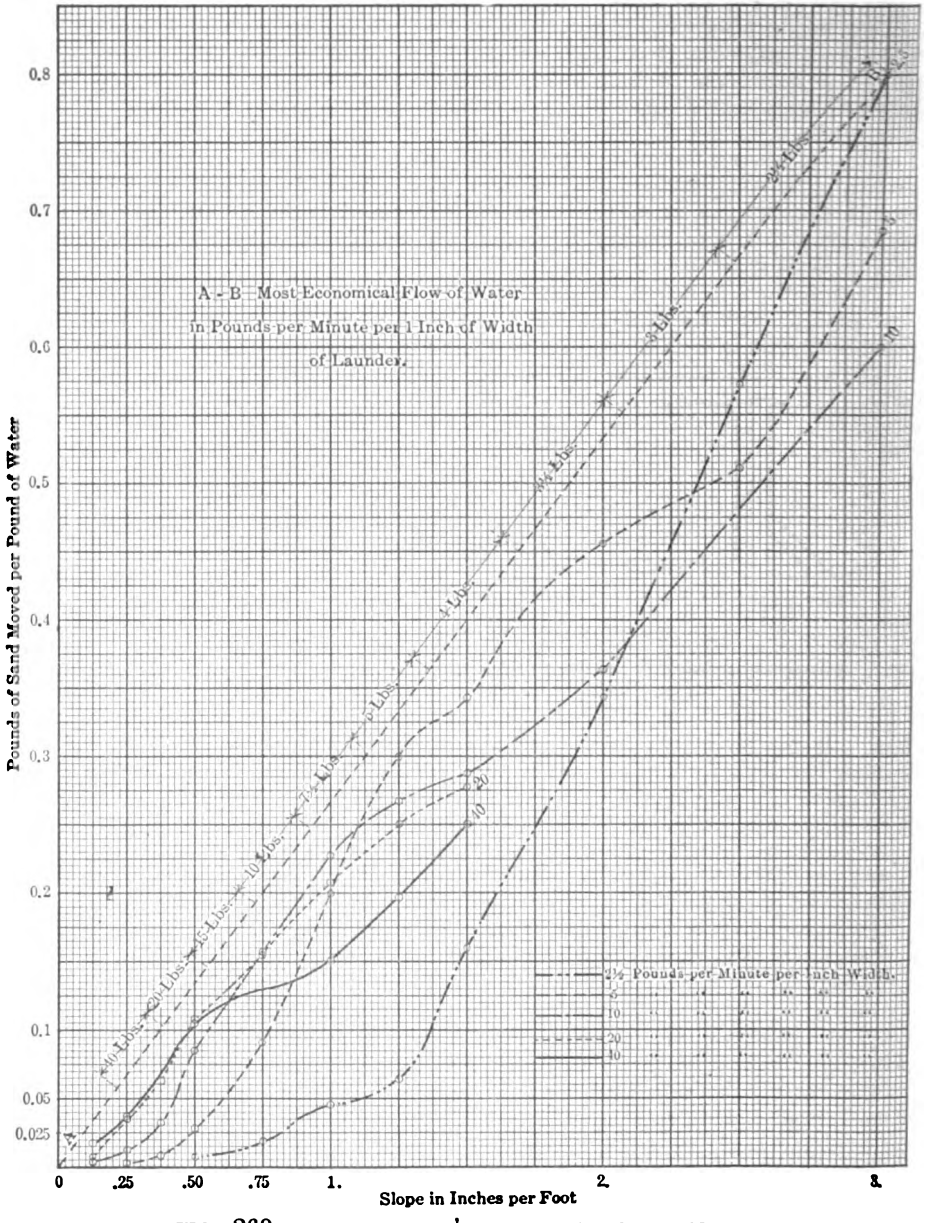

FIG. 269. — OVERSTROM'S LAUNDER DIAGRAM.

under which the sand in a mixture of sand and water would fall to the bottom of the launder and fill it up, so that the material would run over; information of this nature being desirable in designing a large stamp mill covering considerable

area and located on nearly flat ground. It was also desired to know what effect the sand in suspension has on the coefficient of fluid friction of water running in a launder.

An experimental launder was so constructed that the slope could be varied and the quantities of water and pulp, as well as the velocities, measured at will. With this apparatus Mr. Blue obtained a series of results from which he has been able to derive several formulæ which should be of value to any one called upon to design a mill.

These formulæ for sand and water are as follows:

$$S = 0.186\sqrt{g}$$
$$V = 8.15\sqrt{q}$$

when S = slope of launder percent.
g = ratio of the volume of wet sand, or slime and sand, to the total volume of the mixture flowing in the launder;
and V = average velocity in feet per second.

By adding a little slime to the mixture of sand and water, enough so that the ratio of sand to slime was 9 to 1, Blue found that a very marked reduction in the frictional resistances occurred in the launder. This means, of course, increased velocity with an increase in the relative amount of slimes contained in the pulp.

For sand, slime, and water, Mr. Blue gives the formula

$$S = 0.0910\sqrt{q}$$

Suppose it is desired to find the grade of a launder that will carry 25% of sand by volume and a little slime, and hold it in suspension in the water while flowing. If we substitute in the formula $S = 0.0910\sqrt{q}$, we get $S = 0.0910\sqrt{0.25} = 0.045$. Hence a grade of about 5% or $\frac{5}{8}$ inch to the foot would be just about sufficient to keep the pulp in suspension, hence it would be reasonably safe to lay this launder on a grade of $\frac{3}{4}$ inch to the foot, with a few feet of say $1\frac{1}{4}$ inch to the foot at the start. The launder should be designed much deeper than required so as to take care of any irregularities and banking up which might occur during a temporary reduction in the amount of water.

If there were no slime in the mixture, the velocity necessary to carry this would be $V = 8.15\sqrt{0.25} = 4$ feet per second. Since the above mixture contains slime the required velocity will be a little less.

It should be added that of the sand used in these experiments 77% passes a 40-mesh screen and rests on 80 mesh.

To show that Blue's formula does hold in practice the following example may suffice. At the Standard Mine, Bodie, California, a launder 4 inches wide and 9 inches deep, set on a grade of $\frac{7}{16}$ inch to the foot, carries pulp containing 17 to 19% solids and flows freely. A grade of $\frac{5}{16}$ inch was found insufficient in cold weather. As it is evident from the character of the mill that the product carries slimes, we will apply the formula $S = 0.0910\sqrt{q}$; considering that the pulp carries 18% solids, we have $S = 0.0910\sqrt{0.18}$, which gives $S = 3.82\%$, or about $\frac{7}{16}$ inch to the foot. This agrees perfectly with what is being done in practice.

If one has given the slope of the launder and the amount of material which is to be transported, the method of computation suggested by Overstrom furnishes the required width and water quantities. If, on the other hand, the proper slope for a launder, carrying a known mixture of sand and water, is required, Blue's formula gives results which are safe to use in practice.

Unwaterers and Driers.

§ 630. Unwatering Devices are used to diminish the water carried by sand, or the sand carried by water. The sand, if of value, is thereby put in better condition for the next step in the process; if it is waste, it is in condition to be dumped or loaded while the water may be in condition to be used again. These devices may be classified as boxes, screens, amd mechanical unwaterers. Pulp thickening and clarifying devices described in Chapter IX are unwatering devices, but two other dewaterers will be described here.

§ 631. Fleming Dewatering Wheel. — A pulley wheel 18 inches in diameter, and 6-inch face, is drilled to receive 12 vanes or paddles which are bolted to it, staggered, as shown in Figs. 270*a* and *b*, making the diameter of the final wheel 42 inches. The vanes are bent on a 12-inch radius with their tip ends on a line drawn at an angle of 45°, with the radius drawn through the point of attachment of the vane to the wheel. The result is a number of shovel-

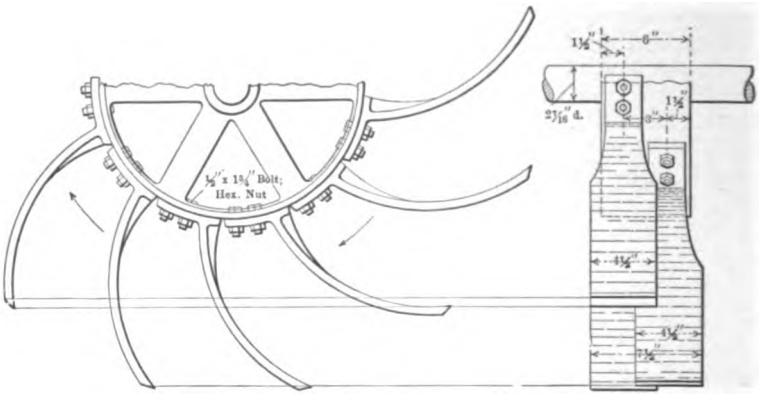

FIG. 270*a*. — FLEMING DEWATERING WHEEL. FIG. 270*b*. — FRONT VIEW.

shaped paddles which are made to lift concentrates or jig tailings, to be dewatered, out of a tank and deliver them unwatered at a slight elevation above the level of the water in the tank. The wheel is revolved at the rate of 9 to 12 revolutions per minute in the direction indicated, *i.e.*, so that the dewatered material is lifted by the convex side of the paddle. The tank is 50 inches long by 36 inches wide, inside measurements, and 30 inches deep. The shaft carrying the wheel is mounted on the top of the box, 22 inches from one end. The inlet launder is at one end of the tank, and as the wheel revolves it lifts whatever has settled on the bottom of the tank and discharges its products into an outlet trough which slopes at an angle of 45°. The wheel is housed on its discharge side to prevent spilling of material.

§ 632. Rogers' Dewatering Screen. — The dewatering screen, shown in Fig. 271*a* and *b*, is used to treat material above 2 millimeters in size, and requires no attention while discharging the material with as little water as if filtered. As shown in the side elevation, the ore and water fall together on an inclined 14-mesh screen (1) which quickly makes a bank of ore of a slope corresponding to its angle of repose. In Fig. 271*b* it will be noted that the screen instead of presenting a smooth surface has a warped surface. This serves to retain a bed through which the water can percolate, thus diminishing the wear of the screen, and also assist in dewatering by preventing blinding of the screen due to ore

particles being caught in the meshes while passing over. The ore rolls down the incline and is discharged, while the water goes through the bank of ore and the screen into the spitzkasten below.

Driers.

§ 633. Classification. — Three distinct types of driers are in use in the mills: (1) drying floors, (2) cylindrical driers, and (3) tower driers.

§ 634. Drying Floors. — The simplest form of drier consists of a series of iron plates placed over a flue so that they can be heated from below by the

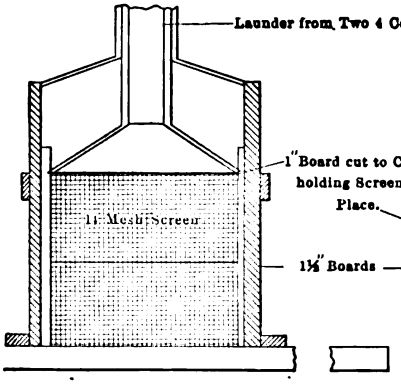

FIG. 271*a*. — ROGERS' DEWATERING SCREEN. END ELEVATION.

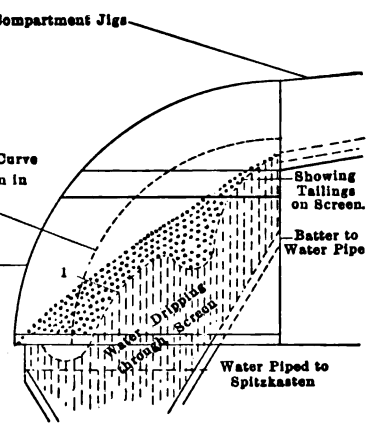

FIG. 271*b*. — SIDE ELEVATION.

hot gases passing through the flue. This form of drier may be so arranged as to utilize the waste heat from other operations. If the plates are horizontal, hand labor is required for spreading and moving the ore. If the plates are inclined, the dry ore may be made to slide off into a conveyor at the side. This form of drier is the least efficient of all the various forms of driers. Under most favorable conditions, and even with moderate stirring, it has not been found possible to dry more than 0.3 cubic foot of ore per hour per square foot of area; whereas with a well-designed mechanical drier, 0.4 cubic foot is obtainable.

§ 635. Cylindrical Driers. — Two general types of cylindrical driers are in use: (1) direct heat driers and (2) direct heat and direct contact driers. In the first type the ore does not come into direct contact with the heated gases from the furnace, in the latter it does. The first type includes cylindrical driers heated from without in which the ore is caused to travel through the conveyor by means of an endless screw. This is an adaptation of the screw conveyor discussed in a previous article. Cylindrical driers are capable of evaporating 9 or 10 pounds of water per pound of coal burned. Figs. 272*a*, *b*, and *c* show a double cylindrical drier.

The material to be dried is charged into one end of the inner tube and is conveyed by helical blades, as the cylinder rotates, to the other end; thence it is discharged into the outer cylinder, lifted by longitudinal blades on the inside of this cylinder, dropped onto the outside of the inner cylinder, which is provided with helical blades similar to those on the inside of the same cylinder,

and so gradually reconveyed to the same end from which it was fed, being lifted each time it falls, and is again showered on the top of the inner tube. An exhaust fan removes the moist air as rapidly as necessary, the quantity

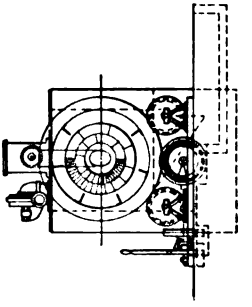

FIG. 272c. — CROSS-SECTION.

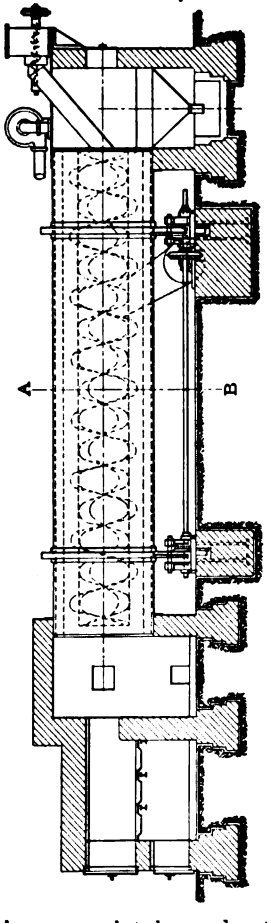

FIG. 272a. — SECTION OF ALSING IMPROVED DRIER.

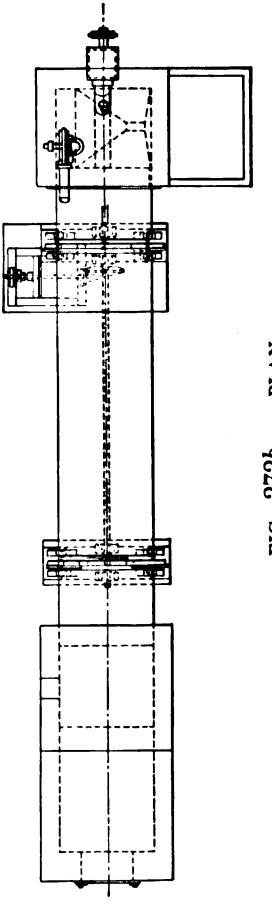

FIG. 272b. — PLAN.

of air being completely under the control of the operator, who can permit the air to approach the point of saturation as close as may be desirable for economic results. With the arrangement the material is subject to intimate contact with the heated air, is under perfect control, and the moisture is removed as

rapidly as possible, while the material travels twice the length of the cylinder, and is in contact with the heated air double the time it would be in an ordinary rotary drier.

§ 636. TOWER DRIERS. — These consist of a tower up through which hot gases are rising. The ore, introduced at the top, falls down over a series of baffle plates and is dried as it falls. Fans are provided to exhaust the moisture laden air. The economy of this form of drier is about the same as for cylindrical driers.

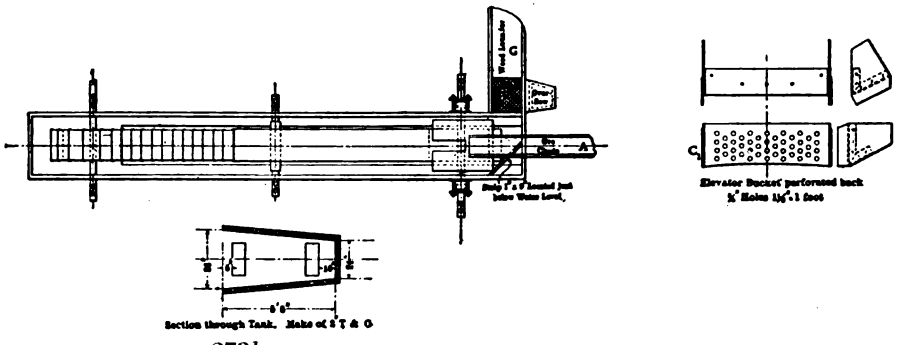

FIG. 273*b*. — PLAN.

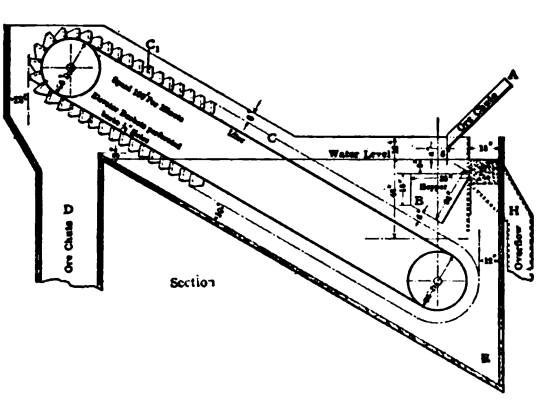

FIG. 273*a*. — SEPARATOR FOR REMOVING WOOD. SECTION.

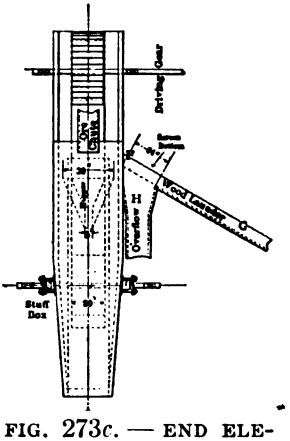

FIG. 273*c*. — END ELEVATION.

§ 637. REMOVAL OF PICK POINTS, BOLTS, STICKS, ETC. — Iron may be removed from the ore by electro-magnets arranged over the chutes conveying it to the crushers or over belt conveyors if these are used.

At the Butte Reduction Works it was found that an ordinary mine wedge, 8 inches long by 4 inches wide by 2 inches thick at the large end, when caught in the 9 by 15-inch breakers, would take as long to work through as a ton of ore and sometimes would clog the crusher completely, burning the driving belt and even melting the babbitt in the bearings.

The scheme here outlined was formuated by the foreman to get rid of the wood and has been applied very successfully, 40 tons of wood being recovered from each 20,000 tons of ore. In Fig. 273*a*, *b*, and *c*, *A* is the ore chute bringing the ore and wood together into the tank; *B* is a hopper under water. The ore passes out to conveyor *C* and is conveyed to ore chute *D*. The tank *E* is kept

full of water. When ore and wood are discharged into *B* below the water level the wood floats to the top of the water. The elevator buckets have perforated backs allowing the water to rush through and back into the tank. This rush of water carries the floating wood to the screen *F*, which removes the wood while the wood itself passes down the launder *G*. The water passes through the screen *F* in the bottom of the launder *G* and so down the overflow pipe *H*. This appliance has increased the capacity of the crushing plant 15%.

§ 638. Dust-Fans and Chambers. — When ore is treated dry, as in sampling mills, pneumatic mills, and magnetic concentrators, there may be so much floating dust that suction fans are needed to remove it. Fans are also used in some cases to hasten drying. In one of the mills two suction fans are used, one to remove dust from the magnetic machines, and the other to remove dust from the crushing machinery and trommels. A suction fan may be connected with the housings of rolls, elevators, and trommels to remove dust. The heavier part of the dust settles in a dust chamber.

The centrifugal dust collector commonly used in wood-working mills and flour mills may prove valuable in some cases. Where the dust carries much value, or where it is especially necessary to prevent it from blowing into the air, a bag room is a simple and efficient means of catching it. This consists of a room in which a large number of burlap or cotton cloth bags or tubes are suspended vertically. There are two methods of operation. In one, the air and dust come through the large horizontal distributing pipes in the top of the room, and pass down through nipples into the bags, the lower ends of which lie on the floor. The air can pass through the meshes of the bags while the dust cannot. The latter falls or is shaken down at intervals, and is periodically emptied into wheelbarrows. In the other method, the air and dust are carried into a chamber with hoppers in the bottom, and pass up into the bags through nipples in the top of the chamber. The dust is shaken down into the hoppers, from which it is drawn off through gates. Sturtevant claims that, for ore, burlap is a better material than cotton: 1st, because the holes are not so easily clogged by the dust; and 2d, because, when the blast is stopped, the collapse of the bags causes a large part of the adhering dust to fall down, while with cotton the bags must be shaken to remove the dust.

§ 639. Weighing Ore. — Platform scales may be provided upon which the cars or wagons bringing ore, or removing concentrates, are run to be weighed. Automatic scales of various forms are now coming into use in the mills. These are of two general types: the hopper type, which is intermittent, and the continuous type, which will be described.

§ 640. Blake-Denison Continuous Weighers. — The principle upon which the Blake-Denison continuous weigher is constructed is that of suspending a short section of the conveyor and weighing the material as it passes over this suspension. If a 6-foot section of the conveyor is suspended, the machine is designed to record the weight of the material on the suspension every time the conveyor travels 6 feet, and in this manner the material on every portion of the conveyor is weighed successively.

Fig. 274 represents the weighing mechanism. The steelyard (1) is balanced to suit the unloaded suspension and arranged to rise accurately in proportion to any load introduced upon it. A gripping device (2) is provided, which at intervals, governed by the speed of the conveyor, grips the steelyard in the position it has assumed. The measuring quadrant (3) gauges the weight indicated by the steelyard when so held, and the recording mechanism (4) registers the results.

The resistance of the steelyard to the load is provided by a hollow plunger (5), suspended in a bath of mercury in such a way that it forms a dash pot (6),

preventing oscillation and insuring the steelyard being always in a position indicative of the load. The gripping and measuring actions are effected by two cams upon a shaft (7) operated by gears from a drum which is revolved by the conveyor itself.

This machine seems to have many advantages over the former hopper-style weighing machines. There is no hopper to become choked and no cut-off

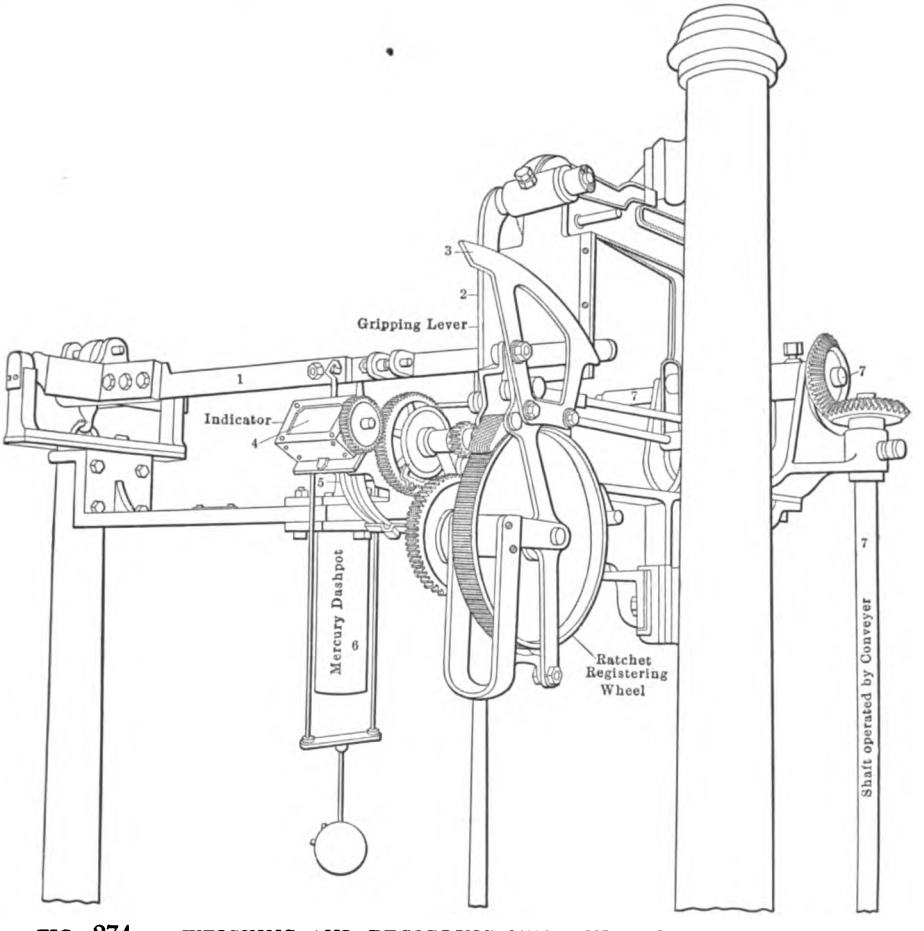

FIG. 274. — WEIGHING AND RECORDING MECHANISM OF BLAKE–DENISON WEIGHER.

valves. The material to be weighed does not touch any part of the weigher, thus reducing the wear to a minimum, and avoiding the possibility of interference with the operation of the conveyor. There is no jar nor shock to dull the knife edge, the vital part of any scale. There is no auxiliary power needed and the machine is said to be accurate to within one-half of 1%. Material of any size or consistency can be handled and at any speed.

PART V.

MILL PROCESSES AND MANAGEMENT.

Having taken up in detail the individual machines used in the preparation and concentration of ores it is quite fitting that we should next see how these various machines may be grouped collectively in order to make a complete ore-dressing plant. This can be shown best by giving outlines of modern mills throughout the United States which are working on various ores. Mill management, construction, general items, such as operating, power, water costs, etc., and testing for the selection of processes suitable for concentrating divers ores also naturally come under this division.

CHAPTER XVI.

MILL PRINCIPLES AND PROCESSES.

§ 641. SUMMARY OF PRINCIPLES. — A resumé of some of the various principles employed in ore dressing which have already been taken up in detail will be inserted here for the convenience of the student. The methods of combining these principles will be found in the mill outlines or flow-sheets which follow later.

Hand Picking. — The eye and hand are guided in selecting the good ore from the waste, the waste from the good ore, or one valuable mineral from another by the color, luster, aggregation, fracture, and specific gravity of the minerals.

Sizing by Screens puts together in groups particles which are of about the same size irrespective of specific gravity. The variation of size ranges from the largest grain that could come through the screen above to the smallest grain that could rest on the screen below. The trommels or drum screens and the flat screens, whether shaken or fixed, are included in this class.

Sizing by a Water Film on a Surface puts together particles which are about the same size. The specific gravity of the minerals probably affects this operation to a limited degree. For example, the finer grains of quartz in any given product roll more easily than the grains of galena of the same size. The slime table, canvas table, blanket table, and buddle are all included in this class.

Sorting by Free Settling is done by classifiers of all kinds. It puts together in any given product particles that are equal settling under free-settling conditions, in which the particle of mineral of higher specific gravity is of smaller diameter than that of lower specific gravity.

Elutriation is done by stirring up the mixed grains in a vat or tank. After a period of settling the coarser grains, the supernatant water containing the lighter grains is drawn off. The operation is free settling applied to very fine particles. The washing of clays is virtually elutriation, but it is generally continuous as far as the removal of the fine stuff from the coarse is concerned, intermittent only in the settling of the fine clay.

Sorting by Hindered Settling is done on the beds of jigs during pulsion or the forward stroke of the plunger. It causes the particles to become layered or stratified and brings together, in any layer, grains that are equal settling under hindered-settling conditions. Here again the grain of higher specific gravity which is brought into equilibrium with one of lower specific gravity is smaller in diameter than the latter, but the difference in diameters is considerably greater than with free settling.

Suction takes place on the beds of jigs during the return stroke of the plunger. By it any grains of high specific gravity that are small enough to do so are drawn down through the interstices of the bed into the hutch below.

Sorting by Settling in Air. — This action takes place on the bed of a pneumatic jig during the pulsion or forward motion of the plunger. It puts together grains that are equal settling in air. The effect may not be dissimilar to hindered

settling in water. No extensive investigation to settle this point is known to the author.

Momentum and Trajectory. — When particles are thrown with equal velocity in a horizontal direction they hold their momentum for different lengths of time according to their specific gravity and size. In consequence of this they drop at shorter or longer distances from the starting point. The grains of equal trajectory are grouped in practically the same way as grains that are equal settling in air. There may be some difference in the ratio of diameter in the two cases, but in regard to this the author has no information. The air separator shown in Fig. 248 works on this principle.

Agitation takes place in the bed of sand on a vanner belt or on a jerking table. By it the grains of heavy mineral are settled into a layer beneath those of the lighter. The finest grains of heavy mineral are, however, imperfectly settled. The travel of the vanner belt carries up the heavy layer. The heavy layer on the bumping or jerking table is removed by the same jerking movement which makes the layers.

Greasy Flotation. — When particles refuse to become wetted they may float in a little dimple in the surface of the water, or if immersed they may retain attached to them air bubbles which float them up later. This principle is more often an injury than a benefit; but it is now being successfully used at a few mills, and with good results on the galena-sphalerite ores of Broken Hill, New South Wales, Australia, and in the separation of lead, zinc, iron, and copper sulphides, with the Coates tubes, in Nevada.

Plate Amalgamation. — When pulp containing free gold, freshly brightened by the action of the stamps, flows over, or, still better, impinges upon a clean amalgamated plate, the gold particles are instantly amalgamated and cemented to the plate while the sand flows off.

The Greased Plate. — When diamond-bearing sands are fed with water upon an inclined table with a suitable coating of grease upon it, the diamonds stick to the grease and are retained, while the quartz sand flows off with the water.

Electro-conductivity. — Many minerals have been found to be capable of conducting electricity, some to a greater degree than others, while the waste rock or gangue is often non-conductive. This principle of ore separation is made use of by several electrostatic separators, including the Blake, Huff, and Sutton, Steele, and Steele machines.

Magnetism. — When mixed magnetic and non-magnetic sands are brought within the sphere of attraction of a magnet, the former are attracted while the latter are not. When mixed particles of more magnetic and less magnetic power are subjected to an electromagnet the current of electricity may be so adjusted as to take out only those that are more magnetic, allowing the less magnetic to move on.

Roasting for Magnetism. — When mixed minerals, one of which contains iron and is susceptible of decomposition by heat and oxidation, are roasted in a furnace at a moderate heat with a flame of limited oxidizing power, the iron mineral goes over into magnetic sulphide or oxide which is strongly attracted by the magnet, while the other does not. The removal of pyrite from sphalerite is an illustration.

Roasting for Porosity. — When two minerals, one of which is more susceptible to decomposition by heat and oxidation than the other, are roasted at a moderate heat the former becomes soft, porous or spongy in form, and practically lighter in specific gravity, while the latter remains unchanged. The removal of pyrite from cassiterite (tinstone) is an illustration.

Decrepitation. — If a product, consisting of a crystallized mineral and an

amorphous mineral, or of two crystallized minerals which decrepitate at different temperatures, be heated on a plate, one of the minerals may decrepitate or break up into small fragments while the other remains unchanged. The removal of barite from sphalerite is an illustration of this.

Centrifugal Force. — If an emulsion of two liquids be placed in a strong cylinder which is being revolved at high speed, the lighter component liquid seeks the center of the cylinder while the heavier seeks the circumference. This principle is used in the milk separator. If water carrying fine mineral slimes be put in the above cylinder the solid particles all seek the circumference, and probably do so in the same order that they would fall under free-settling conditions. It would seem, therefore, that the best that could be expected would be the dewatering of fine pulp. The efforts to utilize this principle have not produced a machine which is generally accepted in ore dressing.

Brittleness under Crushing Force. — Of two minerals being subjected to crushing by pressure as with rolls, one may be brittle and break easily to fine grains, while the other is tenacious or even malleable, and refuses to be broken finely. Native copper and gangue may be so separated, but the separation is incomplete since there is always some fine copper to go with the gangue.

Friability under a Blow. — Of two minerals subjected to the beating action of high-speed revolving beaters, one may be broken into small grains while the other is not.

§ 642. COMBINATIONS OF PRINCIPLES OF SEPARATION. — A few of the above principles of concentration, if used alone and unassociated with others, would give a commercially complete separation of the values from the gangue in given ores; but it may be stated that a majority of the principles would give little or no concentration unless two or more are used in combination. Several such combinations are given below.

Sizing before Sorting is a combination illustrated in trommels followed by jigging with water or air, and in screening followed by some centrifugal dry separators. In both of these groups the screening places together grains of the same size, but different gravities, and the jigging or the dry separating separates the heavier grains of each group from the lighter.

Sizing followed by Agitation is a combination illustrated by slime table middlings treated on a vanner. Here the slime table has removed the larger part of the fine concentrates, and sends its middlings, which are coarser, to a vanner, which separates the valuable minerals from the waste, making a very appropriate grouping of machines.

Sizing followed by Magnetism and by Sorting occurs in trommels followed by Wetherill magnets and by jigs in a mill at Franklin Furnace, New Jersey. The trommel puts like sizes together, the magnet takes out the franklinite suitable for the zinc oxide furnace and spiegel furnace, and the jig saves the willemite and zincite from the limestone for the spelter furnace.

Sorting before Sizing is illustrated by a classifier followed by a slime table. The box classifier puts the small grain of mineral of higher gravity with the larger grain of lower, and the table following, by its quality of sizing retains the small grain of heavy mineral and rejects the large grain of waste.

Sorting followed by Agitation occurs where a classifier is followed by a vanner. This is not an entirely logical method, as the vanner does not require the larger grains of heavy mineral to be taken out. It is really an expedient to get a series of products to be treated by a series of vanners.

Sorting followed by Suction is shown by a hydraulic classifier followed by a bedded jig. The classifier puts the smaller grains of heavy mineral with the larger grains of lighter mineral. The bedded jig by suction draws down the small grains of heavy mineral through the interstices into the hutch below.

Sorting followed by Suction and again by Suction occurs where a classifier is followed by a roughing jig and by a finishing jig. The classifier puts the larger lighter grains with the smaller, heavier. The roughing jig with its coarse bed and rapid treatment rejects the largest light waste, yielding a hutch product of small quantity for the finishing jig to treat more slowly with a finer bed. On the finishing jig light particles are lifted during pulsion while the fine heavy particles are drawn down through the bed into the hutch during suction.

Amalgamation followed by Agitation occurs where an amalgamated plate is followed by a vanner. The amalgamated plate saves the bright free gold and the vanner saves the rusty gold and the values that are associated with the heavy mineral.

Amalgamation and Agitation followed by Sorting, Sizing, and Agitation is a combination shown by amalgamated plate, vanner, classifier, canvas table and vanner. The plate takes the clean gold, the first vanner the coarser heavy values, the classifier throws away in its spigot product the coarse waste, the canvas table throws away a finer waste product, and finally the little vanner saves the finest values, rejecting the finest waste.

Various other combinations are in use, as will be seen by the reader when he studies the mill schemes, and furthermore, new combinations may suggest themselves to him.

§ 643. Theoretically the proper combination of principles should give a perfect separation with a given ore. Practice, however, seldom, if ever, obtains such results, and the chief reasons for imperfect work are given below in the order of their importance:

a. Fine slimes.
b. Included grains.
c. Flattish grains.
d. Compact grains (if concentrator is run too fast).
e. Oxidized or weathered grains.

The fine slimes *a* are saved with difficulty because they settle so slowly, and are so easily carried forward by water currents that the commercial limit is reached before the last of the values is saved. A discussion of the commercial limits in ore dressing will be found in § 706. The included grains *b* prevent a perfect separation since they oblige us to send gangue into the heads and values into the tailings, or else make a middling product requiring re-treatment. This middling product will include also some of the flattish grains. The flattish grains *c* are difficult to separate owing to their slowness in settling. The compact grains *d* are easily separated unless the machines are run too fast. Oxidized or weathered grains, *e*, seem to affect the flotation and magnetic processes, in that a lower extraction is obtained when working over old waste dumps which have been exposed to the weather than when handling freshly made tailings of a similar nature.

Schemes of Mill Treatment.

§ 644. In order that the student may properly grasp the reasons for placing many of the machines in certain places in the mill, and also that he may, partially at least, understand the relations existing and the connections between the devices used, the author has decided to give two general flow-sheets representing the hillside type and the level-site type of mills, illustrating the same by proper cuts, and carrying the student along with a somewhat detailed description of the reason why the machines are placed as they are and the ore follows the path it does. This will be followed in turn by a detailed description of some typical and modern mills working on different kinds of ore in various

localities. Anything unusual occurring in the latter mills will be described when it is reached.

Of course the student must realize that the great variety of states of mineral aggregation existing in ores may indicate entirely different treatment for two ores of even identically the same chemical composition.

MILL SITE.

§ 645. One of the first considerations in the erection of an ore-dressing plant is an advantageous location. This is of secondary importance, however, to the careful and exhaustive tests which should be made on the ore, with the proposed method of treatment, and a certainty of an ore supply blocked out in the mine sufficient to keep the mill running for a considerable length of time after it is erected. Failure to observe the latter considerations in the past has resulted in the loss of millions of dollars and excellent reputations.

In order to avoid handling the ore, and thus reduce the cost of milling and the production of fines by abrasion, the mill designer often takes advantage of the force of gravity and places the successive machines at successively lower levels, so that the material flows by gravity from one machine to the next one in order. To secure the necessary difference in elevation between the breaker and the final concentrating apparatus for this arrangement, without carrying the back of the mill too high, it often becomes desirable to place the mill on sloping ground. The slope should be chosen to correspond as nearly as possible with the calculated inclination of an imaginary line drawn from the gates of the ore bins to the tailings discharge of the mill, in order to avoid unnecessary excavation and building. When ground has to be cut away, strong retaining walls should be constructed back of the excavation and between the benches to prevent caving. Such walls are usually provided with drains to keep water, and eventually, frost, away from the buildings and their foundations.

In the absence of a suitable hillside of course, an elevator or inclined conveyor may be used to elevate the ore to the bins in the top of the mill, but these add what might be an uncalled for expense.

§ 646. Hillside Type Mill. — A mill of this type is shown in section in Fig. 275*a* and in plan in Fig. 275*b*. It is an old type of mill which was successfully treating Cœur d'Alene ores previous to the advent into milling of the Wilfley table. Since the introduction of the jerking tables this plant has been remodeled and is doing much better work, but for our purpose it will serve well in its old form. The student should observe the gradual slope from the top or breaker floor to the bottom or tailings floor. This slope is about medium and some mills have a very much steeper grade. The student will also note the number of elevators required because of the insufficiency of the slope. The excavations and retaining walls, as well as the features just mentioned, are best shown in Fig. 275*a*.

This mill had a capacity of 300 tons in 24 hours and ran 24 hours a day, 7 days per week. The ore consisted of the economic minerals, argentiferous galena mostly finely disseminated, pyrite, and sphalerite, and a gangue of massive siderite with some quartz. The problem was to save the silver and lead values without the zinc. The ore was brought by a mine tramway 1,800 feet in cars holding from 2.5 to 3 tons, and then by railroad 3 miles in cars holding 10 tons, and was delivered to (1).

1. No. 1 or receiving bin holding 1,000 tons. From the railroad cars; delivers by gates and chutes to 1.5-ton tram cars, and thence 150 feet to (2).

2. Two grizzlies with 1.5-inch spaces between the bars. From (1); deliver oversize to (3) and undersize to (4).

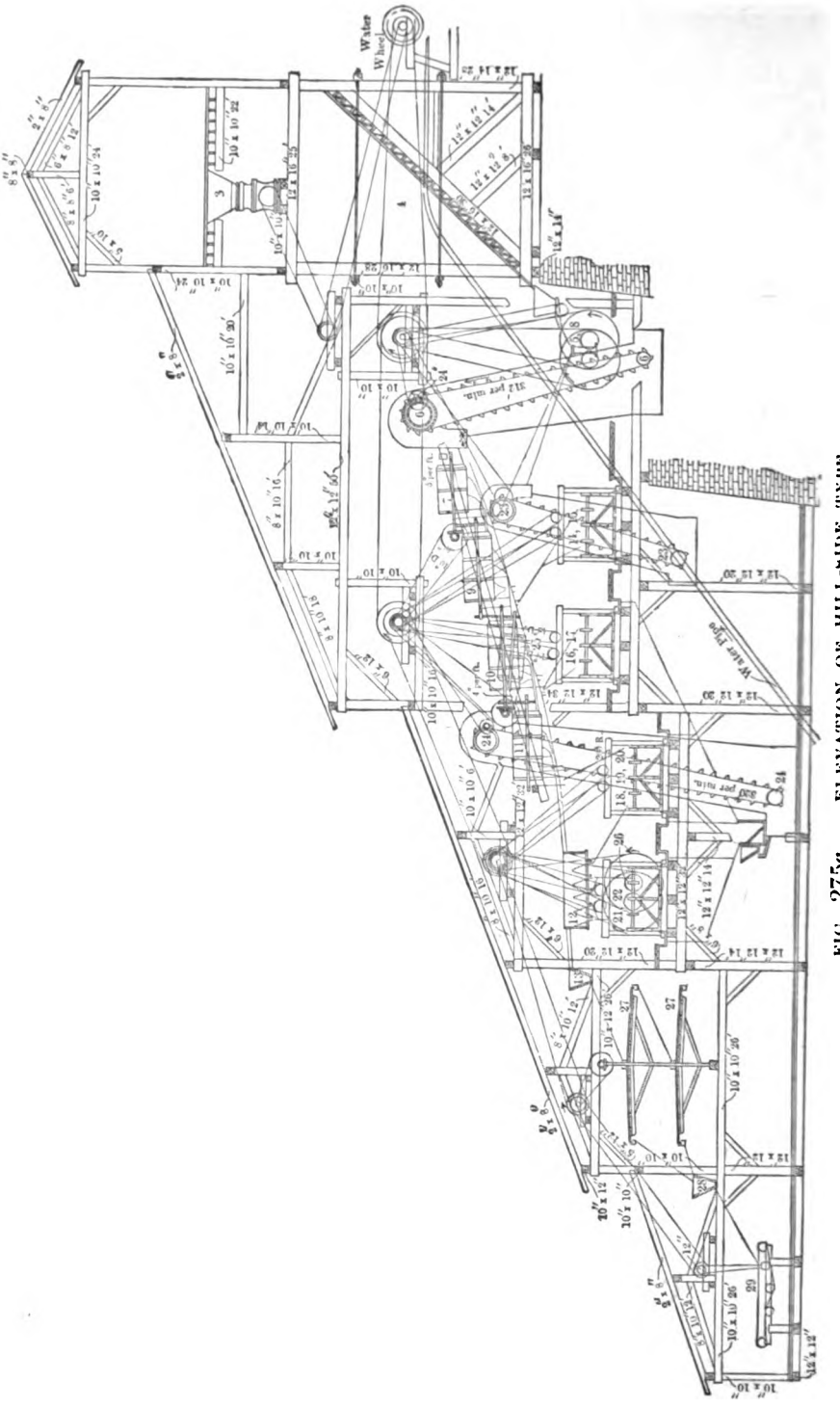

FIG. 275a. ELEVATION OF HILL-SIDE TYPE.

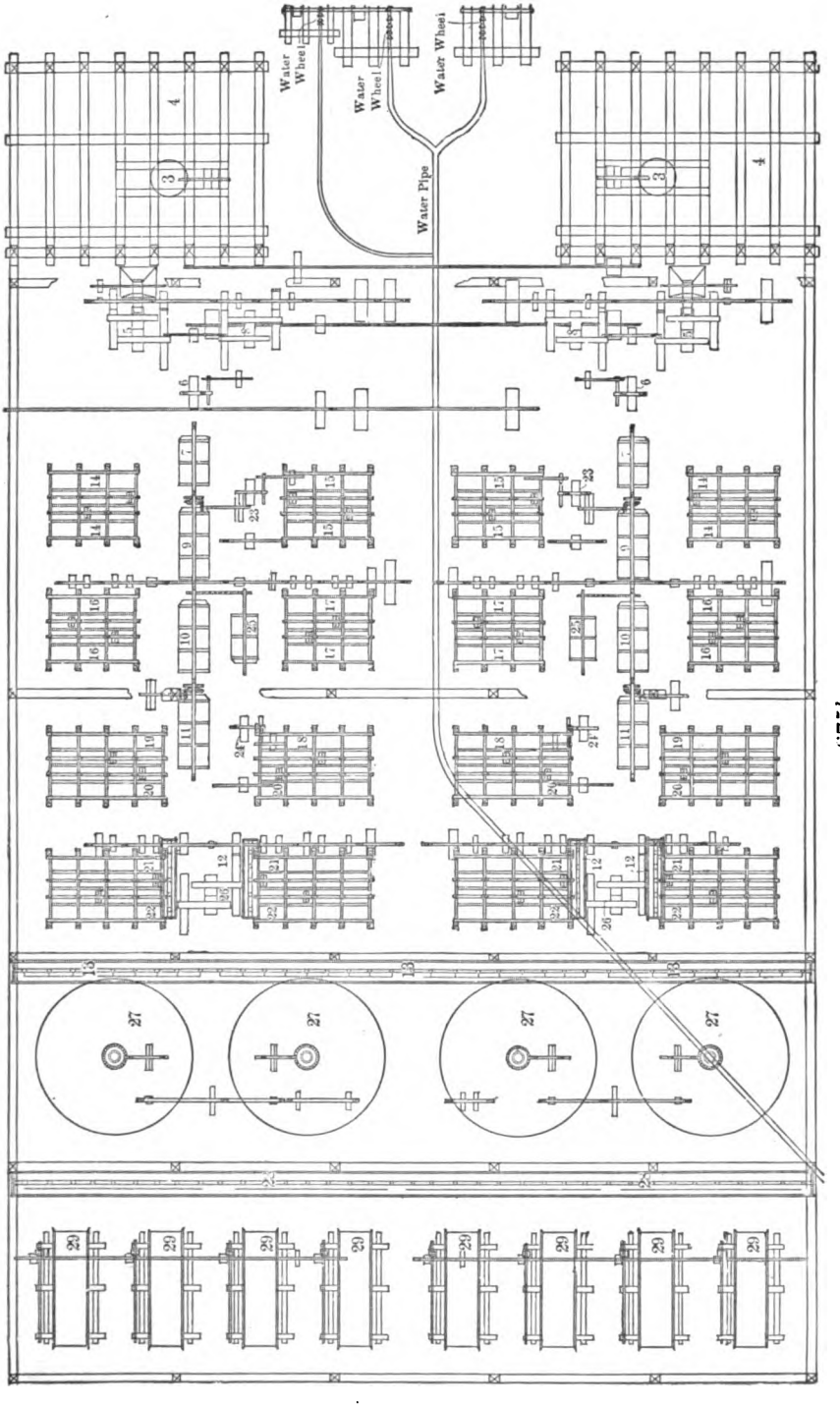

FIG. 275*b*. — PLAN.

3. Two No. 1 breakers, Gates No. 3, breaking to 1.5 inches. From deliver broken ore to (4). The breaker is sometimes placed in or near the house and here the first reduction takes place. Often, as in this case, breakers are contained in the mill building itself, but this is not advantage if the mill is situated far from the shaft. If the breaker is placed in the building, it, and all crushers, should have separate foundations from the supporting the remainder of the building, to avoid vibration. Breakers sh be set with the top flush with the floor as in Fig. 275*a*, to avoid unnecess shoveling, but this may not be necessary if the breaker is fed with an eleva or conveyor.

The breaker should be placed below the first storage bin so that an interruption in the haulage system would not leave the breaker out of ore, and accident to the breaker would not necessarily stop haulage. This bin sho hold at least 8 hours' supply of ore and at least one spare breaker should provided to keep the mill running in case of accidents to the other breake

From the breakers the ore should go to small storage bins of a few t capacity, from which to be delivered to the mill storage bins at the top of t mill building. These latter bins should hold at least 16 hours' supply.

Often enough breaking capacity is supplied so that by breaking for on 8-hour shift sufficient ore is broken to supply the mill for 24 hours.

4. Two No. 2 bins holding 300 tons each. From (2) and (3); deliver, vi two Tulloch automatic feeders, to (5). The location of the feeders at the fo of the bins is shown in Fig. 275*a*.

5. Two pairs of No. 1 rolls, 14 by 30 inches. From (4); deliver crushe ore to (6). So far everything has been carried along by gravity, but no owing to the insufficiency of the hillside slope, it becomes necessary to elevate the ore to the trommels in the upper part of the mill.

6. Two No. 1 bucket elevators. From (5) and (8); deliver to (7). It will be observed that the elevator pit is well down and even into the groun at this point. It is not advantageous to have the boot of the elevator to near the ground, as it is much easier to clean it out, if it becomes choked, whe it is built a few feet above the bottom of the pit. Plenty of room shoul always be left around the elevator boot to work in.

7. Two No. 1 trommels with 15-millimeter round holes. From (6); delive the oversize to (8) and the undersize to (9). This is the beginning of a series of screens which size the ore and prepare it for the jigs and other concentrator

8. Two pairs of No. 2 rolls, 14 by 30 inches. From (7) and (23); deliv the crushed ore to (6). As will be deduced from this all the ore must pas through the 15-millimeter trommels (7) before passing beyond this point The same elevator (6) is made to do duty for the products of both rolls, 5 and (8).

9. Two No. 2 trommels, each made in sections, the first sections having 11-millimeter and the second 13-millimeter round holes. The oversize of the 11-millimeter screens passes over the 13-millimeter screens. From (7) deliver material through 13 and on 15 millimeters to (14), material through 11 and on 13 millimeters to (15), and material through 11 millimeters to (10). These are the second and third screens in the series and deliver the first two sized products to the jigs and the undersize to the fourth screens. All the products pass through chutes by gravity to their destination.

10. Two No. 3 trommels, each made in sections, the first sections having 7-millimeter and the second 9-millimeter round holes. The oversize of the 7-millimeter screens passes over the 9-millimeter screens. From (9); deliver material through 9 and on 11 millimeters to (16), material through 7 and on millimeters to (17), and material through 7 millimeters to (11). These are

the fourth and fifth screens in the series and deliver the two sized products to jigs and the unsized products to the sixth screens. All the products pass through chutes by gravity to their destination.

11. Two No. 4 trommels, each made in sections, the first sections having 3 and the second 5-millimeter round holes. The oversize of the 3-millimeter screens passes over the 5-millimeter screens. From (10); deliver material through 7 and on 5 millimeters to (18), material through 5 and on 3 millimeters to (19), and material through 3 millimeters to (12). These are the sixth and seventh screens in the series and deliver the two sized products to jigs and the undersize to the classifiers. All the products pass through chutes by gravity to their destination.

12. Four No. 1 hydraulic classifiers with 5 spigots each. From (11) and (25); deliver the first spigot products to (20), the second and third spigot products to (21), the fourth and the fifth spigot products to (22), and the overflow to (13). These classifiers take the place of screens to prepare the finer sizes for concentration. Classifiers are used for several of the important reasons already taken up in previous chapters, and not the least important of all is the fact that screens have a very small capacity and do not do satisfactory work on the smaller sizes. They blind and are a constant source of trouble. Some of the modern belt screens might be used in such a place instead of trommels or classifiers, but they are rather expensive to operate and keep in repair and they also do not have as large a capacity as the classifiers. For these reasons, and because of the little space required by classifiers as compared with screens working on the same products, the classifiers distinctly have the advantage and are preferred to screens in such a place. The products from the screens are sized and the later separation depends on the fact that of two pieces of ore of the same size — one of galena and the other of siderite or quartz — the former is much heavier than the latter, and in the jigs the lighter comes to the top while the heavier sinks to the bottom and is removed. The classified products, on the other hand, are all of the same weight, the galena grain being smaller in size than the quartz or siderite grain. Such products do not allow as good a separation on jigs as on Wilfley tables and the tables would be used to handle them in a modern mill. All the products pass through chutes by gravity to their destination.

13. One No. 1 distributing tank with 36 spigots. From (12); delivers the products of nine spigots to each of the four upper decks of (27) and the overflow to (32). This tank serves not only to collect and distribute the pulp, but also gets rid of the excessive quantity of water in the pulp which has been applied in all the rolls and trommels which the ore has already been through. A very large proportion of this water, which has been applied chiefly as wash and spray water, finds its way with the undersizes to this tank. This tank dewaters the pulp to a certain extent and delivers it, of the proper consistency, to the revolving slime tables. The overflow water might be saved at this point for re-use by piping it to a tank or reservoir but, because there happens to be a cheap supply of water for this particular plant, it is not done here.

14. Four No. 1 3-sieve Harz jigs. From (9), fed with 13 to 15-millimeter stuff; deliver the first and second discharges which are nearly clean galena concentrates to (30), the third discharges and all the hutch products which are composed of middlings to (23), and the tailings which contain but very little mineral to (32). These jigs are fed with 13 to 15-millimeter material, the object in most ore-dressing plants being to save the mineral as coarse as possible and thus avoid the loss in slimes which is almost sure to follow fine comminution. The middlings fall by gravity through chutes to the elevators, the tailings go by gravity to (32), the concentrates are automatically discharged

by gates into boxes, from which they are usually shoveled into wheelbarrows and thus sent to their destination.

15. Four No. 2 3-sieve Harz jigs. From (9), fed with 11 to 13-millimeter stuff; make and deliver products as (14) does. The same remarks apply as under (14).

16. Four No. 3 3-sieve Harz jigs. From (10), fed with 9 to 11-millimeter stuff; deliver the first and second discharges which are nearly clean galena concentrates to (30), the third discharges and all the hutch products which are composed of middlings to (24), and the tailings which contain but very little mineral to (32). The same remarks apply as under (14).

17. Four No. 4 3-sieve Harz jigs. From (10), fed with 7 to 9-millimeter stuff; make and deliver products as (16) does. The same remarks apply as under (14).

18. Two No. 5 4-sieve Harz jigs. From (11), fed with 5 to 7-millimeter stuff; deliver the first, second, and third discharges which are nearly clean galena concentrates to (30), the fourth discharges and all the hutch products which are composed of middlings to (24), and the tailings which contain but very little mineral to (32). The remarks made under (14) apply with equal force here.

19. Two No. 6 4-sieve Harz jigs. From (11), fed with 3 to 5-millimeter stuff; deliver the first, second, and third discharges and hutch products which are nearly clean galena concentrates to (30), the fourth discharges and hutch products which are composed of middlings to (24), and the tailings which contain but very little mineral to (32). The remarks made under (14) apply here.

20. Four No. 7 4-sieve Harz jigs. From (12), fed with products from first spigots; make and deliver products as in (19). The remarks made under (14) also apply here. Under modern practice these jigs and those in (21) and (22) would certainly be replaced by Wilfley tables or tables of that type, because they do much better work on such sizes than jigs, are easily adjusted to varying conditions, have a fairly large capacity, and can be operated quite cheaply.

21. Four No. 8 4-sieve Harz jigs. From (12), fed with products from second and third spigots; make and deliver products as in (19). The remarks made under (14) and (20) also apply.

22. Four No. 9 4-sieve Harz jigs. From (12), fed with products from fourth and fifth spigots; make and deliver products as in (19). The remarks made under (14) and (20) also apply here.

23. Two No. 2 bucket elevators. From (14) and (15); deliver to (8). It will be observed that both elevators, (23) and (24), are built up higher off the floor than is (6), which is more as they should be.

24. Two No. 3 bucket elevators. From (16), (17), (18), (19), (20), (21) (22), and (26); deliver to (25). In Fig. 275*a* will be seen a small hopper built into the boot of this elevator, into which material may be shoveled after it has been removed from the elevator boot following a choke-up or something of that nature. It is also convenient to shovel in material cleaned up about the mill at this point. Obviously the slope of the hillside can have nothing to do with either (23) or (24), as they would be required even with the steepest slope. The lack of slope, therefore, has only necessitated the use of the short elevator (6).

25. Two No. 5 trommels with 3-millimeter round holes. From (24); deliver oversize to (26) and undersize to (12). These are auxiliary trommels to (11) and the products fall through chutes, aided by gravity, to their destination.

26. Two pairs of No. 3 rolls, 14 by 30 inches. From (25); deliver the crushed ore to (24). The purpose of these rolls is evident.

27. Four 2-deck, convex, revolving slime tables. From (13), fed with

the finest pulp; deliver the concentrates from both upper and lower decks, which are nearly clean galena, to (30), middlings from the upper decks to the lower decks and from the latter to (28), and the tailings from each deck, although they are probably the richest tailings leaving the mill, to (32). All the products are discharged automatically and, by gravity and water, pass through launders to their proper places.

28. One No. 2 distributing tank with 40 spigots. From (27); delivers spigots through launders by gravity to (29) and the overflows in the same way to (32). This tank, as in the case of (13), not only serves to collect and distribute the pulp but also dewaters it and delivers it, at the proper consistency, to the vanners. The overflow might be saved for re-use if desired.

29. Seven 4-foot Frue or side-shake vanners. From (28), fed with middlings from the convex round tables; deliver concentrates of nearly clean galena to (30) and the tailings, although having some values, to (32).

30. Ten No. 1 settling tanks for concentrates, holding 150 tons in total. From (14), (15), (16), (17), (18), (19), (20), (21), (22), (27), and (29); deliver the settlings via wheelbarrows to railroad cars and thence to smelter, and overflows by launders to (31).

31. One No. 2 settling tank. From (30); delivers settlings, composed of very fine rich slimes, via wheelbarrows to railroad cars and thence to smelter, and overflow by launder to (32).

32. Tailings launder. From (13), (14), (15), (16), (17), (18), (19), (20), (21), (22), (27), (28), (29), and (31); deliver to waste in creek.

This mill is divided into two halves which may be run together or independdently, and this is a good feature in mills as it facilitates repairs, experiments, etc.

The mill requires 14 men per 24 hours, divided into 2 shifts of 12 hours each: 2 foremen, 4 jig men, 2 table and vanner men, 2 breaker men, 2 trammers, 1 machinist, and 1 assayer.

Power is furnished by water coming through two ditches 1¼ miles long and a pipe 10 inches in diameter, 3,700 feet long, giving a head of 900 feet. This runs four Pelton wheels. Two of them are 6 feet in diameter, have ¾-inch nozzles, and each drives one-half the mill, being rated at 60 horse-power each. The third is 3 feet in diameter with ½-inch nozzle, rated at 30 horse-power, and drives the two rock breakers. The fourth runs a dynamo with a capacity of 75 lights.

The water for the mill is partly the waste from the Pelton wheels delivered at the level of No. 1 trommel, and is partly taken direct.

The crude ore contains 6 to 12% lead and 3 to 5 ounces silver per ton. The concentrates contain 55 to 58% lead and 16 to 20 ounces silver. The tailings contain 1¼ to 2½% lead and 1½ to 3 ounces silver. One hundred tons of ore yield about 12 tons of concentrates and 88 tons of tailings. The mill saves about 75% of the lead and 50% of the silver.

These results are all improved in the newer mill where some of the more modern concentrators are used.

§ 647. Level-Site Type Mill. — A mill built on a level site is shown in section in Fig. 276*a* and in plan in Fig. 276*b*. It is another old-style mill which was handling from 275 to 300 tons per 24 hours in the section treating ore from the company's mine, and 125 to 150 tons in the section treating the custom ores about Butte, Montana, and obtaining good results. The ore consisted of the economic minerals pyrite, sphalerite, bornite, enargite, chalcopyrite, chalcocite, tetrahedrite, and tennantite, mostly in coarse crystallization but sometimes finely disseminated, and a gangue of quartz, with some decomposed granite and a little barite. The problem was to save the copper and silver without the zinc. In the mine low-grade sphalerite containing

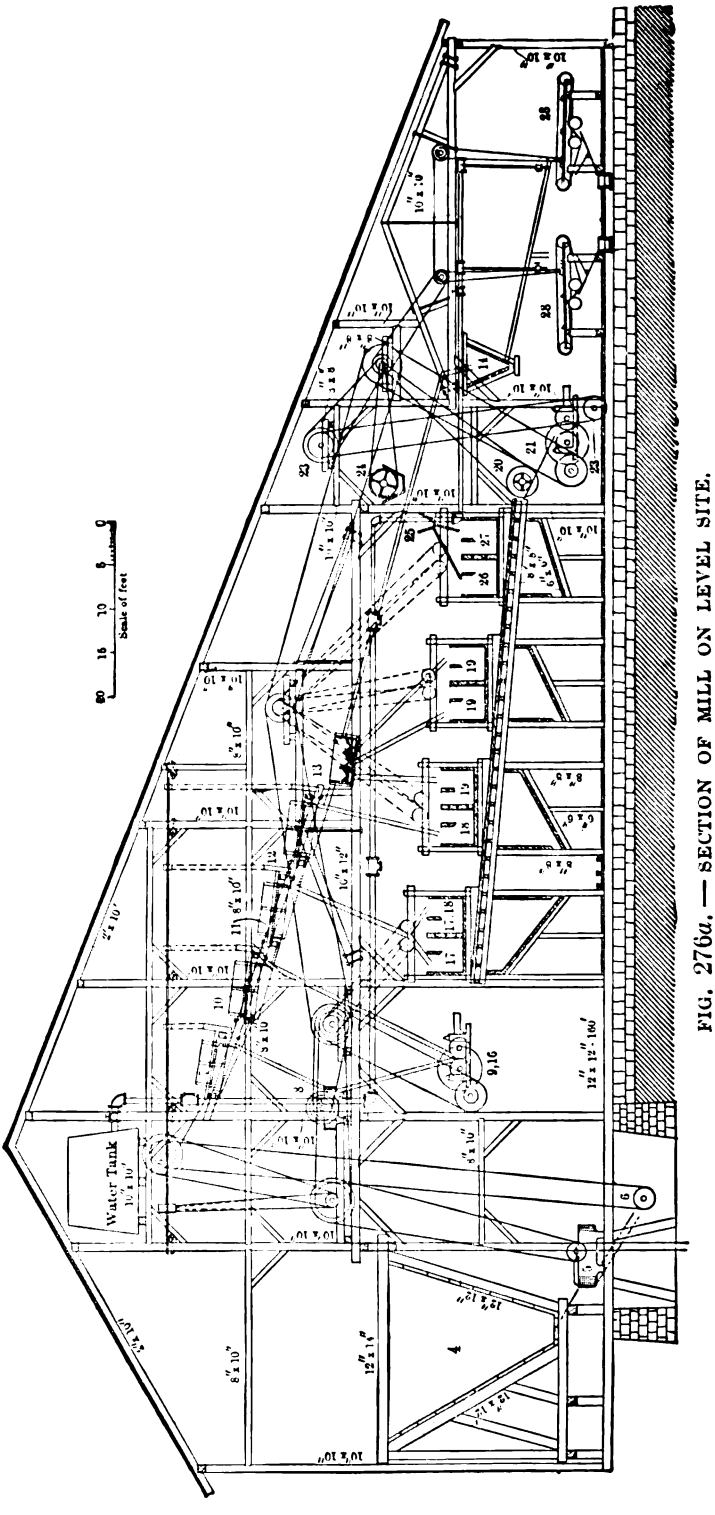

FIG. 276*a*. — SECTION OF MILL ON LEVEL SITE.

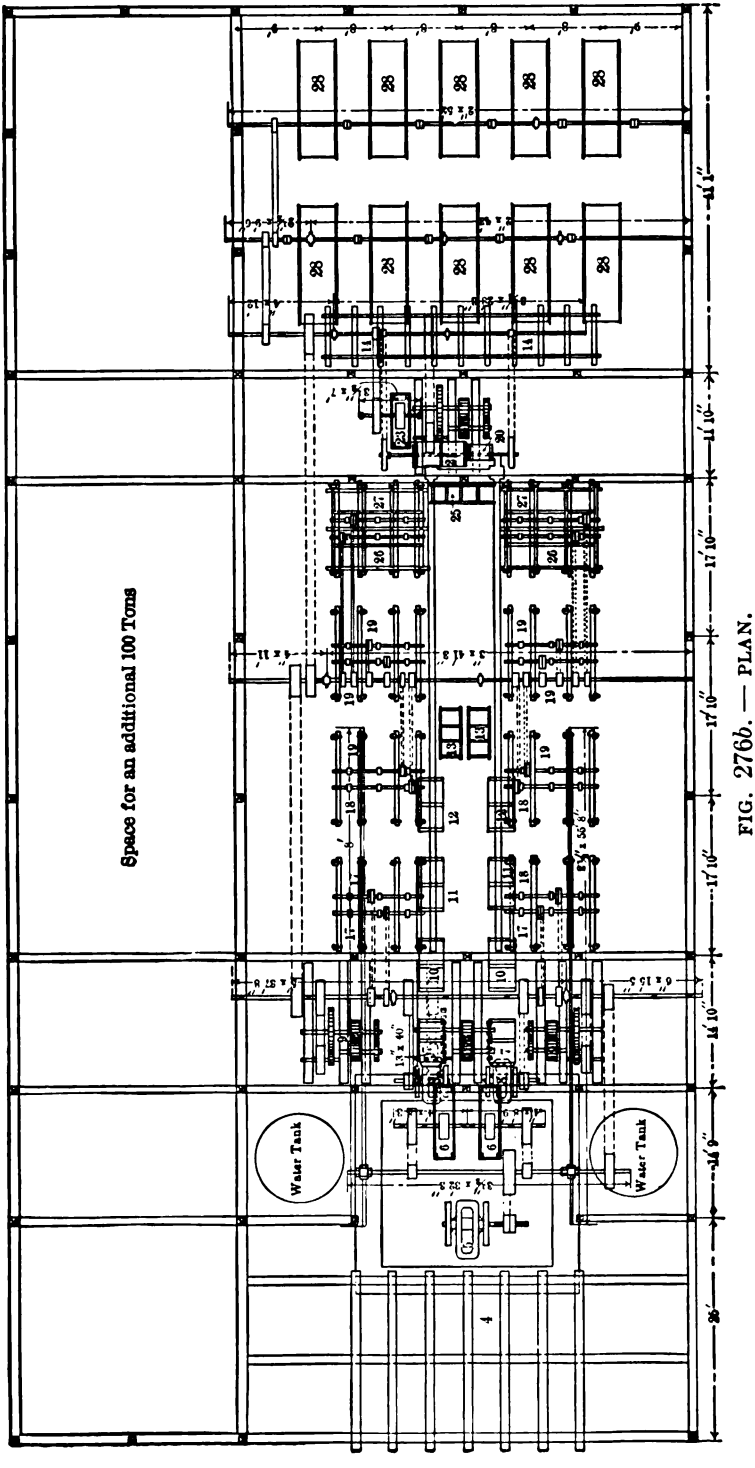

FIG. 276*b*. — PLAN.

only 10 or 20 ounces silver per ton was left awaiting a market. The rest of the material was classed into ore which was of high grade suitable to hand pick and that which was not. Both classes were hoisted and trammed in end-dumping cars holding 1,800 pounds to the rock house, the former going to (1) and the latter to (3).

Special features which were pointed out and explained in the previous mill of the hillside type will not be repeated here.

Rock House.

1. Two No. 1 grizzlies with 1.5-inch spaces between the bars. From the mine; deliver oversize to (2) and undersize to (3). In most modern mills the ore is dumped onto grizzlies, and only the coarser lumps go to the rock breakers, the finer ore passing through the gratings into bins below; this greatly lightens the duty of the breaker, but, as will be observed, it is not the method employed in this mill and in many plants this same error will be found. Usually the coarse ore from the grizzlies goes to the breaking floor and often to a storage bin for coarse ore, the gate of which opens onto the breaking floor. By keeping a constant supply of coarse ore in this way, the breaker may be kept steadily at work, and the power kept more constant, which is advantageous if the breakers and all the rest of the mill machinery are driven by the same engine or motor. This is particularly desirable in ore-dressing plants where tables and vanners are used, as these machines are most sensitive to change of power; a changeable power makes their regulation much more difficult and constant attention becomes necessary; and even under these conditions they will not do nearly as good work as when running under uniform power. Of course if the breakers are driven by a separate motive power, or all the machines are driven by individual motors, which is the modern tendency, it does not make so much difference whether the breakers are run constantly or not.

2. Two picking floors. From (1); clean smelting ore (copper, zinc, and silver) go by teams to the smelter; pure zinc ore (zinc and silver) are sent to a separate smelting treatment, the waste is sent to the dump, and the residue or concentrating ore goes to (3). All the products, except the last, are hand-picked.

3. Two No. 1 or rock-house bins, each 60 feet long, 13 feet wide, with bottoms sloping 52°, and holding 650 tons each. From the mine, (1), and (2); deliver, via gate and chute, to 4-horse wagons, holding 5.5 tons each, thence 2 miles to (4). Bins are sometimes built flat-bottomed, which necessitates shoveling the ore to empty the bin, thus offsetting the increased capacity, and in case the bin must often be emptied, as in the case of custom work, becomes a disadvantage. If the bin can be left full, however, the ore forms a bottom along the angle of slope at which the ore runs, and in this way the ore falls on itself and the extra cost of linings, new bottoms, etc., is done away with and the flat-bottomed bin becomes a distinct advantage.

Mill.

4. Four No. 2 or receiving bins, two of them holding 150 tons each for the company's ore and two holding 200 tons each for custom ore. From (3); deliver by gate and chute to (5). The sills of the framework of bins should all be on the same terrace along the slope and should never be set on different levels. The bottom timbers are usually set sloping at an angle of about 45° towards the gate, so that the ore will run down to the gate by its own weight. Bins are usually double-boarded with heavy planks, a layer of building or tarred paper being placed between the planks, to prevent the loss of fines. The inside bottom planks should be laid lengthwise down the slope as they wear better

and the ore slides more readily in this manner. Beech, birch, and oak make the best wooden bottoms, for they become smooth from wear as the ore slides over them. At the larger plants the bins are frequently lined with iron plates which should be renewed as fast as they wear out. Since ore slides better on iron than on wood it becomes possible to give the bottoms of the bins lined with iron a slope of only 35° and thus increase the capacity somewhat. Cylindrical tanks, or bins made of sheet iron or concrete, having conical bottoms lined with iron, are now fast gaining in favor.

From this point on only the company's section of the mill will be described. The other section is an exact duplicate of it.

5. One No. 1 Blake breaker, 9 by 15 inches, breaking to 2 inches. From (4); delivers broken ore to (6). Gyratory breakers seem to find more favor than the jaw breakers in modern mills, partly on account of their large capacity and partly because of the comparatively little jar and vibration. The gyratory breakers do not tax the motive power as much as the jaw breakers in that the former do work all the time while the latter are intermittent machines constantly overloading and underloading the engine or motor. In small plants the power required by the breaker is often as much as one-quarter of the total power of the mill.

6. Two No. 1 bucket elevators. From (5), (9), and (16); deliver to (7). Up to this point the ore has traveled by gravity; but now comes the great disadvantage of a level site as the ore must be lifted by very long and ungainly elevators to the top of the mill and the mill must needs be unduly high at this point. Long inclined conveyors may be employed to do this work if the previous operations have been carried on in a building somewhat apart from the rest of the mill.

7. Two No. 1 trommels with 20-millimeter round holes. From (6); deliver oversize to (8) and undersize to (10).

8. Two No. 2 Blake breakers, 7 by 10 inches, breaking to 1 inch. From (7); deliver the broken ore to (9).

9. Two pairs of No. 1 rolls, 16 by 30 inches, set $\frac{1}{8}$ inch apart. From (8); deliver crushed ore to (6).

10. Two No 2. trommels with 7-millimeter round holes. From (7); deliver material through 20 and on 7 millimeters to (15) and material through 7 millimeters to (11).

11. Two No. 3 trommels with 4.5-millimeter round holes. From (10); deliver material through 7 and on 4.5 millimeters to (17) and material through 4.5 millimeters to (12).

12. Two No. 4 trommels with 3-millimeter round holes. From (11); deliver material through 4.5 and on 3 millimeters to (18) and material through 3 millimeters to (13).

13. Two No. 1 hydraulic classifiers, each with four spigots. From (12); deliver the spigot products to (19) and the overflows to (14).

14. Two No. 1 whole-current box-classifiers in series with 8 spigots in each. From (13) and (25); deliver the spigot products to (28) and no overflows are made.

15. Two No. 1 1-sieve Harz jigs. From (10), fed with through 20 on 7-millimeter stuff; deliver discharges to (29), hutch products to (20), and tailings to (16). At this point the students' attention is called to the fact that in the hillside type of mill described the first and all succeeding concentrators made finished tailings and only the middlings had to be re-treated. In this case not only are the middlings from all the concentrators re-treated, but the tailings from the first three sets of jigs are also re-crushed and re-treated in a manner analogous to the treatment given the middlings. These two

methods represent extremes in both cases and many combinations of the two are found in practice.

16. One pair of No. 2 rolls, 16 by 30 inches, set $\frac{1}{16}$ inch apart. From (15) deliver the crushed product to (6).

17. Three No. 2 3-sieve Harz jigs. From (11), fed with through 7 on 4.5-millimeter stuff; deliver discharges and hutch products to (31) and tailings to (20).

18. Three No. 3 3-sieve Harz jigs. From (12), fed with through 4.5 or 3-millimeter stuff; make and deliver products as in (17).

19. Six No. 4 3-sieve Harz jigs. From (13), fed with spigot products: deliver the first and second discharges and all the hutch products to (31); the third discharges to (20), and the tailings to (35). These are the first tailings discarded in this mill as worthless.

20. One dewatering trommel with 2.5-millimeter round holes. From (15), (17), (18), (19), (26), and (27); delivers oversize to (21) and undersize to (22). This merely serves to get rid of the excess of water before subjecting the material to re-crushing.

21. One pair of No. 3 rolls, 16 by 30 inches, set close together. From (20) and (24); deliver the crushed product to (23).

22. One No. 1 dewatering box. From (20); delivers the spigot product to (23) and the overflow is clear water which is re-used in the mill. This is a case where water is not so plentiful but that it pays to save and re-use it.

23. One No. 2 bucket elevator. From (21) and (22); delivers to (24). This elevator would probably be required regardless of whether the mill was erected on a hillside or not.

24. One No. 5 trommel with 3-millimeter round holes. From (23); delivers oversize to (21) and undersize to (25).

25. One No. 2 hydraulic classifier with two spigots. From (24); delivers the first spigot product to (26), the second spigot product to (27), and the overflow to (14).

26. Two No. 5 3-sieve Harz jigs. From (25), fed with first-spigot products: deliver the first and second discharges and hutch products to (30), the third discharges and hutch products to (20), and the tailings to (35).

27. Two No. 6 3-sieve Harz jigs. From (25), fed with second-spigot products; make and deliver products as in (26).

28. Sixteen 4-foot Frue or side-shake vanners. From (14), fed with fine material; deliver concentrates to (30) and tailings to (36).

29. One pair of No. 4 rolls, 14 by 27 inches. From (15); deliver the crushed product to (32).

30. One No 3 bucket elevator. From (26), (27), and (28); delivers to (31).

31. One No. 4 bucket elevator. From (17), (18), (19), (30), and (33); delivers to (32).

Elevators (30) and (31) could be done away with if the mill was situated on a hillside with sufficient slope.

32. Fourteen No. 1 settling tanks for concentrates, holding 100 tons each, used in rotation. It takes 24 hours to fill a tank, 48 hours to settle and drain it, and 24 hours to discharge. From (29) and (31); deliver settlings containing 4% moisture, by cars holding 1.5 tons, to smelter; overflow and drainings to (33).

33. No. 2 settling tanks, three tanks in series. From (32); deliver spigot products to (31) and overflows to (34).

34. One No. 5 bucket elevator lifting water to a tank which supplies the jigs and vanners. From (33). This tank can be seen near the top of the mill in Fig. 276*a*. In most mills the water supply flows into wooden or iron tanks and is drawn from them as needed. This always guarantees a constant head of water, and furnishes a reserve supply of several thousand gallons. Often two tanks are employed, one of which is filling while the other is in use,

but this is not good practice as the pressure is constantly changing under such conditions. Sometimes the water tanks are placed out of doors on the ground, but this is not practicable in cold countries where freezing is liable to occur. If they are placed in the mill building they should be put in a separate room having its floor sills independent of the main framework of the structure, or they should at least be set on independent timbers, as the jar of the machinery, especially of the breakers, is liable to set the water in the tanks into sympathetic vibration which might result disastrously to the frame of the mill building.

35. One No. 6 bucket elevator. From (19), (26), and (27); delivers to (36). This elevator is required because of the lack of slope and would not be needed in a mill of the hillside type.

36. Tailings launder, 1,100 feet long. From (28) and (35); delivers to waste.

In a modern mill jigs (19), (26), and (27) would probably be replaced by Wilfley tables or tables of that type.

In order that everything may be performed automatically in this mill attention is called to elevators (6), (23), (30), (31), and (35) which would not be needed if the mill were located on a steep hillside. This extra elevating is costly and troublesome in many ways and should be avoided as much as possible.

The mill employs 23 men per 24 hours, divided into two shifts of 12 hours each: 2 engineers, 2 firemen, 2 foremen, 2 breaker men, 4 jig men, 2 vanner men, 2 pump men, 3 trammers, 2 oilers, 1 weigher, and 1 roustabout. Wages vary from $3 to $4.50 per shift.

Power is furnished by 3 fire-tube boilers, 16 feet long, 54 inches diameter, with tubes 3½ inches in diameter, running under a pressure of 100 pounds per square inch and burning 6.6 tons of coal per 24 hours; and a tandem compound-condensing Corliss engine with high-pressure cylinder, 14 × 42 inches, and low-pressure, 24 × 42 inches, making 81 revolutions per minute and rated at 200 horse-power, with steam pressure at 95 pounds and a vacuum of 21¾ inches of mercury. The high-pressure cylinder cuts off at ⅓ stroke. The mill and dynamo require 171 to 177 horse-power.

The water is obtained principally from Black Hill Creek, being pumped 2,800 feet and to a height of 90 feet through a 10-inch pipe by a No. 5 Roots rotary pump driven by a 60 horse-power electric motor making 600 revolutions per minute and using 50 amperes at 350 volts. The current is transmitted 2,800 feet through No. 2 copper wire from a direct-current dynamo driven by the mill engine, making 600 revolutions per minute, and delivering 50 amperes at 550 volts. When necessary, water is taken from Silver Bow Creek, but this is objectionable as it has been already used by several mills above. The amount of water pumped to the mill is 864,000 gallons per 24 hours, and in addition 200,000 gallons are re-elevated by No. 5 elevator (34). The mill water is received in a tank at the top of the mill and part of it flows from this tank through the condenser for the engine and back to another tank which supplies the jigs and vanners.

Assays are as follows:

	Copper. Percent.	Silver. Ounces per Ton.	Zinc. Percent.	Gangue. Percent.
Picked smelting ore	18 to 22	25 to 30	5 to 7	30 to 35
Concentrating ore	4.5 to 5.5	8 to 10	6 to 8	60 to 65
Concentrates	10 to 12	18 to 24	8 to 12	15 to 71
Tailings	1.5 to 1.8	2.5 to 3	.....	.....

One hundred tons of ore from the mine yield about 3 tons of hand-picked copper smelting ore, less than ½ ton of hand-picked zinc ore, and about 96 tons of concentrating ore which yields 32 tons of concentrates and 64 tons of tailings. The mill saves 80 to 85% of both the copper and silver.

MODERN ORE-DRESSING PLANTS.

§ 648. From what precedes the student already understands that the object of ore-dressing mills is to get the values into condensed bulk and thus diminish the trouble and expense of shipping and other treatment of waste rock. Such mills do not, of course, extract the metals from the ore; this being left for the smelters to do and belongs in Metallurgy rather than in Ore Dressing.

The operation is purely mechanical and as near continuous and automatic as possible in order to save the expense of labor which is one of the largest and most costly items of milling. The ore and gangue are merely separated and freed from one another by crushing, and the gangue, because of its lightness, is washed away. Since the whole operation is based on crushing and sizing it is evident that these things are very important and should be performed with the greatest care consistent with rapid and satisfactory work.

As the grade of the ore improves, other conditions remaining the same, the loss in the tailings increases; but if they contain only gold or silver values and are very rich they may be susceptible to a further extraction of the values by the chlorination or by the cyanide processes.

From 75 to 80% of the water used in ordinary milling operations can be saved for re-use at a comparatively slight expense. This is always done in dry climates and where water is scarce.

§ 649. Items of Interest in Ore Dressing. — In handling any copper ore, the object is to produce a suitable product for the copper smelter. In this case pyrite or marcasite are not undesirable as they may assist in forming the matte, and the iron is useful in the subsequent processes of treating the matte. In concentrating tin, lead, or zinc ores the different minerals must be separated, for iron and lead quickly destroy the retorts of clay in which the zinc is treated; while zinc in a lead furnace renders difficult the smelting and tends to carry off both silver and lead as fumes or to carry them into the slag. In order to more thoroughly acquaint the student with milling methods some modern ore-dressing plants will now be described in detail.

§ 650. Having described two model mills and the application of the various concentrating machines to the process of ore dressing it is fitting that a number of modern mills be next given, and, with this end in view, the author has selected and described at least one of the most approved processes employed in concentrating the ores of the important mining districts of the United States. When several methods are employed, while handling the same ore, the attention of the student will be called to it in the proper place, and the application of any device not already made clear will be pointed out wherever it occurs.

§ 651. Methods of Study. — The outlines as presented in this chapter are so intricately involved with detail that the author will, at this point, give the key or method of analysis which he has found best adapted to simplify the study of the same. After getting the process in mind by use of the key the student may then, with a great deal of profit, turn to the details of the schemes which contain so many good points that it is not deemed wise to omit them altogether.

The key or method of analyzing the mill schemes as used by the author is first to set all the screen sizes or classifiers in a column. Follow each with the concentrating machine to which the coarser size goes, and then in a third column give the products made by each concentrator. In a fourth column give the crusher to which the middlings go, and in the fifth the maximum size of grain to which each crusher is set to crush. In a final column set down the name of the concentrator to which the re-crushed products go. In order to make this method of study clear two outlines have been arbitrarily selected

as examples of typical mills. In these keys the machine numbers used are the same as are used in the detailed outlines which will be found for comparative study under the mills themselves. After a study of these keys and their connection with the detailed flow sheets, further investigation of other schemes should be a comparatively easy task.

KEY TO THE OUTLINE OF THE MILL OF THE BUNKER HILL AND SULLIVAN MINING AND CONCENTRATING COMPANY.

Screens and Classifiers.	Concentrators.	Products.	Breaker or Crusher.	Limit of Crushing.	Destination.
(2) On 31.75 mm			(3) Comets		(4)
	(4) Picking belt	Smelting ore *			
		Milling ore	(5) Rolls		(13)
(13) " 36.00 mm			(14) Rolls		(13)
		Hutches			(13)
(13) " 18.00 mm	(16) Jigs	Concentrates	(33) Huntington mill	0.8 mm.	(35)
		Concentrates	(17) Rolls		(13)
		Tailings*			
		Hutches			(13)
(18) " 10.00 mm	(19) Jigs	Concentrates *			
		Concentrates	(22) Rolls		(13)
		Tailings*			
		Hutches			(13)
(20) " 7.00 mm	(21) Jigs	Concentrates *			
		Concentrates	(39) Huntington mills	1.5 mm.	(67)
		Tailings*			
		Hutches			(13)
(20) " 3.00 mm	(23) Jigs	Concentrates *			
		Concentrates			(29)
		Tailings*			
		First spigots			(25)
(24) Through 3.00 mm		Second spigots			(26)
		Third spigots			(27)
		Fines			(40)
		Concentrates *			
	(25), (26), and (27) Jigs	Middlings			(67)
		Tailings *			
(29) On 3.00 mm			(30) Huntington mills	1.5 mm.	(29)
(29) Through 3.00 mm					(24)
		Concentrates *			
	(35) Wilfley tables	Middlings			(45)
		Slimes *			
		Tailings			(37)
		Middlings			(45)
	(37) Wilfley table	Concentrates *			
		Tailings			(67)
		Slimes *			
(40) Spitzkasten		Coarse			(41)
		Fines			(43)
		Concentrates			(45)
	(41) Wilfley table	Middlings			(67)
		Tailings *			
		Slimes			(63)
	(43) Vanners	Concentrates			(45)
		Tailings			(63)
		Concentrates *			
	(45) Wilfley tables	Tailings			(67)
		Slimes *			
	(63) Sand traps	Coarse			(65)
		Fines			(64)
	(64) Vanners	Concentrates *			
		Tailings *			
		Concentrates *			
	(65) Wilfley tables	Middlings			(84)
		Tailings *			
		Slimes			(63)
	(67) Slough-off tank	Coarse			(68)
		Fines			(63)
(68) On 0.54 mm			(69) Huntington mills	0.8 mm.	(71)
		Concentrates *			
(68) Through 0.54 mm	(80) Wilfley tables	Middlings			(84)
		Tailings *			
		Slimes			(63)
(72) On 0.58 mm			(69) Huntington mills	0.8 mm.	(71)
		Concentrates *			
(72) Through 0.58 mm	(76) Wilfley tables	Middlings			(84)
		Tailings *			
		Slimes			(63)
		Concentrates *			
	(84) Wilfley tables	Middlings	(69) Huntington mills	0.8 mm.	(71)
		Tailings *			

* Indicates a finished product.

KEY TO THE OUTLINE OF THE MILL OF THE BOSTON AND MONTANA COPPER AND SILVER MINING COMPANY.

Screens and Classifiers.	Concentrators.	Products.	Breaker or Crusher.	Limit of Crushing.	Destination.
(4) On 38.1 mm	(5) Picking belts	Smelting ore *			
		Milling ore	(6) Blake	38.1 mm	(7)
(7) " 38.1 mm			(8) Blakes	22.2 mm	(10)
		Concentrates *			
(10) " 22.2 mm	(15) Harz jigs	Middlings			(17)
		Tailings	(16) Rolls	8.0 mm	(10)
		Concentrates *			
(11) " 8.0 mm	(17) Harz jigs	Middlings			(21)
		Tailings	(20) Rolls	8.0 mm	(10)
		Concentrates *			
(13) " 5.0 mm	(21) Evans jigs	Concentrates *			
		Tailings	(27) Rolls	2.5 mm	(26)
		Concentrates *			
(14) " 2.5 mm	(22) Evans jigs	Concentrates *			
		Tailings	(27) Rolls	2.5 mm	(26)
(26) " 2.5 mm			(27) Rolls	2.5 mm	(26)
		Coarse			(30)
(29) Through 2.5 mm		Fines			(36)
		Slimes			(63)
		Coarse			(32)
(31) " 2.5 mm		Fines			(59)
		Slimes			(63)
		Concentrates *			
	(30) Evans jigs	Middlings	(47) Huntington mills	1.25 mm	(50) and (52)
		Tailings *			
		Middlings			(36)
		Concentrates *			
	(32) Evans jigs	Middlings	(47) Huntington mills	1.25 mm	(50) and (52)
		Tailings *			
		Concentrates *			
	(36) Wilfley tables	Middlings			(38)
		Tailings *			
		Slimes			(63)
	(38) Frue vanner	Concentrates *			
		Tailings *			
(50) and (52) Through 1.25 mm		Coarse			(51) and (53)
		Fines			(59)
(59) On 2.0 mm					(51)
(59) Through 2.0 mm					(36)
		Concentrates *			
	(51) and (53) Evans jigs	Middlings	(47) Huntington mills	1.25 mm	(50) and (52)
		Tailings *			
	(63) Evans tables	Concentrates *			
		Tailings *			

* Indicates a finished product.

§ 652. THE CENTRAL MILL OF THE NORTH STAR MINES COMPANY, GRASS VALLEY, CALIFORNIA. — This mill having a capacity of 135 tons per 24 hours is given to illustrate the Western gold practice. The ore consists of the economic minerals, fine free gold and auriferous pyrite disseminated in a quartz gangue. The country rock is diabase. Fig. 277 shows a graphical flow-sheet of the mill.

The ore is hand-picked in the mine into clean waste and milling ore, both of which are hoisted separately in skips holding 3 tons each. Waste rock goes to the dump and milling ore to (1).

1. Wooden bin with a capacity of 150 tons. From the mine; delivers to (2).

2. Electric train; made up of fourteen 2.5-ton cars. Two hours' work per day with this train keeps the mill supplied with ore. The train hauls ore to other mills and also handles waste and concentrates. From (1); delivers to (3).

3. Grizzlies with 1.5-inch spaces between the bars, which are of iron 0.875 inch wide on top, tapering to 0.625 inch on the bottom, 2 inches deep, and 32 feet long. From (2); deliver oversize to (4) and undersize to (6).

4. Two masonry mill bins, each having a capacity of 40 tons. From (3); deliver to (5).

5. Blake breaker, with a 9 by 15-inch jaw opening, making 300 thrusts

per minute, having a capacity of 8 tons per hour, and requiring 20 horse-power to operate. From (4); delivers crushed ore to (6).

6. Masonry mill bins, each having a capacity of 175 tons. From (3) and (5); deliver, via 8 gates and feeders, to (7).

7. Forty stamps, built by the Union Iron Works. They are arranged in eight 5-stamp batteries, weigh 1,050 pounds each, and drop 96 times per minute through a height of 8 inches. When chrome-steel shoes and dies are used they wear down about 0.083 inch per day. Cast-iron dies wear about 0.167 inch per day. Mortars rest on masonry foundations with rubber sheeting

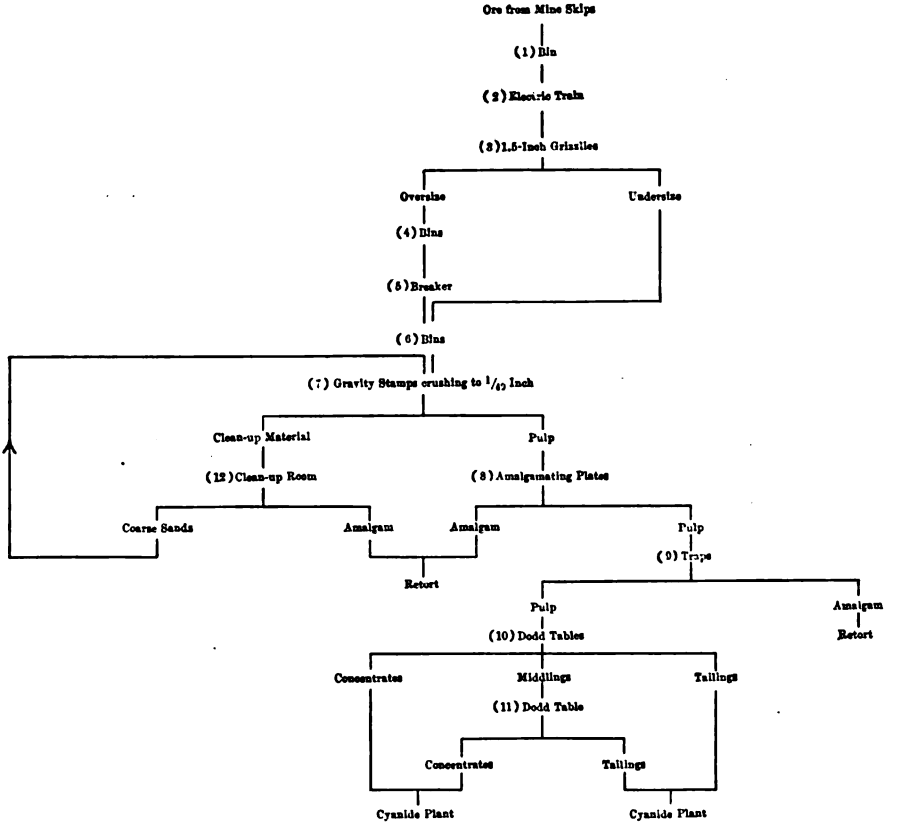

FIG. 277.

0.03 inch thick between the two. Battery frames are of steel. The screens are made of very thin sheet steel, 10 × 50 inches, punched with 400 round holes per square inch, the holes being 0.025 inch in diameter. A space of solid metal is left around each square inch and prevents breaking the screen. The life of these screens is three times that of the ordinary variety and there is no blinding of the holes. Stem guides, bored 0.031 inch wider than the stems, have given fine satisfaction. The 40 stamps require a maximum of 96 horse-power to operate. From (6) and (12); deliver pulp to (8) and clean-up material to (12).

8. Eight silvered copper amalgamation plates, 18 feet long by 4 feet wide

and turned up 2 inches on either side to make them 44 inches wide. The bend in the plates is in the shape of a curve rather than a corner and this allows for expansion without bulging. From (7); deliver amalgam to retort and pulp to (9).

9. Eight mercury traps. These are simply holes in the concrete floor. From (8); deliver amalgam and mercury to retort and pulp to (10).

10. Eight Dodd tables built by the Union Iron Works and having a capacity of about 20 tons per day each. From (9); deliver concentrates to cyanide plant, middlings to (11), and tailings to cyanide plant. These tables are similar in action to the Wilfley tables.

11. One Dodd table with details same as (10). From (10); delivers concentrates to cyanide plant and tailings to cyanide plant. (10) and (11) require 8 horse-power.

12. Clean-up room containing an inclined bowl-shaped ball grinder, concrete clean-up tanks, and concrete settling tank. From (7); delivers amalgam to retort and coarse sands to (7).

The mill cost, including excavation expenses of $18,000, was $74,600.

The ore contains from 0.4 to 1.5 ounces gold per ton, averaging about 0.6 ounce. The gold is 876 parts fine. The concentrates, representing 2% of the weight and 8% of the values, assay 3 ounces gold per ton. The mill tailings from the cyanide mill represent about 98% of the weight and 4% of the values and assay about 0.24 ounce gold per ton. Seventy-nine percent. of the values in the ore are recovered by amalgamation, and of this 25% is saved in the batteries and 75% on the plates and in the traps.

Power and Water.

The water supply for the mill is taken from the main water system, through a 26-inch Pelton wheel, with a 0.625-inch nozzle, which drives the rock breakers.

The water from the wheel is delivered to a masonry tank which supplies battery water, etc. The stamps are driven by a 75 horse-power induction motor located above the ore bins (6). The tables are driven by a 10 horse-power motor located on the concentration floor.

Labor and Wages.

The mill runs three 8-hour shifts per day, 7 days in the week. The following labor is employed:

3 Amalgamators receiving	$100.00	per month.
3 Vanner men receiving	3.00	" day.
1 Rock-breaker man receiving	2.50	" "
1 Foreman receiving	125.00	" month.

Costs.

Table 120 shows the work performed by the company while operating one shaft during August, 1904, and it also gives the detailed costs of operating which are about average for the district.

§ 653. HOMESTAKE MINING COMPANY, LEAD, SOUTH DAKOTA. — The Homestake Mining Company owns or controls 250 claims, comprising 2,616 acres and covering about 8,000 feet along the strike of the lode. It owns and operates 6 stamp mills, containing an aggregate of 1,000 stamps, and crushes about 4,000 tons per 24 hours. The unique features in these mills are the construction of the stamps, the great length of the amalgamation plates, the absence of concentration, and the treatment of the sands and slimes in the cyanide plants. The flow-sheet of this mill, graphically depicted in Fig. 278,

TABLE 120. — OPERATIONS AND COSTS AT GRASS VALLEY, CALIFORNIA, IN AUGUST, 1904.

	Stoping.	Drifting.	Stoping and Drifting.
Tons of ore mined (quartz milled)	3,689	811	4,500
Tons of waste mined	658	1,399	2,057
Tons of ore and waste hoisted	4,347	2,210	6,557

417 Feet Drifted Between 30th and 40th Levels.	Per Ton of Quartz.	Per Foot Drifted.	Per Ton Quartz.
Mining, beaking — Labor	$0.64	$3.05	$0.83
Mining, beaking — Powder, candles, etc.	0.22	2.02	0.36
Machine drills — Labor, power, supplies	0.41	1.46	0.49
Tools, etc. — Labor and supplies	0.14	0.41	0.16
Timbering — Labor and supplies	0.11	0.46	0.14
Tramming — Labor, supplies, and power	0.80	1.64	0.82
Hoisting	0.27	1.16	0.34
Blacksmiths and mechanics	0.21	0.87	0.26
Total mining	$2.80	$11.07	$3.40
Pumping	0.51	2.15	0.63
Miscellaneous and general	0.25	1.04	0.31
Office and superintendence	0.16	0.53	0.18
Total contingent	$0.92	$3.72	$1.12
Hauling	0.09	.....	0.09
Milling	0.46	.....	0.46
Cyaniding	0.35	.....	0.35
Total milling	$0.90	.....	$0.90
Grand total	$4.62	$14.79	$5.42
Grand total per ton of ore hoisted	$3.92	.....	$3.72

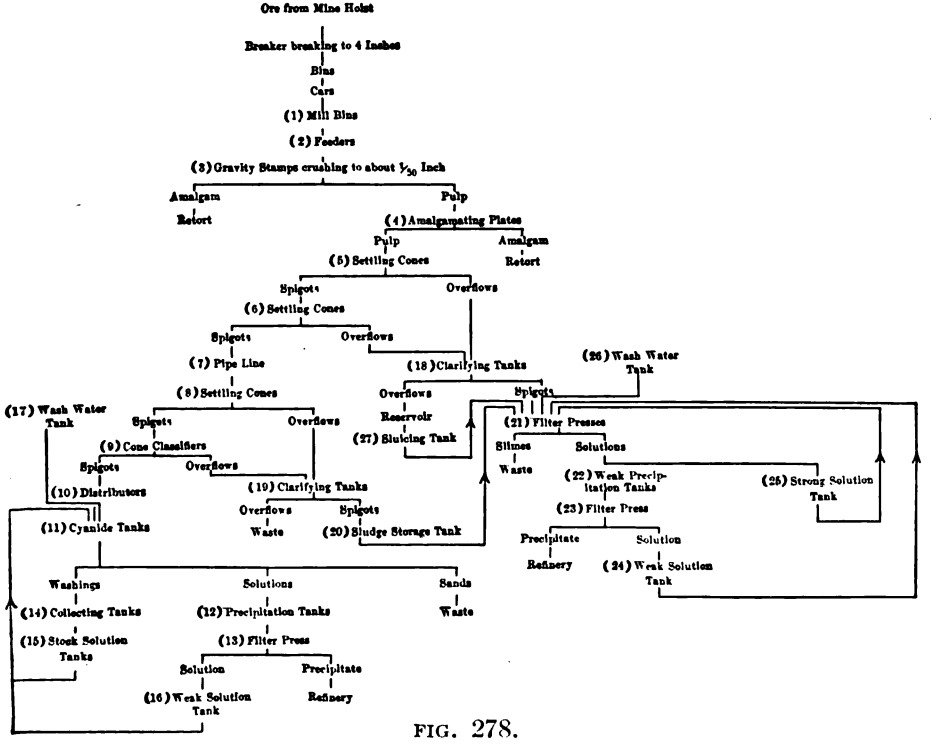

FIG. 278.

is placed here to give the student an idea of modern cyanide practice, although this is slightly trespassing upon the field of Metallurgy.

The ores treated are of two types, the oxidized, or open-cut ore, and the sulphide, or Homestake lower-level ore, containing 7 or 8% of sulphides, mainly pyrite and pyrrhotite in approximately equal proportions, together with small amounts of chalcopyrite and arsenopyrite in a gangue of schist or slate. Each class of ore is treated in separate mills, the former in the Pocahontas mill (100 stamps), while the latter class is treated in the Homestake mill (200 stamps), Golden Star mill (200 stamps), Amicus mill (240 stamps), Monroe mill (100 stamps), and the Mineral Point mill (100 stamps).

The ore receives its first breaking in rotary breakers at the hoists. It is here reduced to a maximum of 4-inch cubes. A second breaking at the Ellison hoist is now being arranged for. It is conveyed from the hoist bins in cars and dumped to (1).

1. Mill bins. From cars; deliver, via chutes, to (2).

2. Two hundred feeders. From (1); deliver to (3).

3. One thousand stamps comprising 200 batteries. These stamps are equipped with Homestake narrow-pattern mortars which are only 12 inches wide at the lip. When new the stamps weigh 900 pounds; they drop 10.5 inches and make 88 drops per minute. The shoes and dies are made of cast iron. From 10 to 12 tons of water are used per ton of ore crushed and mercury is introduced into the mortars. The stamp duty is 4 tons per stamp per 24 hours. The pulp is very fine, about 80% passing a 100-mesh screen and nearly 60% passing a 200-mesh screen. The screens are the steel needle-slot type, No. 8 size. Discharge is 11 inches above the top of the dies. From (2); deliver pulp to (4) and amalgam to retort.

4. Two hundred sets of amalgamating plates. Each set is composed of 4 plates, 4.5 × 12 feet and 0.125 inch thick, the apron plate being of copper and the other three being silver-plated copper (2 ounces of silver per square foot). It has been found that maximum results in amalgamation are attained when the temperature of the water is low enough to exert a minimum influence upon the minerals. Between 70 and 75% of the values are extracted. The total average cost of milling the ore is 44 cents per ton, although in the Amicus mill, which is the largest and most modernly equipped, the present cost is estimated at 22 cents per ton, of which 18 cents is apportioned to crushing and 4 cents to amalgamation. From (3); deliver pulp to (5) and amalgam to retort.

Slimes and Sand Separation.

The pulp as it comes from the mills has a consistency of about 12 parts water to 1 part solids. Of these solids about 65% is leachable material and 35% is slimes or unleachable material. In order to effectively treat the pulp with cyanide it is necessary to separate the slimes from the sands. This is effected by a system of settling cones and classifiers. The first treatment of the pulp takes place at the stamp mills in what is called the Upper Cone House, whence it is conveyed, by a 12-inch pipe, to Cyanide Sand Plants No. 1 and No. 2 respectively, where it receives further separation before the cyanide treatment. The pulp from Lead City mills goes to (5).

5. Sixteen gravity settling cones. These cones are of iron, 10 feet in diameter at the top and have sides sloping at 50°. The overflows have a consistency of about 30 parts water to 1 part solids, the solids all passing 200 mesh. From (4) (640 stamps); deliver spigots to (6) and overflows to (18).

6. Twelve gravity settling cones. These cones are 7 feet in diameter, otherwise the same as (5). The overflows are similar to those from (5). From (5); deliver spigots to (7) and overflows to (18).

7. Pipe line, 0.25 mile long with a minimum grade of 2.5%. Pipe is 12 inches in diameter, flanged, and of cast iron. From (6); delivers to (8).

Cyanide Sands Plant No. 1. Capacity 1,800 tons per 24 hours.

8. Nine gravity settling cones which are identical with (6). From (7); deliver spigots to (9) and overflows to (19).

9. Thirty-six cone classifiers, 3.5 feet in diameter, and equipped with a special design of feed-water inlet for discharging sands and admitting the water (an invention by Mr. Merrill).

The spigot product thus obtained is a leachable material, although containing considerable fines, but free from mud. Six tests show coarse (remaining on 100 mesh) 34%, middles (100 to 200 mesh) 33%, and fines (passing 200 mesh) 33%. It contains 10 to 12% of pyrite. Lime is added at this time, between 3 and 5 pounds being used per ton of mixture. The lime is only of the purest, any magnesia being objectionable. It is crushed in a stamp battery equipped with a wire screen having 0.172-inch square perforations. From (8); deliver spigots to (10) and overflows to (19).

10. Two distributors of the Butters and Mein type. One is used for each row of vats. From (9); deliver to (11).

11. Twenty cyanide tanks, 44 feet in diameter, 9 feet deep, and holding 610 tons of sand each. Each requires from 7.75 to 8.25 hours to fill. They are fitted with a double filter bottom, the top one being 8 ounce duck, underlaid by a second filter of cocoa matting. There are four side gates and one center gate. After filling the tank the water is drained off and the top of the sands are leveled. Strong cyanide solution (0.14% KCN) is run on and left in contact with the sands continuously for three days. The effluent solution is run to (12). Weak solution (0.07% KCN) is then run onto the sand and the contact is maintained for two days. Effluent solution is run to (14). The sands are washed until the effluent solution is down to 0.02% KCN (5 to 7 cents per ton). The sands are then sluiced out, with a 3-inch hose, through the gates. This requires two men about 4 hours. The tanks and filters are thoroughly cleaned and are then ready for another charge. From (10), (15), (16), and (17); deliver sands to waste and solutions to (12) and (14).

12. Two weak-precipitation tanks, 26 feet in diameter, 19 feet deep, and holding 300 tons of solution. The solution is run into these tanks until the full capacity is reached. Its value is about $3 per ton. Solution is then pumped, an emulsion of zinc dust being added to the suction pipe of the pump (patent applied for). This emulsion contains about 60 pounds of zinc, or 1 pound of zinc dust per 5 tons of solution. The mixture is elevated to (13) by a compound, duplex, outside-packed, plunger-type pump. From (11); deliver to (13).

13. Filter press, 36 inches square, of the flush-plate and distance-frame pattern, containing 24 frames, each 4 inches in depth. The solution is reduced in value from $2 to 2 cents per ton and contains 0.1% of KCN. The press is run one month before cleaning up. From (12); delivers precipitate to refiner and solution to (16).

14. Two collecting tanks. These are identical in size to (12). The solution is strengthened with KCN up to 0.14% and run directly, without precipitation, to (15). From (11); deliver to (15).

15. Stock-solution tank for strong solution. From (14); delivers to (11).

16. Weak-solution tank. From (13); delivers to (11).

17. Wash-water tank. Delivers to (11).

The percentage of values in the sands recovered is 74.7 (average of 6 months). The cost of cyaniding is about $0.18 per ton.

Slimes Treatment.

The overflow from the settling cones and classifiers contains the slimes in a very dilute condition, about 30 parts water to 1 part of solids, the solids easily passing a 200-mesh screen. Economy both in subsequent treatment and water necessitates the dewatering of this material, which is accomplished by clarifying tanks.

18. Eighteen clarifying tanks. Nine of these tanks are 26 feet in diameter and the others are 18 feet in diameter. All are 20 feet deep. They are built of redwood, have vertical sides, and contain a false conical bottom which serves to prevent any sudden slide of thick slimes into the spigot opening. From (5) and (6); deliver spigots to (21) and overflows of clear water to sluicing reservoir.

19. Six clarifying tanks, 26 feet in diameter and 24 feet deep. The spigot product from these tanks has a consistency of about three parts of water to one part of solids. This material is conveyed three miles in a 12-inch cast-iron pipe line on a minimum grade of 1.5%. From (8) and (9); deliver spigots to (20) and overflows to waste or to Sands Plant No. 1.

20. South Division Sludge Storage-tank, 26 feet in diameter and 20 feet deep. From (19); delivers to (21).

The treatment of the Terraville pulp is very similar to that of the South Division already described, with the one point of difference that one intermediate set of settling cones is omitted.

The mill at Central sends its pulp directly to settling cones at Cyanide Sands Plant No. 2, where both the Terraville and Central sands receive the cyanide treatment, similar to that of Cyanide Sands Plant No. 1. The overflow from the settling tanks and classifiers corresponds closely to that already described and is conducted in like manner to the North Division Sludge Storage-tank, identical with (20).

Cyanide Slimes Plant.

21. Twenty-four filter presses. The slimes are brought to the filter house in a 12-inch pipe, thence along the entire length of the filter buildings in two 10-inch pipes and to the filter presses in 6-inch pipes, being connected to the presses by flexible hose. From (18), (20), and North Division Sludge Storage-tank, (24), (25), (26), and (27); deliver slimes to waste and solutions to (22) and (25).

A filter press consists of an outer supporting frame, 91 flush plates, 92 distance frames, a follower head with thrust screws, together with the necessary connections for entrance and exit of solutions, pulp, etc. The supporting frame consists of massive front and rear standards, spaced 46 feet apart and joining by side rails made from 15-inch channel iron. The plates and frames are rectangular in form, 4×6 feet outside, and the plates have both faces corrugated. The unique feature of this press is the automatic sluicing device. The sluicing is effected by means of a small nozzle which may be directed toward any portion of the compartment by turning the pipe about its axis. (Patented.)

The press is filled by opening 6 feed pipes by one movement of a lever, the pulp enters the press under a gravity head of 35 pounds. The cakes are subjected to 6 hours' treatment consisting of lixiviation, oxidation, and washing. The slimes cake is then sluiced out, about 4 tons of water per ton of slimes being used.

Each press has a capacity of about 25 tons of dry slimes and the time necessary for a complete cycle is about 8 hours, or each press has a capacity of 75 tons of slimes per day.

22. Weak-precipitation tanks. The solution from the first lixiviation is drawn from these tanks and is pumped to the press after receiving a carefully gauged amount of zinc dust in the form of an emulsion. From (21); deliver to (23).

23. Filter press. From (22); delivers precipitate to refiner and weak solution to (24).

24. Weak-solution storage-tanks. From (23); deliver to (21).

25. Strong-solution tanks. The weak solution from (24) is used for the second lixiviation and is strengthened by adding KCN and returned to the strong-solution storage tanks. From (21); deliver to (21).

26. Wash-water tank. Delivers to (21).

27. Sluicing water storage-tank. Capacity 100,000 gallons. From sluicing reservoir; delivers to (21).

The capacity of this plant is about 1,800 tons per day and the cost for January, 1908, was 27 cents per ton.

Refining Plant.

The precipitates from the cyanide plants are refined with a loss of less than 0.1%. The precipitate is put into a lead-lined tank equipped with an agitator, and treated with dilute HCL. They are then allowed to settle and the supernatant liquid is drawn off and passed through a filter press. Sulphuric acid is then put into the tank and the mixture again agitated and this time heated. The precipitates are again allowed to settle and the supernatant liquid is passed through a filter press as before. Wash water is now pumped into the tank and the whole mixture is passed through the filter and the precipitate washed thoroughly. The precipitate is then dried on a steam bath and mixed with litharge, borax, silica, and powdered coke. This mixture is sprinkled with lead acetate and briquetted under a pressure of 4,000 to 6,000 pounds per square inch. After drying, the briquettes are melted down and the borax slag drawn off and sent to a blast furnace. The button remaining is cupeled and the metal thus obtained is run into bars ready to ship to the mint. This metal is 975 to 985 fine gold. The total cost of refining is about $0.15 per ounce.

Costs.

At this mine a vast body of silicified slate has been followed from the surface to a depth of nearly 1,600 feet. The thickness is several hundred feet. The metallurgical problem is simple; 4.7 tons are crushed per stamp day. Amalgamation is followed by cyaniding the tailings at a cost of 18 cents per ton stamped. Water alone costs about 10 cents per ton. In eight recent years the output has averaged as shown in Table 121.

TABLE 121. — RESULTS AT THE HOMESTAKE MINE FOR EIGHT YEARS

		Per Ton.
Tons milled	9,383,114	
Gold recovered	$34,638,518.00	$3 69
Cost	28,587,300.00	3.04
Profit	6,051,218.00	0.65

The recent cost for mining and development has been $2 a ton. For mining at the rate of 4,000 tons a day from a single ore body this seems high. Possibly the methods are not good; a more wasteful one might be more profitable. Table 122 gives the costs per ton of the whole process in 1907.

TABLE 122. — COSTS PER TON AT THE HOMESTAKE IN 1907.

	Per Ton.
Milling and amalgamating	$0.44
Cyaniding	0.18
Slime treatment and construction	0.24
Total	$0.86

§ 654. BUNKER HILL AND SULLIVAN MILL, KELLOGG, IDAHO. — The capacity of this mill, which is given to illustrate the Cœur d'Alene practice, is 3,000 tons per 24 hours. The economic mineral is argentiferous galena disseminated in a gangue of siderite and quartzite. Pyrite, chalcopyrite, and sphalerite also occur, but not in sufficient quantities to be of importance. The mill is operating three 8-hour shifts per day and handles 1,000 tons of ore per shift. In the following flow-sheets, see Figs. 279 and 280, tonnages refer to the amount handled in 8 hours. The problem is to save the silver-bearing galena. Ore from the mine goes to (1).

Rock House (*Fig.* 279).

1. Ore bin of 500 tons' capacity. From the mine; delivers 1,000 tons per 8 hours, via 4 feed gates, to (2).

2. Four grizzlies with 1.25-inch spaces between the bars. From (1); deliver oversize to (3) and undersize to (6).

3. Two comet "D" style breakers. From (2); deliver crushed ore to (4).

4. One 30-inch picking belt. From (3); delivers hand-picked ore, running 40% lead or better, to smelter and residual ore to (5).

5. Crushing rolls, 14 × 36 inches. From (4); deliver crushed ore to (7).

6. Fourteen-inch belt conveyor. From (2); delivers to (7).

7. Belt conveyor, 24 inches wide, 8-ply rubber, 315 feet from center to center, 19.75° slope, handling 1,000 tons in 8 hours. From (5) and (6); delivers to (8) in the sampling tower.

Sampling Tower (*Fig.* 279).

8. Vezin sampler. From (7); delivers 6.66% of the ore, as sample, to (9) and residual ore to (12).

9. Crushing rolls, 14 × 24 inches. From (8); deliver crushed ore to (10).

10. Vezin sampler. From (9); delivers 6.66% of the ore, as sample, to (11) and residual ore to (12).

11. Sample bin. From (10). The ore is quartered down to 100 pounds, then crushed to 0.25 inch and further reduced by split shoveling until the quantity desired for assay purposes is obtained. The residue from sampling goes to (12).

12. Mill bins of 500 tons' capacity. From (8), (10), and (11); deliver to (13) via 2 plunger feeders.

South or Coarse-Concentration Mill (*Fig.* 279).

13. Two cylindrical trommels, each with two screening sections, slope 1.125 inches to the foot, speed 20 revolutions per minute. The first section has 18 and the second 36-millimeter holes. The feed to these trommels from (12) is 980 tons of ore running 12% lead, and from (15) 600 tons running 8% lead. Seven hundred and fifty tons of undersize through 18 millimeters go to (18), 650 tons of undersize through 36 millimeters go to (16), and 180 tons of oversize to (14).

14. Two sets of crushing rolls, 14 × 36 inches. From (13); deliver crushed ore to (15).

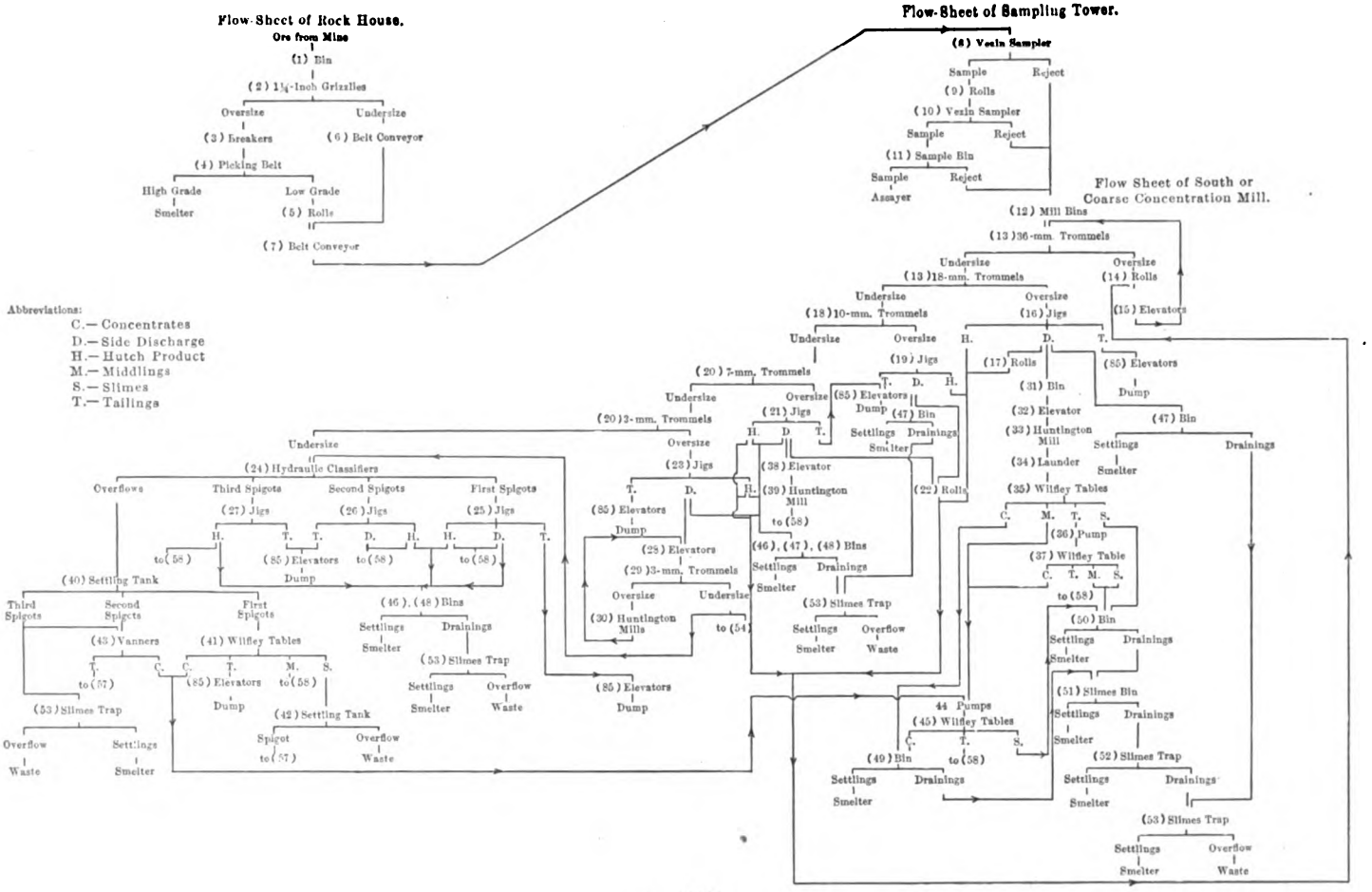
Flow-Sheet of Rock House.
Ore from Mine
(1) Bin
(2) 1¼-Inch Grizzlies
Oversize
Undersize
(3) Breakers
(6) Belt Conveyor
(4) Picking Belt
High Grade
Low Grade
Smelter
(5) Rolls
(7) Belt Conveyor
Flow-Sheet of Sampling Tower.
(8) Vezin Sampler
Sample
Reject
(9) Rolls
(10) Vezin Sampler
Sample
Reject
(11) Sample Bin
Sample
Reject
Assayer
Flow Sheet of South or Coarse Concentration Mill.
(12) Mill Bins
(13) 36-mm. Trommels
Undersize
Oversize
(13) 18-mm. Trommels
(14) Rolls
(15) Elevators
Undersize
Oversize
(18) 10-mm. Trommels
(16) Jigs
H.
D.
T.
Undersize
Oversize
(19) Jigs
(20) 7-mm. Trommels
(17) Rolls
(85) Elevators
Dump
Undersize
Oversize
(85) Elevators
Dump
(31) Bin
(20) 3-mm. Trommels
(21) Jigs
(47) Bin
(32) Elevator
(33) Huntington Mill
Settlings
Drainings
Smelter
Undersize
Oversize
(23) Jigs
(38) Elevator
(39) Huntington Mill
to (58)
(22) Rolls
(34) Launder
(35) Wilfley Tables
(24) Hydraulic Classifiers
Overflows
Third Spigots
Second Spigots
First Spigots
(27) Jigs
(26) Jigs
(25) Jigs
(85) Elevators
Dump
(28) Elevators
(29) 3-mm. Trommels
(30) Huntington Mills
(46), (47), (48) Bins
Settlings
Drainings
Smelter
(53) Slimes Trap
Settlings
Overflow
Smelter
Waste
(36) Pump
(37) Wilfley Table
(40) Settling Tank
Third Spigots
Second Spigots
First Spigots
(43) Vanners
(41) Wilfley Tables
(46), (48) Bins
(53) Slimes Trap
(85) Elevators
Dump
(42) Settling Tank
Spigot
Overflow
Waste
(54)
(50) Bin
(51) Slimes Bin
44 Pumps
(45) Wilfley Tables
(49) Bin
(52) Slimes Trap
(53) Slimes Trap
Abbreviations:
C.—Concentrates
D.—Side Discharge
H.—Hutch Product
M.—Middlings
S.—Slimes
T.—Tailings

FIG. 279.

15. Two elevators, 8-ply belts, 16 inches wide, 7.75 × 15-inch malleable iron buckets, speeds 480 feet per minute, 37-inch pulleys, and 48 feet between centers. From (14), (16), (17), (19), (21), (22), and (23); deliver 600 tons of ore, running 8% lead, to (13).

16. Two-compartment jigs. From (13); deliver hutch products from 1 compartments to (15), side discharges from first compartments to (31) or (47) discharges from second compartments to (17), and tailings, running 0.9% lead, to (85).

Flow-Sheet of Elevator House and North or Middlings Re-treatment Mill.

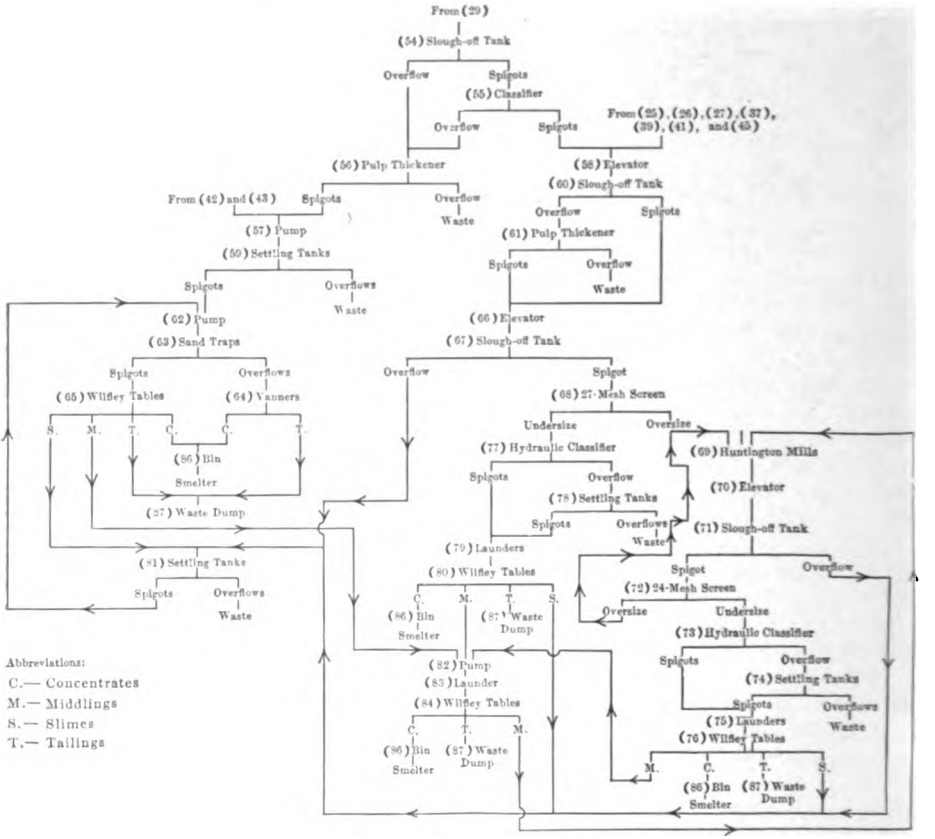

FIG. 280.

17. Two sets of crushing rolls, 16 × 30 inches. From (16); deliver crushed ore to (15).

18. Two cylindrical trommels with 10-millimeter holes, making 20 revolutions per minute, and having a slope of 1.125 inches to the foot. From (13); deliver undersize to (20) and oversize to (19).

19. Six 3-compartment jigs. From (18); deliver hutches to (15), side discharges from the first two compartments to (47), discharges from third compartments to (22), and tailings, running 1.3% lead, to (85).

20. Four cylindrical trommels, each having two screening sections, the first with 3 and the second with 7-millimeter holes. The trommels have a

slope of 1.125 inches to the foot and make 20 revolutions per minute. From (18); deliver 300 tons of undersize from the first sections, assaying 16% lead, to (24), undersize from the second sections to (23), and oversize to (21).

21. Four 3-compartment jigs. From (20); deliver hutches from first two compartments to (47), hutches from third compartments to (15), side discharges from first two compartments to (47), discharges from third compartments to either (22) or (38), and tailings, running 1.9% lead, to (85).

The feed to these jigs, together with the feed to jigs (16) and (19), averages 11% lead.

22. Two sets of crushing rolls, 14 × 30 inches. From (19) and (21); deliver crushed ore to (15).

23. Four 3-compartment jigs. From (20); deliver hutches from first compartments to (46), hutches from second compartments to (48), hutches from third compartments to (15), side discharges from the first two compartments to (48), discharges from third compartments to (28), and tailings, running 2.1% lead, to (85).

24. Six 3-spigot hydraulic classifiers. From (20) and (29); deliver first spigots to (25), second spigots to (26), 24 tons of ore, as third spigots, to (27), and overflows, carrying 100 tons of ore, running 18% lead, to (40).

25. Six 3-compartment jigs. From (24); deliver hutches from first compartments to (46), hutches from second and third compartments to (58), side discharges from first compartments to (48). The second compartments discharge to the third compartments and the latter discharges go to (58), while the tailings, assaying 2.5% lead, go to (85).

26. Six 3-compartment sand jigs. From (24); deliver hutches from first compartments to (46), hutches and discharges from the second and third compartments to (58), and tailings to (85).

27. Eight 4-compartment fine jigs. From (24); deliver hutches from first compartments to (46), hutches from second compartments to (48), hutches from third and fourth compartments to (58), and tailings to (85).

28. Two middlings elevators, 14 inches wide, 7-ply belts, 7 × 12-inch malleable-iron buckets, 37-inch pulleys, and run at a speed of 417 feet per minute. From (23) and (30); deliver to (29).

29. Two trommels with screens having 3-millimeter holes. From (28); deliver undersize to (24) or (54), and oversize to (30).

30. Four 5-foot Huntington mills, two of which are held in reserve and two used. Crush through 12 mesh. From (29); deliver pulp to (28).

31. Two sets of bins. From (16); deliver, via plunger feeders, to (32).

32. Elevator. From (31); delivers 40 tons of ore, assaying 45% lead, to (33).

33. Six-foot Huntington mill crushing through 20 mesh. From (32); delivers pulp to (34).

34. Pocket launder. From (33); delivers, via 4 pockets, to (35).

35. Four Wilfley tables. Used to grade the 45% lead product fed from (34). Deliver concentrates, assaying 77% lead, to (49); middlings, to (44); 15 tons of ore, as tailings, assaying 30% lead, to (36); and slimes to (50).

36. Centrifugal pump. From (35); delivers to (37).

37. Wilfley table. From (36); delivers concentrates, assaying 70% lead, to (44); middlings, assaying 40% lead, to (50); tailings, assaying 10% lead, to (58); and slimes, assaying 45% lead, to (50).

38. Elevator. Fed with 45 tons of ore, assaying 7% lead. From (21); delivers to (39).

39. Six-foot Huntington mill crushing through 12 mesh. From (38); delivers pulp to (58).

40. V-shaped settling tank, 180 feet long by 6 feet deep, having 85 spigots

and an overflow. From (24); delivers first set of spigots or fine sand to (4), second set of spigots to (43), and the last set of 4 spigots, discharging 2 t[o] of ore assaying 17% lead, to (43) or (53).

41. Wilfley table. From (40); delivers concentrates to (44); middlings to (58); 40 tons of tailings, assaying 2.1% lead, to (85); and slimes, assaying 13% lead, to (42).

42. V-shaped settling tank. From (41); delivers spigot to (57) and overflow to waste.

43. Twenty-four vanners. From (40); deliver concentrates to (44) and 40 tons of tailings, assaying 9% lead, to (57).

44. Two 2-inch centrifugal pumps. From (35), (37), (41), and (43) deliver to (45).

45. Two Wilfley tables. Used for grading. From (44); deliver concentrates to (49), tailings to (58), and slimes to (50).

46. Ore bin for first-class concentrates. Receives ore, running 77% lead, from (23), (25), (26), and (27); delivers to smelter and drainings to (53).

47. Ore bin for second-class concentrates. Receives ore, averaging 44% lead, from (16), (19), and (21); delivers to smelter and drainings to (53).

48. Ore bin for third-class concentrates. Receives ore, averaging 55% lead, from (23), (25), and (27); delivers to smelter and drainings to (53).

49. Ore bin for first-class concentrates. Receives ore, assaying 77% lead, from (35) and (45); delivers to smelter and drainings to (51).

50. Ore bin for second-class concentrates. From (35), (37), and (45) delivers to smelter and drainings to (51).

51. Slimes bin. From (49) and (50); delivers to smelter and drainings to (52).

52. No. 1 slimes trap. From (51); delivers settlings to smelter and overflow to (53).

53. No. 2 slimes trap. From (40), (46), (47), (48), and (52); delivers settlings to smelter and overflow to waste.

Elevator House (*Fig.* 280).

54. Slough-off tank. From (29); delivers spigots to (55) and overflow to (56).

55. Classifier with 2 spigots. From (54); delivers spigots to (58) and overflow to (56).

56. Pulp thickener, a square tank with a gooseneck discharge. From (54) and (55); delivers spigots to (57) and overflow to waste.

57. Traylor 3-inch centrifugal pump having a 36-foot lift. From (42), (43), and (56); delivers 45 tons of ore, assaying 9% lead, to (59).

58. Elevator with 7 × 15-inch pressed-steel buckets and 36-inch pulleys. From (25), (26), (27), (37), (39), (41), (45), and (55); delivers 140 tons of ore, assaying 7.5% lead, to (60).

North or Middlings Re-treatment Mill (*Fig.* 280).

59. Eight Callow settling tanks. From (57); deliver overflows to waste and spigots to (62).

60. Slough-off tank. From (58); delivers spigots to (66) and overflow to (61).

61. Pulp thickener, a square tank having a gooseneck discharge. From (60); delivers overflow to waste and spigots to (66).

62. Traylor 3-inch centrifugal pump. From (59) and (81); delivers to (63).

63. Two sand traps. From (62); deliver overflows to (64) and spigots to (65).

64. Sixteen 6-foot vanners. From (63); deliver concentrates to (86) and tailings, assaying 7% lead, to (87).

65. Two Wilfley tables for treating fine sand. From (63); deliver concentrates to (86), middlings to (82), tailings to (87), and slimes to (81).

66. Elevator, 16 inches wide, 8-ply belt, 7 × 15-inch pressed-steel buckets, 37-inch pulleys, 45 feet between centers, and having a belt speed of 387 feet per minute. From (60) and (61); delivers to (67).

67. Slough-off tank. From (66); delivers overflow to (81) and spigots to (68).

68. Twenty-four inch duplex Callow screen, 27 mesh, 28 wire. From (67); delivers undersize to (77) and oversize to (69).

69. Four 6-foot Huntington mills. Two mills are used and two held in reserve. They make 65 revolutions per minute and crush through 20 mesh. From (68), (72), and (84); deliver pulp to (70).

70. Elevator. From (69); delivers to (71).

71. Slough-off tank. From (70); delivers overflow to (81) and spigot to (72).

72. Twenty-four inch duplex Callow screen, 24 mesh, 26 wire. From (71); delivers oversize to (69) and undersize to (73).

73. Hydraulic classifier with 3 spigots. From (72); delivers spigots to (75) and overflow to (74).

74. Two Callow settling tanks. From (73); deliver overflows to waste and spigots to (75).

75. Four pocket launders. From (73) and (74); deliver to (76).

76. Eleven Wilfley tables. From (75); deliver concentrates to (86), middlings to (82), tailings, assaying 3% lead, to (87), and slimes to (81).

77. Hydraulic classifier with 3 spigots. From (68); delivers spigots to (79) and overflow to (78).

78. Two Callow settling tanks. From (77); delivers overflow to waste and spigots to (79).

79. Four pocket launders. From (77) and (78); deliver to (80).

80. Eight Wilfley tables. From (79); deliver concentrates to (86), middlings to (82), tailings, assaying 3% lead, to (87), and slimes to (81).

81. Eight Callow settling tanks. From (65), (67), (71), (76), and (80); deliver overflows to waste and spigots to (62).

82. One 2-inch centrifugal pump. From (65), (76), and (80); delivers to (83).

83. Pocket launder. From (82); deliver to (84).

84. Three Wilfley tables for re-treating middlings. From (83); deliver concentrates to (86), middlings to (69), and tailings, assaying 3% lead, to (87).

85. Elevators for tailings from the South mill. From (16), (19), (21), (23), (25), (26), (27), and (41); deliver 600 tons of tailings, assaying 2.1% lead, to coarse tailings dump.

86. Bins for concentrates of North mill. From (64), (65), (76), (80), and (84). Receive 17 tons of concentrates assaying 43% lead. Deliver to smelter.

87. Waste dump for tailings from North mill. From (64), (65), (76), (80), and (84). Receives 168 tons of tailings assaying 4.5% lead.

The coarse tailings from the South mill will be worked over some time in the future by the North mill which was built for this special purpose, although it is at present used to help out the South mill. The fine tailings from both mills go to waste.

The mills, supposed to run continuously, have been shutting down lately about twice a month for general repairs and holidays. They average 27 days a month of continuous running.

Labor and Wages.

There are on each shift; 1 shift-boss, 4 jig men, 2 vanner men, 3 Huntington mill men, 3 oilers, and, on the day shift, 2 foremen, 3 rock-house men, 1 ore picker, 2 roustabouts, 1 blacksmith, 1 helper, and 1 sampler, besides the superintendent.

The wages are $3.50 for machine men and $3 per shift for oilers and helpers.

Power.

The mill uses about 550 horse-power, of which about 400 is electrical.

Costs.

The Bunker Hill mine in 20 years up to June 1, 1907, had produced as shown in Table 123.

TABLE 123. — PRODUCTION AND COSTS AT BUNKER HILL FOR LAST 20 YEARS.

		Per Ton.
Tons mined	3,388,106	
Gross value	$34,375,266.00	$10.15
Smelting, refining, and deductions	14,249,036.00	4.21
Net value to mine	20,126,330.00	5.94
Operating costs	8,832,244.00	2.60
Other costs, construction, litigation, exploration, etc.	3,400,000.00	1.00
Total cost approximately	$12,232,244.00	$3.60

The ore shipped in 1906–07 was somewhat above the average in grade, but it will serve as an illustration of the general problem of mining on the Wardner vein. Out of 336,630 tons mined, 87,640 tons were shipped to the smelters or 1 ton in 3.84. The shipping product averaged 45.83% lead and 18.7 ounces silver per ton. The ore as mined assayed 13.32% lead and 5.89 ounces silver, the milling loss being estimated at 10.43% lead and 17.06% silver, or 11.96% of the combined product. Without considering the high prices for the year in question, but taking average prices of $92 a ton for lead and 60 cents an ounce for silver, we find that this ore is giving the results shown in detail in Table 124, while the costs per ton mined for the same period of time are given in detail in Table 125, for the year ending May 31, 1907, and the maximum and minimum costs for the last 7 years.

TABLE 124. — PROFITS PER TON ON BUNKER HILL OPERATIONS FOR 1906–07 AT AVERAGE PRICES.

	Lead per Ton.	Silver per Ton.	Total per Ton.
Full assay value	$12.25	$5.53	$15.78
Mill losses, say 12 percent.			1.89
Value leaving mine			13.88
Mining, milling, and construction			2.43
Freight and treatment			3.71
Smelter deductions (losses to mine)			3.08
Total costs			6.14
Losses and deductions			4.97
Total costs and deductions			11.11
Average profit			4.67

TABLE 125. — COSTS PER TON INCLUDING CONSTRUCTION WORK AT THE BUNKER HILL AND SULLIVAN MINE.

	For Year Ending May 31, 1907.			During Last Seven Years	
	Labor per Ton.	Supplies per Ton.	Total per Ton.	Maximum Total per Ton.	Minimum Total per Ton.
Stoping	$1.105	$0.365	$1.470	$2.33	$1.26
Tramming	0.053	0.017	0.070	0.10	0.05
Concentrating	0.149	0.106	0.255	0.26	0.19
Exploration	0.049	0.036	0.085		
Shipping	0.046	0.005	0.051		
General expenses			0.143		
Construction			0.044	0.60	0.19
Mill construction			0.056		
Taxes, litigation, etc.			0.253		
Total costs per ton			$2.427	$3.29	$1.69

§ 655. MILL NO. 3 OF THE FEDERAL LEAD COMPANY, FLAT RIVER, MISSOURI. — The breaking and sampling departments of this mill, shown in Fig. 281, have capacities of 2,600 tons each per 24 hours. The concentrating department (Fig. 282) handles 2,400 tons in the same time. The economic mineral is an argentiferous galena. An average analysis of the crude ore milled for the year ending November 30, 1907, follows:

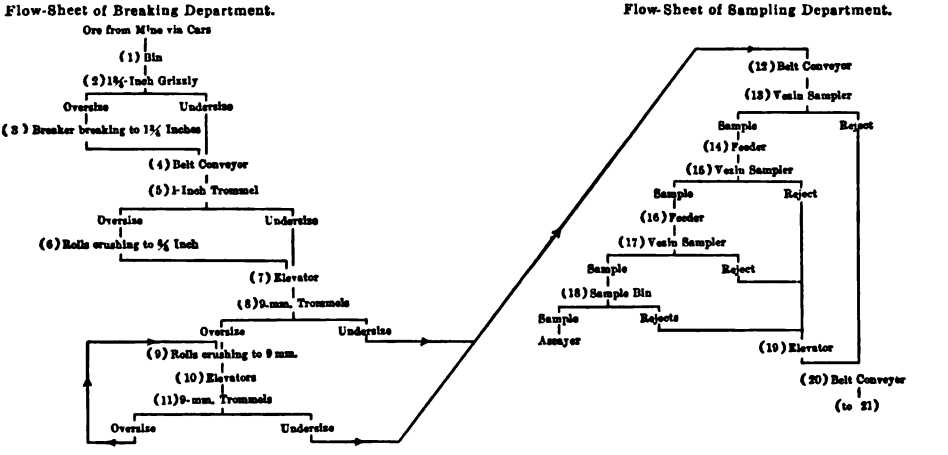

FIG. 281.

Pb	5.90 percent.	Mn	0.465 percent.
Cu	0.065 "	CaO	25.30 "
Zn	0.82 "	MgO	14.50 "
S	2.18 "	Al_2O_3	5.755 "
SiO_2	4.565 "	*CO_2	36.025 "
Fe	3.925 "	Ag	0.13 ounce per ton.

*CO_2 is calculated considering CaO and MgO as carbonates.

During the 12 months above mentioned 369,901 tons of dry ore were milled. The problem is to save the silver-bearing galena. This flow-sheet is given to show the southeastern Missouri lead practice.

Breaking Department (*Fig.* 281).

There are two similar sections in the breaking department, only one of which is described.

The ore comes from the mine in side-discharging cars and is dumped directly to (1).

1. Ore bin with a capacity of 150 tons. Receives run of mine ore via cars, and delivers to (2).

2. Shaking grizzly with 1.75-inch spaces between the bars. Makes 135 2-inch thrusts per minute, has a capacity of 1,300 tons per 24 hours, and requires 2 horse-power. From (1); delivers oversize to (3) and undersize to (4).

3. Farrel-Blake breaker with a jaw opening 24 × 42 inches, set to break to 1.75 inches, making 225 thrusts per minute, and requiring 40 horse-power. From (2); delivers crushed ore to (4).

4. Twenty-two inch belt conveyor having a conveying length of 92 feet, a speed of 288 feet per minute, a capacity of 1,300 tons per 24 hours, elevating the ore 28 feet, and requiring 8 horse-power. From (2) and (3); delivers to (5).

5. Trommel, 3.5 × 12 feet, with steel segments 0.1875 inch thick, having 1-inch round holes, a slope of 2 inches to the foot, making 15 revolutions per

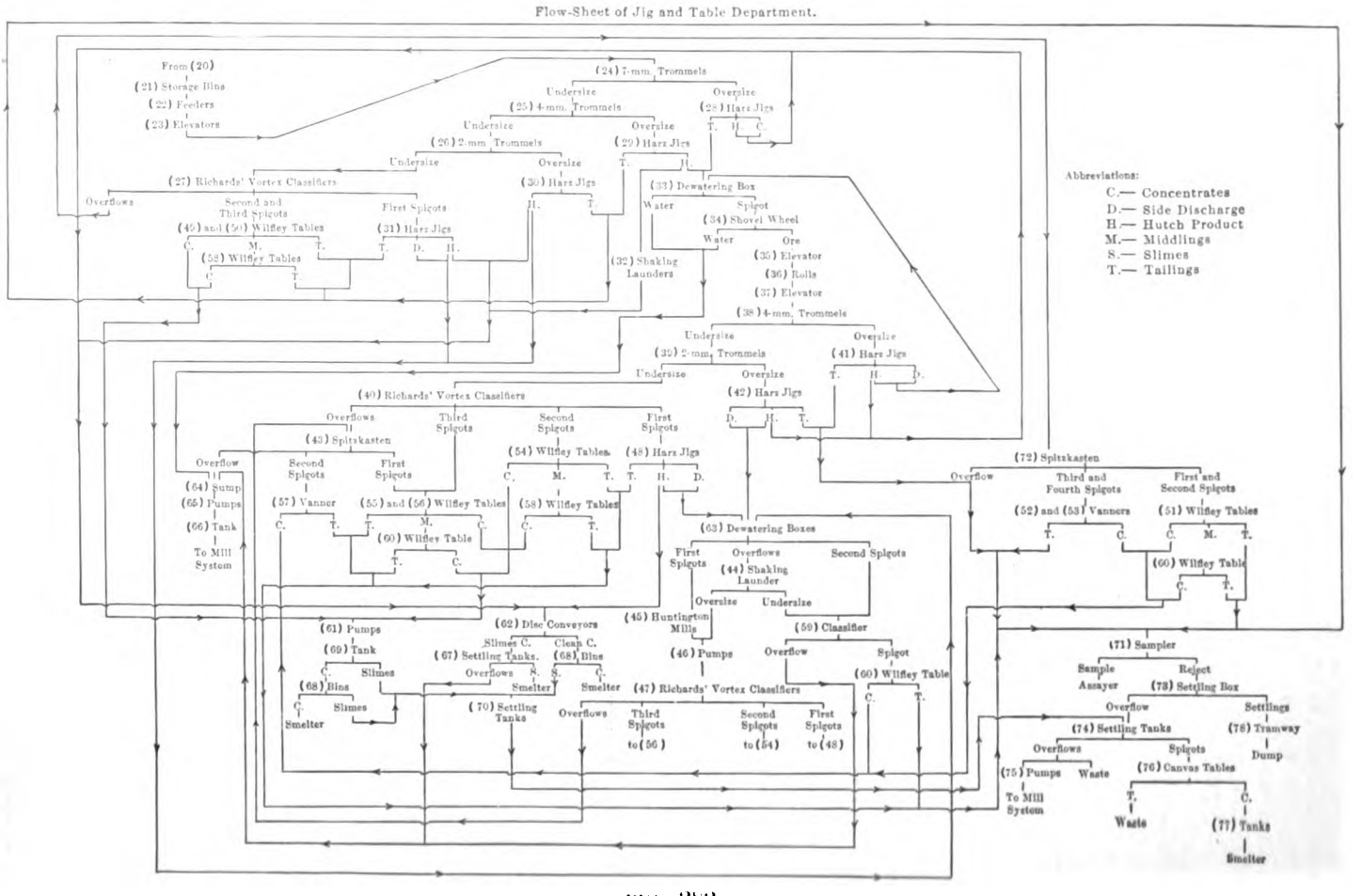
Flow-Sheet of Jig and Table Department.
From (20)
(21) Storage Bins
(22) Feeders
(23) Elevators
(24) 7-mm. Trommels
Undersize
Oversize
(25) 4-mm. Trommels
(28) Harz Jigs
(26) 2-mm. Trommels
(29) Harz Jigs
(27) Richards' Vortex Classifiers
(30) Harz Jigs
(33) Dewatering Box
Overflows
Second and Third Spigots
First Spigots
Water
Spigot
(45) and (50) Wilfley Tables
(31) Harz Jigs
(34) Shovel Wheel
Ore
(58) Wilfley Tables
(32) Shaking Launders
(35) Elevator
(36) Rolls
(37) Elevator
(38) 4-mm. Trommels
(39) 2-mm. Trommels
(41) Harz Jigs
(40) Richards' Vortex Classifiers
(42) Harz Jigs
Third Spigots
Second Spigots
First Spigots
(43) Spitzkasten
Overflow
(64) Sump
(65) Pumps
(66) Tank
To Mill System
(57) Vanner
(55) and (56) Wilfley Tables
(54) Wilfley Tables
(48) Harz Jigs
(60) Wilfley Table
(63) Dewatering Boxes
(44) Shaking Launder
Oversize
Undersize
(62) Disc Conveyors
(45) Huntington Mills
(59) Classifier
(61) Pumps
(69) Tank
Slimes C.
Clean C.
(67) Settling Tanks.
(68) Bins
Slimes
Smelter
(46) Pumps
(47) Richards' Vortex Classifiers
(70) Settling Tanks
Third Spigots to (56)
Second Spigots to (54)
First Spigots to (48)
(72) Spitzkasten
Third and Fourth Spigots
First and Second Spigots
(52) and (53) Vanners
(51) Wilfley Tables
(71) Sampler
Sample
Reject
Assayer
(73) Settling Box
Settlings
(74) Settling Tanks
(78) Tramway
Dump
Spigots
(75) Pumps
Waste
(76) Canvas Tables
To Mill System
(77) Tanks
Abbreviations:
C.— Concentrates
D.— Side Discharge
H.— Hutch Product
M.— Middlings
S.— Slimes
T.— Tailings

FIG. 282.

minute, and requiring 2 horse-power. From (4); delivers oversize to (6) and undersize to (7).

6. Colorado Iron Works geared rolls, 24 × 48 inches, crushing to 0.75 inch, making 35 revolutions per minute, and requiring 26 horse-power. From (5); deliver crushed ore to (7).

7. Twenty-eight inch elevator having a speed of 400 feet per minute, staggered buckets, 7 × 14 inches, set 18 inches apart, elevating the ore 51 feet, handling 1,300 tons per 24 hours, and requiring 9 horse-power. From (5) and (6); delivers to (8).

8. Two trommels, 4 × 12 feet, with 9-millimeter round holes, slopes of 2 inches to the foot, and making 15 revolutions per minute. Each has a working capacity of 650 tons per 24 hours and requires 2 horse-power. From (7); deliver oversize to (9) and undersize to (12).

9. Two sets of Colorado Iron Works geared rolls, 24 × 48 inches, crushing to 9 millimeters and making 61 revolutions per minute. Each set requires 60 horse-power. From (8) and (11); deliver crushed ore to (10).

10. Two 26-inch elevators having speeds of 400 feet per minute, staggered buckets, 7 × 14 inches, set 18 inches apart, and elevating the ore 64 feet. Each requires 4 horse-power. From (9); deliver to (11).

11. Four trommels, 4 × 12 feet, with 9-millimeter round holes, slopes of 2 inches to the foot, and making 15 revolutions per minute. Each requires 1 horse-power. From (10); deliver oversize to (9) and undersize to (12).

Sampling Department (*Fig.* 281).

There is only one section in this department.

12. Twenty-four inch belt conveyor having a conveying length of 321 feet, a speed of 290 per minute, a maximum capacity of 3,600 tons per 24 hours, elevating the ore 63.5 feet, and requiring 9 horse-power. From (8) and (11); delivers to (13).

13. One 9-foot Vezin sampler cutting out 10% of the ore and making 15 revolutions per minute. From (12); delivers sample to (14) and reject to (20).

14. Shaking feeder making 140 1.75-inch strokes per minute and having a maximum capacity of 240 tons per 24 hours. From (13); delivers to (15).

15. One 6.67-foot Vezin sampler with details as in (13). From (14); delivers sample to (16) and reject to (19).

16. Shaking feeder with details as in (14), but handling only 24 tons per 24 hours. From (15); delivers to (17).

17. One 3.34-foot Vezin sampler cutting out 20% of the ore and making 15 revolutions per minute. (13), (14), (15), (16), and (17) require 2 horse-power. From (16); delivers sample to (18) and reject to (19).

18. One 8-compartment sample bin with a total capacity of 32 tons. From (17); delivers samples to assayer and rejects to (19).

19. Fourteen-inch elevator having a speed of 300 feet per minute, buckets 14 inches wide, set 18 inches apart, elevating the ore 54 feet, and requiring 2 horse-power. From (15), (17), and (18); delivers to (20).

20. Twenty-four inch belt conveyor and tripper. The belt has a conveying length of 250 feet, a speed of 300 feet per minute, a maximum capacity of 3,600 tons per 24 hours, elevates the ore 7 feet, and requires 6 horse-power. From (13) and (19); delivers to (21).

Jig and Table Departments (*Fig.* 282).

These departments are divided into 3 sections, one of which is described below. The capacity of the mill from this point is 2,400 tons per 24 hours.

21. Two storage bins, 23 × 28 × 39 feet, each having a capacity of 1.4 tons. From (20); deliver to (22).

22. Two shaking feeders making 60 1.5-inch strokes per minute. Each has a capacity of 400 tons per 24 hours or 4.3 cubic feet per minute, and requires 0.5 horse-power. From (21); deliver to (23).

23. Two 14-inch elevators having speeds of 360 feet per minute and elevating the ore 60 feet. Each handles 400 tons per 24 hours and requires 2.1 horse-power. From (22); deliver to (24).

24. Four trommels, 4 × 9 feet, with 7-millimeter round holes, slope of 1 inch to the foot, and making 20 revolutions per minute. Each handles 200 tons per 24 hours and requires 0.75 horse-power. One hundred and sixty-eight gallons of water per minute are added, 64 gallons to remove the oversize and 104 gallons as spray water. From (23); deliver oversize to (28) and undersize to (25).

25. Four trommels, 3 × 9 feet, with 4-millimeter round holes, slopes of 1 inch to the foot, and making 22 revolutions per minute. Each handles 146.3 tons per 24 hours and requires 0.55 horse-power. One hundred and twenty-eight gallons of water per minute are added, 64 gallons to remove the oversize and 64 gallons as spray water. From (24); deliver oversize to (29) and undersize to (26).

26. Four trommels with 2-millimeter round holes. Each handles 84 tons per 24 hours and requires 0.45 horse-power. One hundred and twenty-four gallons of water per minute are added, 64 gallons to remove the oversize and 60 gallons as spray water. Other details as in (25). From (25); deliver oversize to (30) and undersize to (27).

27. Four Richards' vortex classifiers each with 3 spigots and 3-inch sorting columns. Each handles 48.5 tons per 24 hours. Two hundred and sixty-four gallons of water per minute are added, 136 gallons as hydraulic water for the first, 80 gallons for the second, and 48 gallons for the third sorting columns. The first spigots deliver 96 gallons, the second spigots 56 gallons, and the third spigots 56 gallons of water per minute. The overflows carry 284 gallons of water per minute. From (26); deliver first spigots to (31), second spigots to (49), third spigots to (50), and overflows to (72).

28. Eight 1-compartment Harz jigs with sieves, 17.5 × 32.5 inches, of No. 13 steel plate with 7-millimeter round holes. The plungers, 18 × 34 inches, make 155 1.25-inch throws per minute. Each handles 26 tons per 24 hours and requires 0.57 horse-power. Two hundred and forty-eight gallons of water per minute are added. The hutches discharge 120 gallons and the tailings carry 192 gallons of water per minute. From (24); deliver concentrates and hutch products to (62) and tailings to (33).

29. Eight 3-compartment Harz jigs with sieves 17.5 × 32.5 inches. The first and second sieves are of 4-mesh, 16-wire cloth and the third sieves are of steel plate with 5-millimeter round holes. The plungers, 18 × 34 inches, make 168 strokes per minute. The strokes of the first and second plungers are 0.875 inch and of the third 0.75 inch in length. Each handles 30.2 tons per 24 hours and requires 1.2 horse-power. Three hundred and eighty-four gallons of water are added. The first hutches discharge 72 gallons, the second 96 gallons, and the third 104 gallons of water per minute. The tailings carry 176 gallons of water per minute. From (25); deliver first hutches to (32), second and third hutches to (33), and tailings to (71).

30. Eight 3-compartment Harz jigs with sieves 17.5 × 32.5 inches. The first sieves are of steel plate with 4-millimeter round holes, the second sieves are of 5-mesh, 16-wire cloth, and the third sieves are of 7-mesh, 17-wire cloth. The plungers, 18 × 34 inches, make 220 strokes per minute. The strokes

of the first plungers are 0.75 inch, and of the second and third 0.625 inch in length. Each handles 16.7 tons per 24 hours and requires 1.6 horse-power. Two hundred and ninety-six gallons of water per minute are added. The first hutches discharge 64 gallons, the second 64 gallons, and the third 72 gallons of water per minute. The tailings carry 160 gallons of water per minute. From (26); deliver first hutches to (62), second and third hutches to (63), and tailings to (71).

31. Eight 2-compartment Harz jigs with sieves, 17.5 × 32.5 inches, of steel plate. The first sieves have 3-millimeter and the second have 2-millimeter round holes. The plungers, 18 × 34 inches, make 240 strokes per minute. The strokes of the first plungers are 0.5 inch and of the second 0.375 inch in length. Each handles 9.6 tons per 24 hours and requires 1.4 horse-power. One hundred and twenty-eight gallons of water per minute are added. The first hutches discharge 48 gallons and the second 56 gallons of water per minute. The tailings carry 120 gallons of water per minute. From (27); deliver first hutches to (62), second side discharges and hutch products to (63), and tailings to (71).

32. Two shaking launders, 110 feet long, making 160 1-inch strokes per minute, and requiring 2 horse-power. Common to three sections. From (29); deliver to (62).

33. Dewatering box, 3 × 3.5 × 8 feet. The feed carries 592 gallons of water per minute. From (28), (29), and (41); delivers spigot to (34) and water to (64).

34. Cole shovel wheel making 13 revolutions per minute and requiring 0.5 horse-power. Delivers 30 gallons of water per minute with the ore, and 562 gallons of water per minute — including the spigot water from (33). From (33); delivers ore to (35) and water to (64).

35. Fourteen-inch elevator having a speed of 405 feet per minute; elevating the ore 36 feet, and requiring 1.1 horse-power. From (34); delivers to (36).

36. P. and M. rolls, 16 × 36 inches, making 120 revolutions per minute and requiring 19 horse-power. From (35); deliver crushed ore to (37).

37. Fourteen-inch elevator having a speed of 405 feet per minute, elevating the ore 60 feet, and requiring 1.4 horse-power. From (36); delivers to (38).

38. Two trommels, 4 × 9 feet, with 4-millimeter round holes, slopes of 1 inch to the foot, and making 20 revolutions per minute. Each requires 1.4 horse-power. Sixty-four gallons of water per minute are added, 32 gallons to carry away the oversize and 32 gallons as spray water. From (37); deliver oversize to (41) and undersize to (39).

39. Two trommels, 3 × 9 feet, with 2-millimeter round holes, slopes of 1 inch to the foot, and making 22 revolutions per minute. Each requires 1.1 horse-power. Sixty-two gallons of water per minute are added, 32 gallons to carry away the oversize and 30 gallons as spray water. From (38); deliver oversize to (42) and undersize to (40).

40. Two Richards' vortex classifiers each with 3 spigots and 3-inch sorting columns. One hundred gallons of hydraulic water per minute are added, of which 48 gallons go to the first, 34 gallons to the second, and 18 gallons to third sorting columns. The first spigots discharge 24 gallons, the second spigots 36 gallons, and the third spigots 20 gallons of water per minute. The overflows carry 112 gallons of water per minute. From (39); deliver first spigots to (48), second spigots to (54), third spigots to (56), and overflows to (43).

41. Eight 3-compartment Harz jigs with sieves 17.5 × 32.5 inches. The first and second-compartment sieves are of 4 mesh, 16 wire, and the third-compartment sieves are of steel plate with 5-millimeter round holes. The plungers, 18 × 34 inches, make 175 1-inch strokes per minute. Each handles

20.6 tons per 24 hours and requires 1.2 horse-power. Four hundred and sixteen gallons of water per minute are added. The first hutches discharge 72 gallons, the second hutches 96 gallons, and the third hutches 104 gallons of water per minute. The tailings carry 176 gallons of water per minute. From (38) deliver first hutches to (62), second hutches and third side discharges and hutches to (33), and tailings to (71).

42. Four 3-compartment Harz jigs with sieves 17.5 × 32.5 inches. The first-compartment sieves are of steel plate and have 4-millimeter round holes; the second-compartment sieves are of 5-mesh, 16-wire cloth; and the third-compartment sieves are of 7-mesh, 17-wire cloth. The plungers, 18 × 34 inches, make 220 strokes per minute. The strokes of the first plungers are 0.75 inch and of the second and third plungers 0.625 inch in length. Each handles 18.3 tons per 24 hours and requires 1.6 horse-power. One hundred and forty-eight gallons of water per minute are added. The first hutches discharge 32 gallons, the second hutches 32 gallons, and the third hutches 36 gallons of water per minute. The tailings carry 80 gallons of water per minute. From (39); deliver first hutches to (62), second hutches and third side discharges and hutches to (63), and tailings to (71).

43. Spitzkasten with 4 spigots and sides sloping at 65°. The first spigot discharges 14 gallons, the second spigot 14 gallons, the third spigot 11 gallons, and the fourth spigot 11 gallons of water per minute. The overflow carries 198 gallons of water per minute. From (40) and (47); delivers first 2 spigots to (55), last 2 spigots to (57), and overflow to (64).

44. Shaking launder, 30 feet long having a slope of 0.375 inch to the foot and a Federal shaking screen on the end, with 1.5-millimeter round holes. The launder and screen make 240 1-inch throws per minute and require 1 horse-power. The feed carries 80 gallons of water per minute, of which 36 gallons are carried by the oversize and 44 gallons by the undersize. From (63); delivers oversize to (46) and undersize to (59).

45. Two 5-foot Huntington mills crushing through 9-mesh, 17-wire, rolled-slot wire screens, and making 76 revolutions per minute. Each has a capacity of 35 tons per 24 hours and requires 4.5 horse-power. The pulp discharged carries 80 gallons of water per minute. From (63); deliver pulp to (46).

46. Two 5-inch centrifugal sand pumps making 720 revolutions per minute. Only one is run, the other being held in reserve. Each pump requires 9 horse-power when delivering 116 gallons of water per minute against a head of 38 feet. From (44) and (45); deliver to (47).

47. Two Richards' vortex classifiers each with 3 spigots and 3-inch sorting columns. One hundred gallons of hydraulic water per minute are added, of which 48 gallons go to the first, 34 gallons to the second, and 18 gallons to the third sorting columns. The first spigots discharge 24 gallons, the second spigots 36 gallons, and the third spigots 20 gallons of water per minute. The overflows carry 136 gallons of water per minute. From (46); deliver first spigots to (48), second spigots to (54), third spigots to (56), and overflows to (43).

48. Four 2-compartment Harz jigs with sieves, 17.5 × 32.5 inches, of steel plate with 3-millimeter round holes. The plungers, 18 × 34 inches, make 240 strokes per minute. The strokes of the first plungers are 0.5 inch and of the second 0.375 inch in length. Each handles 10.2 tons per 24 hours and requires 1.4 horse-power. Sixty-four gallons of water per minute are added. The first hutches discharge 24 gallons and the second hutches 28 gallons of water per minute. The tailings carry 60 gallons of water per minute. From (40) and (47); deliver first hutches to (62), second side discharges and hutches to (63), and tailings to (71).

49. Four No. 5 Wilfley tables making 250 strokes per minute. Each handles

7.5 tons per 24 hours and requires 0.3 horse-power. Twenty-four gallons of water per minute are added. The concentrates carry 2 gallons, the middlings 4 gallons, and the tailings 74 gallons of water per minute. From (27); deliver concentrates to (61), middlings to (58), and tailings to (71).

50. Four No. 5 Wilfley tables with power, speed, water, and capacity details as in (49). From (27); deliver concentrates to (61), middlings to (58), and tailings to (71).

51. Four No. 5 Wilfley tables making 260 strokes per minute, with power, water, and capacity details as in (49). From (72); deliver concentrates to (61), middlings to (60), and tailings to (71).

52. Two C. and W. 6-foot plain-belt Frue vanners making 196 strokes per minute and having a speed of about 3 feet per minute. Each handles 5.3 tons per 24 hours and requires 0.2 horse-power. Four gallons of wash water per minute are added. The concentrates carry 0.5 gallon and the tailings 36.5 gallons of water per minute. From (72); deliver concentrates to (61) and tailings to (71).

53. One C. and W. 6-foot plain-belt Frue vanner with details as in (52). Two gallons of wash water per minute are added. The concentrates carry 0.25 gallon and the tailings 18.25 gallons of water per minute. From (72); deliver concentrates to (61) and tailings to (71).

54. Eight No. 5 Wilfley tables making 250 strokes per minute with details as in (49). Forty-eight gallons of water per minute are added. The concentrates carry 4 gallons, the middlings 8 gallons, and the tailings 108 gallons of water per minute. From (40) and (47); deliver concentrates to (61), middlings to (58), and tailings to (71).

55. Two No. 5 Wilfley tables making 260 strokes per minute with details as in (49). Twelve gallons of water per minute are added. The concentrates carry 1 gallon, the middlings 2 gallons, and the tailings 43 gallons of water per minute. From (43); deliver concentrates to (61), middlings to (60), and tailings to (71).

56. Two No. 5 Wilfley tables with details of power and water as in (55). From (40) and (47); deliver concentrates to (61), middlings to (60), and tailings to (71).

57. One C. and W. 6-foot plain-belt Frue vanner with details of power and water as in (53). Handles 6.7 tons per 24 hours. From (43); delivers concentrates to (61) and tailings to (71).

58. Two No. 6 Wilfley tables with details of power and capacity as in (49). Twelve gallons of water per minute are added. From (49), (50), and (54); deliver concentrates to (61) and tailings to (71).

59. One 8-foot Callow cone classifier. The spigot discharge carries 22 gallons and the overflow 150 gallons of water per minute. From (44) and (63); delivers spigot to (60) and overflow to (64).

60. One No. 5 Wilfley table with details of power and capacity as in (49). Six gallons of water per minute are added. From (51), (55), (56), and (59); delivers concentrates to (61) and tailings to (71).

From this point there is but one section for the mill.

61. Three 2.5-inch centrifugal pumps. Each handles 13 gallons of water per minute and requires 6 horse-power. From (49), (50), (51), (52), (53), (54), (55), (56), (57), (58), and (60); deliver to (69).

62. Two Garland wire-rope 7-inch disc conveyors with conveying lengths of 185 feet and speeds of 130 feet per minute. Each requires 2.3 horse-power. From (28), (30), (31), (32), (41), (42), and (48); deliver slimes concentrates to (57) and clean concentrates to (68).

63. Three dewatering boxes with 2 spigots each. The first spigots discharge

80 gallons, the second spigots 128 gallons, and the overflows 80 gallons of water per minute. From (30), (31), (42), and (48); deliver first spigots to (45) second spigots to (59), and overflows to (44).

64. Mill supply sump. Receives 2,914 gallons of water per minute, of which 270 gallons is make-up water coming from the mines. From (33), (34) (43), (59), and (67); delivers to (65).

65. Three DeLaval centrifugal pumps making 1,720 revolutions per minute. Each requires 58 horse-power to lift 1,500 gallons of water per minute against a head of 100 feet. From (64); deliver to (66).

66. One 100,000-gallon storage tank. From (65); delivers to mill system.

67. Ten slimes-concentrates settling tanks, 2 × 10 × 12 feet, with steam pipes in the bottoms. From (62); deliver slimes to smelter and overflows to (64).

68. Two 120-ton concentrates bins. From (62) and (69); deliver concentrates to smelter and slimes to (70).

69. Table concentrates tank. From (61); delivers slimes to (70) and concentrates to (68).

70. Two slimes-concentrates settling tanks, 3 × 16 × 16 feet, with steam pipes in the bottoms. From (68) and (69); deliver pulp to (74).

71. Automatic tailings sampler. From (29), (30), (31), (41), (42), (48), (49), (50), (51), (52), (53), (54), (55), (56), (57), (58), (60), and (72); delivers sample to assayer and reject to (73).

72. Two 4-spigot spitzkasten with sides sloping at 65° (in each of the 3 sections). The first spigots discharge 28 gallons, the second spigots 28 gallons, the third spigots 22 gallons, the fourth spigots 22 gallons, and the overflows 184 gallons of water per minute. From (27); deliver first 2 spigots to (51), third spigots to (52), fourth spigots to (53), and overflows to (71).

73. Tailings settling box, 13 × 23 × 26 feet. Receives 1,579 gallons of water per minute. The overflow carries 1,549 gallons and the settlings 30 gallons of water per minute. From (71); delivers settlings to (78) and overflow to (74).

74. Eighteen annular-overflow settling tanks 20 × 20 feet. The overflows carry 1,309 gallons and the spigots 240 gallons of water per minute. From (70) and (73); deliver spigots to (76) and overflows, via sump, to (75) or waste.

75. Two 8-inch Worthington centrifugal pumps. Each pump requires 36 horse-power to lift 840 gallons of water per minute against a head of 45 feet. From (74); deliver to mill system.

76. Forty-eight canvas tables, 12 × 14 feet, made of 18-ounce duck and sloping 1.56 inches to the foot. From (74); deliver concentrates to (77) and tailings to waste.

77. Two slimes-concentrates tanks, 10 × 35 feet, with steam pipes in the bottoms. From (76); deliver to smelter.

78. Riblet aerial tram, 2,500 feet between the terminals, having a speed of 235 feet per minute, an 8-foot gauge, and 34 buckets each having a capacity of 22 cubic feet and carrying 2,330 pounds of ore.

Cables.	Loaded track	2.25	inches.	6 strand.	25 wire.
	Return "	1.25	"	6 "	19 "
	Traction "	0.875	"	5 "	9 "

Requires 30 horse-power. From (73); delivers to waste.

An average analysis of the concentrates obtained for the year ending November 30, 1907, follows:

Pb	63.675 percent.	Mn	0.33 percent.
Cu	0.45 "	CaO	4.98 "
Zn	1.705 "	MgO	2.935 "
S	13.35 "	Al_2O_3	1.29 "
SiO_2	0.64 "	*CO_2	7.055 "
Fe	3.16 "	Ag	1.025 ounces per ton.

* CO_2 calculated considering CaO and MgO as carbonates.

Out of 369,901 tons of dry crude ore milled during the 12 months above mentioned, 28,468 tons of dry concentrates were produced which assayed 63.7% in lead and represented a saving of 83.1%. Table 126 (see page 504) gives the approximate distribution of products with corresponding assay values.

Labor and Wages.

The mill operates three 8-hour shifts per day, 6 days a week. There are employed about 56 men per shift at an average wage of $1.72 per shift.

Power Plant.

The power plant supplies compressed air for the various mines and electricity for the mill. The equipment consists of six 450 horse-power Heine water-tube boilers, set in two batteries. The steam for the air compressors is taken directly from the steam heaters, and steam for the turbines is passed through Foster superheaters which are fired separately. The engine-room contains 3 Nordberg air compressors with steam cylinders, 16 and 32 inches in diameter, and 42-inch strokes; air cylinders, 17.25 and 28 inches in diameter, and running nominally at 90 revolutions per minute. Each compressor is fitted with a Wheeler surface condenser. The electrical equipment comprises three 500-kilowatt, 3-phase, 440-volt, 60-cycle, Curtis turbine generators, each fitted with Wheeler surface condensers. One steam-driven exciter and one motor exciter, together with a 10-panel switchboard fitted with a Turrell voltage regulator, meters, etc., complete the equipment.

The power input to all motors is at 440 volts.

The power, as distributed throughout the flow-sheet (see Table 127), is under conditions of normal load only.

TABLE 127. — POWER SUMMARY.

Department.	Number of Motors.	Horse-power Each.	Make.	Total Horse-power.	Operating Average.	Power Factor.	Amperes.
Breaking plant	2	250	General Electric	500	482	0.79	600
Conveying and sampling plant	1	50	" "	50	28	0.76	36
Jig room and elevators	6	50	" "	300	294	0.91	316
Rolls	3	25	" "	75	57	0.72	78
Huntington mills and pump	3	50	Allis-Chalmers	150	108	0.88	120
Table room	6	20	General Electric	120	72	0.60	117
Concentrates conveyor	1	10	" "	10	9	0.80	11
Shaking launder	5	3	" "	15	5	0.55	18
Aerial tramway	1	35	" "	35	30	0.81	36
Totals and averages	28			1,255	1,085	0.80	1,332
Water Data (2 sections of mill operating)	3	75	General Electric	225		0.93	122
Power required by mill-supply and return-water pump	2	40	Westinghouse	80		0.82	43

Water.

For a summary giving the number of gallons of water used by each machine see Table 128. (See page 505.) Table 129 (see page 505) gives a summary of the water circulation.

Cost of Producing Pig Lead in Flat River District.

The average cost of producing pig lead for the St. Louis market from this field seems to be from 3 to 3.25 cents per pound. In the years following the panic of 1893, these properties produced pig lead without loss for less than 2.6 cents per pound; but during the boom period of 1906–07, it is doubtful if any of the mines were producing it for less than 4.0 cents.

TABLE 126. — APPROXIMATE DISTRIBUTION OF ORE, CONCENTRATES, MIDDLINGS, AND TAILINGS.

Machine.	Ore.			Concentrates.			Middlings.			Tailings.			Recovery in Concentrates. Percent of Original.
	Lead.			Lead.			Lead.			Lead.			
	Tons. Dry Weight. 24 Hours.	Assay. Percent.	Contents. Pounds.	Pounds. Dry Weight. 24 Hours.	Assay. Percent.	Contents. Pounds.	Pounds. Dry Weight. 24 Hours.	Assay. Percent.	Contents. Pounds.	Pounds. Dry Weight. 24 Hours.	Assay. Percent.	Contents. Pounds.	
9-millimeter jigs	625.0	2.75	34,375	14,713	51.90	81,645	1,235,287	2.08	25,730	.....	.....	.....	25.10
7 " "	725.0	4.76	69,085	52,000	68.70	35,700	320,000	7.40	23,674	1,078,000	0.90	9,711	51.70
4 " "	400.0	7.00	56,000	55,000	70.70	38,880	260,000	5.09	13,232	485,000	0.80	3,888	69.40
2 " "	230.0	9.00	41,400	51,100	70.60	36,072	160,000	1.63	2,601	248,900	1.09	2,727	87.10
Wilfley tables	300.0	8.00	48,000	64,000	58.10	37,170	80,000	5.54	4,432	456,000	1.40	6,398	77.40
6-foot vanners	48.0	7.52	7,220	7,000	65.00	4,550	.....	.....	.....	89,000	3.00	2,670	63.00
Oversize jigs, re grind	500.0	2.10	21,000	18,500	55.30	10,233	140,000	1.68	2,342	841,500	1.00	8,425	48.70
4-millimeter jigs, regrind	220.0	4.00	17,600	19,000	64.40	12,240	100,000	3.11	3,106	321,000	0.70	2,254	69.50
2 " " "	122.6	6.05	14,834	17,493	66.00	11,543	50,000	2.97	1,486	177,794	1.01	1,803	77.80
Wilfley tables, regrind	310.0	3.32	20,579	26,000	51.90	13,502	.....	.....	.....	594,000	1.19	7,077	65.60
6-foot vanners	20.0	6.47	2,590	2,500	65.00	1,625	.....	.....	.....	37,500	2.57	967	62.70
Totals	3,500.6	.....	332,683	327,306	64.20	210,160	2,345,287	3.27	76,603	4,328,694	1.06	45,920	82.07
Deduct middlings	1,172.6	.....	76,603	.....	.....	.....	.....	.....	.....	.....	.....	.....	.....
Canvas tables	.....	.....	.....	14,134	35.00	4,947	.....	.....	.....	.....	.....	.....	.....
Totals and averages	2,328.0	5.50	256,080	341,440	63.00	215,107	.....	.....	.....	4,314,560	0.95	40,973	84.00

Assumed for calculation:

Moisture ..... 3.0 percent.
Assay of ore ..... 5.5 "
" " concentrates ..... 63.0 "
Recovery ..... 84.0 " Including canvas tables.

NOTE. — Assays are given in two places of decimals only.

TABLE 128. — SUMMARY OF WATER USED IN GALLONS PER MACHINE.

Machine.	Number per Section.	Spray.	Oversize.	Water Received with Ore.	Spigot.			Tailings.		Sizing.					
					First Concentrates.	Second Middlings.	Third Middlings.	To Dewatering Box.	To Tailings Settlings Box.	First Spigot to 2-millimeter Jigs.	Second Spigot to Wilfleys.	Third Spigot to Wilfleys.	Overflow to Spitzkasten.	Average Hydraulic per Plunger.	Clear Wash Water.
7-millimeter trommels, 48 by 108 inches	4	26	16	....	....	....	....	....	....	....	....	....	....	....	....
4 " " 36 by 108 "	4	16	16	26.0	....	....	....	....	....	....	....	....	....	....	....
2 " " 36 by 108 "	4	15	16	42.0	....	....	....	....	....	....	....	....	....	....	....
Richards' 3-spigot vortex classifiers with 3-inch sorting columns	4	....	....	57.0	....	....	....	....	....	34	20	12	71	....	....
9-7-millimeter jigs, 1 compartment, sieves 17.5 by 32.5 inches	8	....	....	8.0	15	....	....	24	....	....	....	....	....	31.00	....
7-4-millimeter jigs, 3 compartment, sieves 17.5 by 32.5 inches	8	....	....	8.0	9	12	13	....	22	....	....	....	....	16.00	....
4-2-millimeter jigs, 3 compartment, sieves 17.5 by 32.5 inches	8	....	....	8.0	8	8	9	....	20	....	....	....	....	12.33	....
0-2-millimeter jigs, 2 compartment, sieves 17.5 by 32.5 inches	8	....	....	12.0	6	7	....	....	15	....	....	....	....	8.00	6
Number 5 Wilfley tables	12	....	....	14.0	....	....	....	....	....	....	....	....	....	....	....
6-foot C. and W. vanners	4	....	....	16.5	....	....	....	....	....	....	....	....	....	....	2
4-millimeter re-grind trommels, 48 by 108 inches	2	16	16	1.5	....	....	....	....	....	....	....	....	....	....	....
2-millimeter re-grind trommels, 36 by 108 inches	2	15	16	31.0	....	....	....	....	....	....	....	....	....	....	....
Richards' 3-spigot vortex classifiers with 3-inch sorting columns, re-grind	4	....	....	52.0	....	....	....	....	....	24	17	9	82	....	....
Oversize jigs, re-grind, 3 compartment	8	....	....	4.0	9	12	13	....	22	....	....	....	....	17.34	....
4-2-millimeter jigs, re-grind, 3 compartment	4	....	....	8.0	8	8	9	....	20	....	....	....	....	12.33	....
0-2-millimeter jigs, re-grind, 2 compartment	4	....	....	12.0	6	7	....	....	15	....	....	....	....	8.00	....

NOTE. — Re-grind and middlings Wilfleys not listed.

TABLE 129. — SUMMARY OF WATER CIRCULATION.

Machine.	Number per 2 Sections.	Fresh Water per Machine. Gallons per Minute.	Total Fresh Water. Gallons per Minute.	Amount to Return System. Gallons per Minute.	Amount to Tailings Settlings Box. Gallons per Minute.
7-millimeter trommels, 48 by 108 inches	4	42	168	....	....
4 " " 36 by 108 "	4	32	128	....	....
2 " " 36 by 108 "	4	31	124	....	....
4 " " re-grind, 48 by 108 inches	2	32	64	....	....
2 " " " 36 by 108 "	2	31	62	....	....
9-7 " " jigs, 1 compartment, sieves 17.5 by 32.5 inches	8	31	248	....	....
7-4 " " 3 " " 17.5 by 32.5 "	8	48	384	....	176
4-2 " " 3 " " 17.5 by 32.5 "	8	37	296	....	160
0-2 " " 2 " " 17.5 by 32.5 "	8	16	128	....	120
Richards' 3-spigot vortex classifiers — direct	4	66	264	....	....
Number 5 Wilfley tables — direct	12	6	72	....	222
6-foot C. and W. vanners	4	2	8	....	73
Oversize jigs, re-grind, 3 compartments	8	52	416	....	176
4-2-millimeter jigs, re-grind, 3 compartments	4	37	148	....	80
0-2 " " " 2 "	4	16	64	....	60
Richards' 3-spigot vortex classifiers, re-grind	4	50	200	....	....
Number 5 Wilfley tables, re-grind	12	6	72	....	194
" " " " middlings	3	6	18	....	64
4-spigot Spitzkasten, direct	2	....	....	....	184
4 " " " e-grind	1	....	....	198	....
Slimes-concentrates settling tanks and concentrates bins	....	....	....	....	20
Dewatering box and shovel wheel	....	....	....	562	....
Cone classifier	....	....	....	150	....
Slimes-concentrates settling tanks	....	....	....	425	....
Miscellaneous wash water	....	....	50	....	50
Totals	....	....	2,914	1,335	1,579

Total fresh water available from mines ..... 1,300 gallons per minute.
" water required from settling tanks ..... 3,437 " " "
" " available from return-water system ..... 4,005 " " "

Total water required for three double sections ..... 8,742 " " "

Table 130 gives in detail the costs under the best and worst conditions for mining and milling in the Flat River district. The average total mining cost is nearer $1.30 than $1.86, and some mines average even less than $1.30 per ton.

TABLE 130. — MAXIMUM AND MINIMUM COSTS IN THE FLAT RIVER DISTRICT.

	Cost per Ton. Minimum.		Maximum.
Labor	$0.970	to	$1.190
Coal and air charge	0.120	to	0.290
Blasting	0.086	to	0.120
Supplies	0.032	to	0.069
Repairs	0.086	to	0.147
Sundry charges	0.011	to	0.042
Total mining	$1.305		$1.858
Labor	$0.078	to	$0.100
Supplies	0.024	to	0.036
Water	0.002	to	0.010
Crushing	0.017	to	0.040
Maintenance	0.021	to	0.039
Other departments	0.022	to	0.028
Chemist	0.083	to	0.085
Miscellaneous	0.001	to	0.001
Total milling	$0.248		$0.339

§ 656. CONCENTRATING MILLS OF THE EMPIRE ZINC COMPANY, CANON CITY, COLORADO. — This flow-sheet is given to show the magnetic method of dry separation employed on Western zinc ores. The breaking plant for both the wet and dry mills is shown in Fig. 283. Three horse-power is required per ton of ore treated to run the machinery in this department.

The ores from various mines are delivered to (1).

1. Railway cars. From the mines; deliver to (2).

2. Grizzly with 1-inch spaces between the bars, 78 inches long by 30 inches wide, and having a slope of about 26°. There are 18 bars, each 0.75 × 2 × 78 inches. From (1); delivers oversize to (3) and undersize to (4).

3. Blake breaker with a jaw opening 10 × 20 inches and making 230 thrusts per minute. From (2); delivers crushed ore to (4).

4. Two 18-inch belt conveyors with 8-ply canvas belts having conveying lengths of 10 feet, speeds of 260 feet per minute, and slopes of 12°. From (2) and (3); deliver to (5).

5. Sixteen-inch elevator with an 8-ply canvas belt having a speed of 300 feet per minute, 14-inch pressed-steel buckets set 20 inches apart, and elevating the ore 20.5 feet. From (4) and (8); delivers to (6).

6. Rigid, steel, perforated plate, 18 × 72 inches, having perforations 0.5 × 1 inch and a slope of 43°. From (5); delivers oversize to (7) and undersize to (9).

7. Geared rolls, 16 × 36 inches, making 28 revolutions per minute, and having forged-steel shells. From (6); deliver crushed ore to (8).

8. Trommel, 2.5 × 8.5 feet, making 20 revolutions per minute, and having sheet-steel plates with perforations 0.5 × 1 inch. From (7); delivers oversize to (5) and undersize to (9).

9. Fourteen-inch elevator with an 8-ply canvas belt having a speed of 300 feet per minute, 12-inch pressed-steel buckets set 20 inches apart, and elevating the ore 55 feet. From (6) and (8); delivers to (10).

10. One wooden crushed-ore bin having a capacity of 250 tons and a bottom sloping at 50°. From (9); delivers, via ore feeder and chute, periodically to (11) and (38).

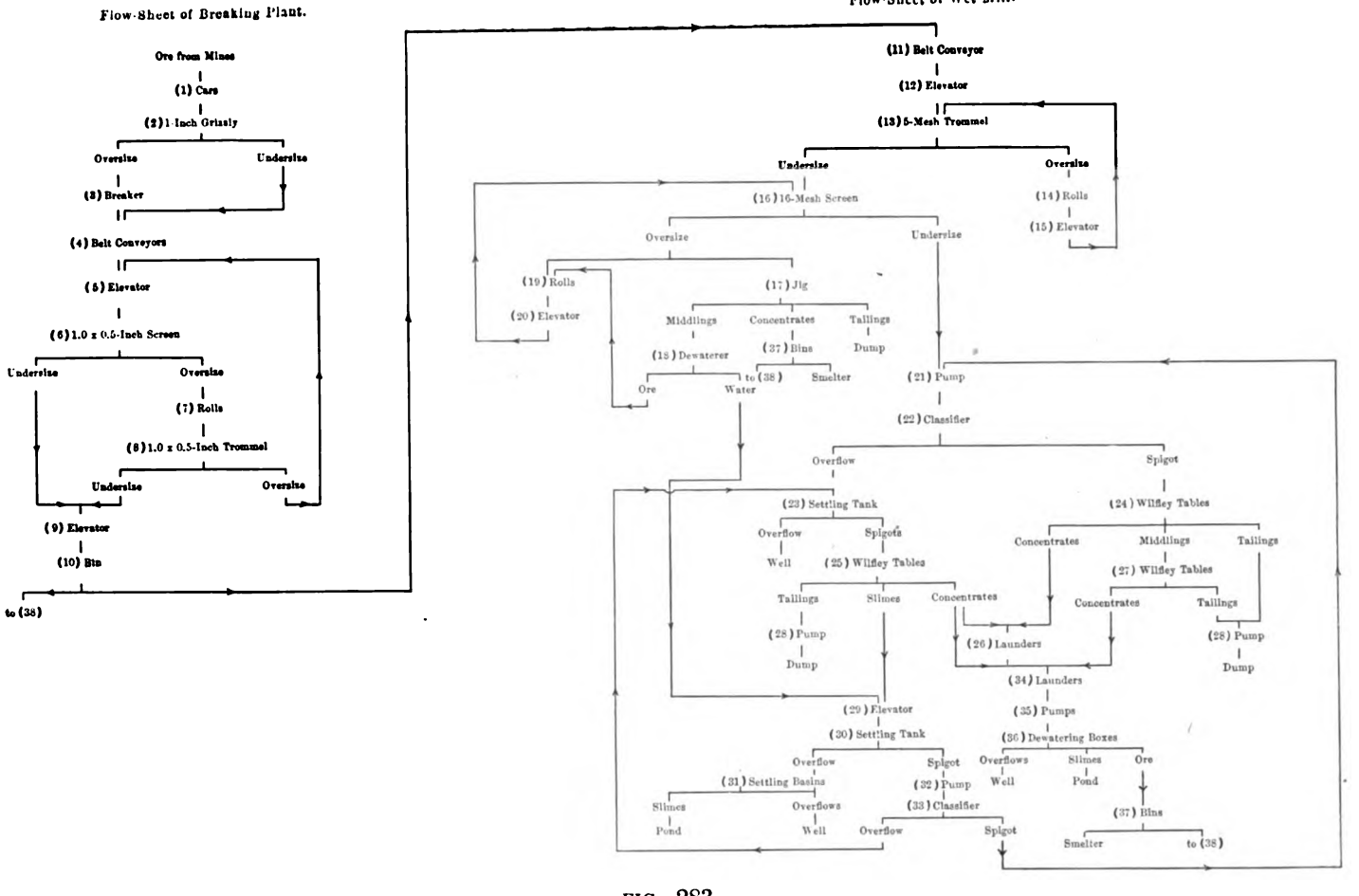
Flow-Sheet of Breaking Plant.
Ore from Mines
(1) Cars
(2) 1-Inch Grizzly
Oversize
Undersize
(3) Breaker
(4) Belt Conveyors
(5) Elevator
(6) 1.0 x 0.5-Inch Screen
Undersize
Oversize
(7) Rolls
(8) 1.0 x 0.5-Inch Trommel
Undersize
Oversize
(9) Elevator
(10) Bin
to (38)
Flow-Sheet of Wet Mill.
(11) Belt Conveyor
(12) Elevator
(13) 5-Mesh Trommel
Undersize
Oversize
(14) Rolls
(15) Elevator
(16) 16-Mesh Screen
Oversize
Undersize
(19) Rolls
(20) Elevator
(17) Jig
Middlings
Concentrates
Tailings
(18) Dewaterer
(37) Bins
Dump
Ore
Water
to (38)
Smelter
(21) Pump
(22) Classifier
Overflow
Spigot
(23) Settling Tank
Overflow
Spigot
Well
(25) Wilfley Tables
Tailings
Slimes
Concentrates
(28) Pump
Dump
(24) Wilfley Tables
Concentrates
Middlings
Tailings
(27) Wilfley Tables
Concentrates
Tailings
(28) Pump
Dump
(26) Launders
(34) Launders
(29) Elevator
(35) Pumps
(30) Settling Tank
(36) Dewatering Boxes
Overflow
Spigot
Overflows
Slimes
Ore
(31) Settling Basins
(32) Pump
Well
Pond
Slimes
Overflows
(33) Classifier
(37) Bins
Pond
Well
Overflow
Spigot
Smelter
to (38)

FIG. 283.

Wet Mill (*Fig.* 283).

This mill has a capacity of 50 tons per 24 hours and was erected in 19[illegible] before magnetic separation was found suitable for many of the Colorado zinc ores. It handles ores containing galena and sphalerite with pyrite and silica but since the erection of the dry mill the wet mill is only used for such ores as are suitable for that treatment and cannot be satisfactorily worked magnetically. The problem is to save the gold and silver-bearing galena and sphalerite. This department requires 23 horse-power to run the machinery and shafting per ton of ore treated.

11. Fourteen-inch belt conveyor with a 6-ply rubber belt having a conveying length of 11 feet, a speed of 250 feet per minute, and run level. From (10) delivers to (12).

12. Thirteen-inch elevator with a 6-ply canvas belt having a speed of 300 feet per minute, 12-inch pressed-steel buckets set 36 inches apart, and elevating the ore 36.67 feet. From (11); delivers to (13).

13. Trommel with a screen having 5 meshes to the inch. Water is first introduced here. From (12) and (15); delivers oversize to (14) and undersize to (16).

14. Rolls, 16 × 36 inches, making 55 revolutions per minute and having forged-steel shells. From (13); deliver crushed ore to (15).

15. Thirteen-inch elevator with a 6-ply rubber belt having a speed of 300 feet per minute, 12-inch pressed-steel buckets set 36 inches apart, and elevating the ore 41.42 feet. From (14); delivers to (13).

16. Callow duplex belt screen using 16 and 18-mesh, No. 26 and 28-brass wire-cloth screens respectively, and having a speed varying according to the capacity required. No. 30 gauge wire is better than 26 and is about the coarsest that should be used, as the wear is due to bending the wires around the drum rather than to the direct wear of the ore. A screen lasts about 5 weeks and handles about 1,500 tons of ore. It does good work and should be especially satisfactory on the finer sizes. This screening was formerly performed by shaking screens, but these were expensive to keep up and were the cause of many shut-downs. From (13) and (20); delivers oversize to (17) or (19) and undersize to (21).

17. One New Century, 5-compartment, drop-motion jig. Jig and plunger compartments of same size, the sieves being made of perforated brass-plate. 23.5 × 35 inches. 0.094-inch holes in No. 16 plate, also 0.084-inch and 0.05-inch holes in No. 22 plate, are used. Plungers make 155 strokes per minute. From (16); delivers lead or iron product, via wheelbarrow, to (37), middlings to (18), and tailings to dump.

18. Belt scraper or dewaterer having sheet-steel blades, 5 × 5 × 12 inches, bolted 6 inches apart onto a rubber belt 12 inches wide traveling up a 34° slope at a speed of 35.3 feet per minute. Pulleys are 30 inches in diameter and 13.5 feet between centers. A wooden bottom extends all along the lower half of the belt and about 6 inches below it. Designed by R. M. Henderson. From (17); delivers ore to (19) and water to (29).

19. Rolls 16 × 36 inches, making 75 revolutions per minute and having forged-steel shells. From (16) and (18); deliver crushed ore to (20).

20. Thirteen-inch elevator with a 6-ply rubber belt having a speed of 300 feet per minute, 12-inch pressed-steel buckets set 30 inches apart, and elevating the ore 34.5 feet. From (19); delivers to (16).

21. Boggs and Clarke No. 2 centrifugal pump having a capacity of about 45 tons and a lift of 15.5 feet. From (16) and (33); delivers to (22).

22. Iron cone classifier 20 inches in diameter and 43 inches high. From (21); delivers spigot to (24) and overflow to (23).

23. Iron V-shaped settling tank, 8 × 10 × 16 feet, having 9 spigots. From (22) and (33); delivers spigots to (25) and overflow to well.

24. Two No. 4 Wilfley tables making 250 strokes per minute. From (22); deliver lead and zinc products to (26), middlings to (27), and tailings to (28).

25. Four No. 4 Wilfley tables making 250 strokes per minute. From (23); deliver lead and zinc products to (26) and (34), tailings to (28), and slimes to (29).

26. Two 49-foot shaking launders making 200 1-inch strokes per minute, having slopes of 0.125 inch to the foot, and driven by a Wilfley No. 4 special head-motion. From (24) and (25); deliver to (34).

27. Two No. 4 Wilfley tables making 250 strokes per minute. From (24); deliver lead and zinc products to (34) and tailings to (28).

28. Boggs and Clarke No. 1.5 centrifugal pump having a lift of 12 feet. From (24), (25), and (27); delivers to dump.

29. Thirteen-inch elevator with a 6-ply rubber belt having a speed of 300 feet per minute, 12-inch pressed-steel buckets set 18 inches apart, and elevating the ore 20.17 feet. From (18) and (25); delivers to (30).

30. Wooden V-shaped settling tank, 8 × 12 × 14 feet. From (29); delivers spigot to (32) and overflow to (31).

31. Circular settling basins, 27.5 feet in diameter and 3 feet deep at the centers and 1 foot at the rims. From (30); deliver settled slimes to settling pond and clear water overflows to well.

32. Boggs and Clarke No. 1.5 centrifugal pump having a lift of 30 feet. From (30); delivers to (33).

33. Galvanized-iron cone classifier, 12 inches in diameter. From (32); delivers spigot to (21) and overflow to (23).

34. Two 16-foot shaking launders making 250 0.5-inch strokes per minute, having slopes of 0.25 inch to the foot, and driven by a No. 4 Wilfley head-motion. Suspended by boards from beams overhead. From (25), (26), and (27); deliver to (35).

35. Two Frenier spiral sand pumps. One, 6 × 54 inches, having a lift of 17 feet; and the other, 10 × 54 inches, having a lift of 20 feet. From (34); deliver to (36).

36. Four wooden dewatering boxes, 25 × 30 × 69 inches. From (35); deliver to (37), slimes to settling pond, and clear water to well.

37. Two wooden shipping bins each having a capacity of 250 tons and bottoms sloping 50°. One bin for lead-iron products and one for zinc-iron products. From (17) and (36); deliver, via ore feeders, chutes, and railroad cars, to smelters. If much pyrite is present in the zinc-iron product it is delivered, via feeder and chute, to (38).

In the wet mill there are employed two 12-hour shifts, excepting in some cases where the men are required to do heavy, continuous, manual labor, when the shifts are but 8 hours long. There are 3 men to a shift outside of those employed in loading the products from the shipping bins into the cars. Wages vary from $2 to $3.50 per shift.

Water for running the wet mill and for fire protection is obtained from a reservoir at the foot of the hills, 2 miles away and at an elevation of 440 feet. The amount of water used has never been measured, but an estimate of 150 gallons or less of fresh water, per ton of ore treated, when the wet mill is running continuously, has been given. Owing to the limited water supply available, all water leaving the mill is settled and, together with the clean water from the settling basins and wells, is re-used.

Dry Mill (*Fig.* 284).

This department has a capacity of 150 tons per 24 hours and handles ore containing galena and sphalerite with pyrite and silica which are obtained from Leadville, Breckenridge, and other places. The problem is to separate the zinc minerals from the others. The ore is crushed and dried but not roasted. It is then screened to the proper sizes and treated on magnetic separators. The machinery from numbers (40) to (50) inclusive requires 4.5 horse-power and the remainder of the machinery, including direct-current generators and shafting, requires 24 horse-power, per ton of ore treated.

38. Twelve-inch belt conveyor with a 6-ply rubber belt having a conveying length of 98 feet, a speed of 155 feet per minute, and a slope, for a part of the way, of 19°. From railroad cars, (10), and sometimes from (37); delivers to (39).

39. Two cast-iron revolving driers, 23 feet long by 40 inches in diameter, having no lining and making 5 revolutions per minute. (38) and (39) are driven by a 20 horse-power General Electric alternating-current motor, through shafting, belts, and gears. From (38); deliver dry ore to (40).

40. Hoe conveyor, 1.4 × 40.5 feet, with paddles set 9 inches apart and driven by a crank-arm motion. From (39); delivers to (41).

41. Thirteen-inch elevator with a 6-ply rubber belt having a speed of 300 feet per minute, 12-inch pressed-steel buckets set 18 inches apart, and elevating the ore 48.5 feet. From (40) and (43); delivers, via roller feeder, to (42).

42. Rowand incline screen with perforated steel plates, 4 plates wide by 10 plates high, having slots 2.54 × 1.47 millimeters. Height required, including roller feeder, 19 feet. Very satisfactory for dry screening. From (41); delivers oversize to (43) and undersize to (44).

43. Rolls, 16 × 36 inches, making 55 revolutions per minute and having forged-steel shells. From (42); deliver crushed ore to (41).

44. Thirteen-inch elevator with a 6-ply rubber belt having a speed of 300 feet per minute, 12-inch pressed-steel buckets set 18 inches apart, and elevating the ore 48.5 feet. From (42) and (46); delivers, via roller feeder, to (45).

45. Rowand incline screen with slots 2.54 × 0.61 millimeter and other details like those in (42). From (44); delivers oversize to (46) and undersize to (47).

46. Rolls, 16 × 36 inches, making 80 revolutions per minute and having forged-steel shells. From (45); deliver crushed ore to (44).

47. Eleven-inch elevator with a 6-ply rubber belt having a speed of 300 feet per minute, 10-inch pressed-steel buckets set 18 inches apart, and elevating the ore 41 feet. From (45) or (48); delivers to (48) or (49).

48. One wooden storage bin having a capacity of 80 tons and a bottom sloping at 50 degrees. From (47); delivers, via ore feeder and chute, to (47).

49. Dust remover which consists of a roller for distributing the ore in a stream through which air is pulled by means of 2 exhaust fans, the amount removed being regulated by openings in the front of the casing. Satisfactory. From (47); delivers dust to (69) and dust-free ore to (50) or (55).

50. Eighteen-inch belt conveyor with a 6-ply rubber belt having a conveying length of 15.75 feet, a speed of 250 feet per minute, and run level. From (49), delivers to (51).

51. One Rowand, "type F," magnetic separator. From (50); delivers magnetic product to (52) and non-magnetic product to (55).

52. Six-inch belt conveyor with a 3-ply rubber belt having a conveying length of 33 feet, a speed of 250 feet per minute, and run level. From (51); delivers to (53).

53. Seven-inch elevator with a 5-ply rubber belt having a speed of 210

feet per minute, 6-inch pressed-steel buckets set 18 inches apart, and elevating the ore 38.33 feet. From (52); delivers to (54).

54. Wooden shipping bin having a capacity of 50 tons and a flat bottom. From (53); delivers, via ore feeder and railroad cars, to smelters.

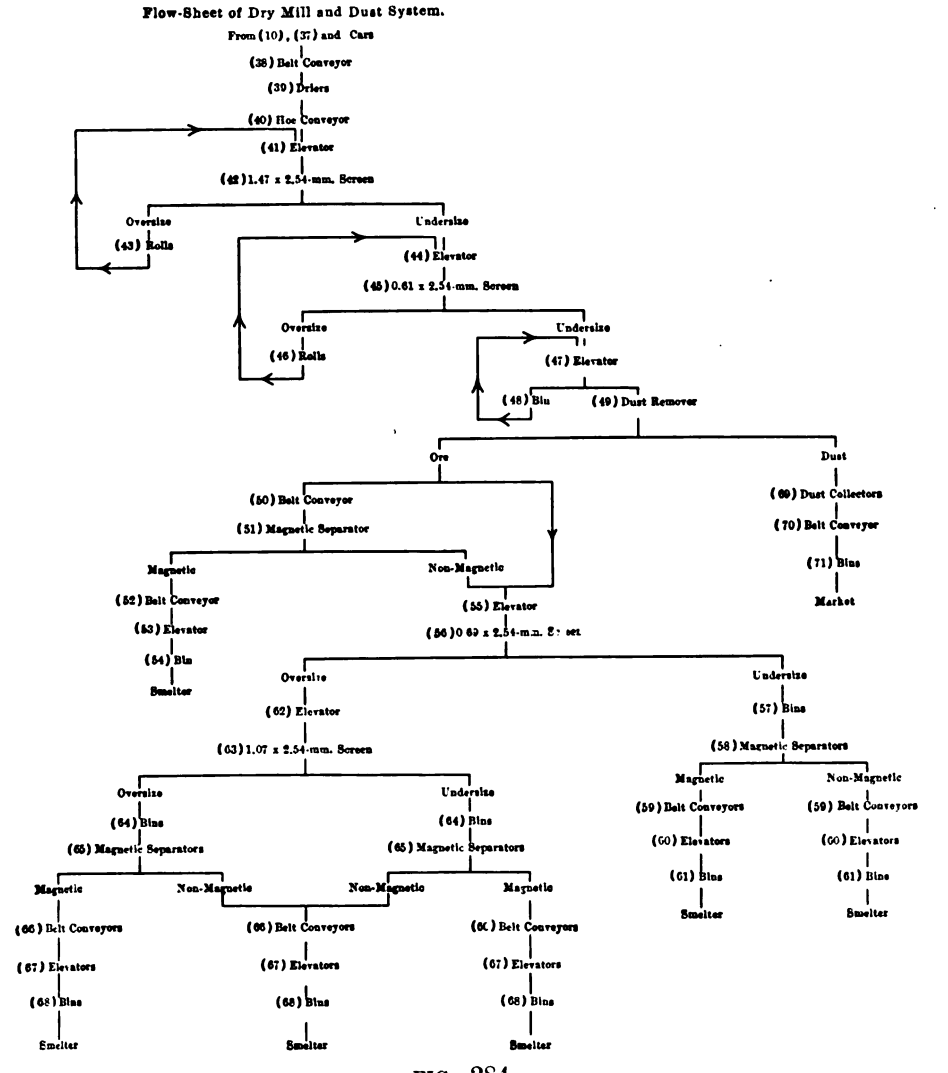

FIG. 284.

55. Eleven-inch elevator with a 6-ply rubber belt having a speed of 300 feet per minute, 10-inch pressed-steel buckets set 18 inches apart, and elevating the ore 53.25 feet. From (49) and (51); delivers, via roller feeder, to (56).

56. Rowand incline screen with slots 2.54 × 0.69 millimeter and other details like those in (42). From (55); delivers oversize to (62) and undersize to (57).

57. Wooden storage bins each having a capacity of 50 tons and a flat bottom. From (56); deliver, via ore feeder, to (58).

58. Six Wetherill-Rowand, "type E," magnetic separators each having a capacity of 0.5 ton per hour. These machines, together with those in (65) require 42 amperes with 120 volts from a direct-current generator and each has 3 sets of magnets; the first with 30,000, the second with 60,000, and the third with 100,000 ampere turns. Repairs are stated to be few and the work very satisfactory. From (57); deliver products separately to (59).

59. Six-inch belt conveyors, with 3-ply rubber belts having conveying lengths of 35 feet, speeds of 250 feet per minute, and run level. From (58) deliver to (60).

60. Six 7-inch elevators with 5-ply rubber belts having speeds of 210 feet per minute, 6-inch pressed-steel buckets set 18 inches apart, and elevating the ore 38.33 feet. From (59); deliver to (61).

61. Wooden shipping bins each having a capacity of 50 tons and a flat bottom. From (60); deliver, via ore feeder and railroad cars, to smelters.

62. Eleven-inch elevator with a 6-ply rubber belt having a speed of 300 feet per minute, 10-inch pressed-steel buckets set 18 inches apart, and elevating the ore 27.75 feet. From (56); delivers, via roller feeder, to (63).

63. Rowand incline screen with slots 2.54 × 1.07 millimeters and other details like those in (42). From (62); delivers oversize and undersize to separate bins in (64).

64. Eleven wooden storage bins each having a capacity of from 15 to 20 tons with a bottom sloping at 58°. From (63); deliver periodically, via iron gates and spouts, to (65).

65. Four Wetherill-Rowand, "type E," magnetic separators with details like those in (58). From (64); deliver products to (66).

66. Four 6-inch belt conveyors with 3-ply rubber belts having conveying lengths of 43 feet, speeds of 250 feet per minute, and run level. From (65) deliver to (67).

67. Four 7-inch elevators with 5-ply rubber belts having speeds of 210 feet per minute, 6-inch pressed-steel buckets set 18 inches apart, and elevating the ore 38.33 feet. From (66); deliver to (68).

68. Wooden shipping bins each having a capacity of 50 tons and a flat bottom. From (67); deliver, via ore feeder and railroad cars, both iron and zinc products to smelters.

Dust System (*Fig.* 284).

69. Three Cyclone dust collectors. From (49) and all screen and roll housings, conveyors, elevators, etc., and deliver the dust to a bag house in which are cotton bags 30 feet long. The dust collected in these bags is delivered to (70).

70. Twelve-inch belt conveyor with a 3-ply rubber belt having a conveying length of 79.5 feet, a speed of 235 feet per minute, and a slope, for a part of the way, of 30°. From (69); delivers to (71).

71. Two wooden shipping bins each having a capacity of 200 tons and a flat bottom. From (70); deliver, via shovel and wheelbarrows, to railroad cars and thence to market.

Trommels were formerly used for screening, but gave considerable trouble and were replaced by the stationary inclined screen designed by Mr. Lewis G. Rowand. This screen has proved very satisfactory, having a large capacity and a small repair cost. It is also so designed that a very small amount of the dust escapes into the air, which, of course, is a decided advantage to the men working in the mill.

Labor and Wages.

The ore is handled in the yard and taken into the mill by contract, the contractors working 8-hour shifts. They pay their men from $2 to $2.50 per shift, according to the ability of the men.

The dry mill is run on 8-hour shifts, about 20 men being employed in 24 hours, 6 days a week. This number includes the day men on the loading and repair gang. Outside men work a 10-hour shift in the daytime. Rates of pay are from $2 to $3.25 per shift.

Power.

The various portions of the mill are driven by electric motors with an alternating 440-volt current supplied from a central power station two miles distant.

§ 657. SILVER LAKE MILL, GARFIELD SMELTING COMPANY, SILVERTON, COLORADO. — This mill has a capacity of 300 to 350 tons per 24 hours, while the breaking department will handle 450 tons per 24 hours. The mill was constructed in the latter part of 1906 and is based on six years' experience with an older mill which it replaces. It is given here to show the most modern Colorado silver-lead practice. The economic minerals are galena, chalcopyrite, pyrite, and sphalerite with gold and silver values in a gangue of quartz and rhodochrosite. The problem is to save the lead, copper, gold, and silver values.

The flow sheet of this mill is illustrated in Fig. 285 and it may be said that this method of plotting mill schemes is rapidly coming into favor; not only because of the simplicity and ease of reading such a diagram, but also because diagrammatical sketches of this type may be so easily and conveniently folded up and kept in a loose-leaf book of pocket size and readily accessible.

The ore is broken at the mine to pass a 2.5-inch ring and is delivered, via aerial tramway, to (1) at the mill.

Breaking Department.

The coarse and fine-crushing plants run 20 hours daily and the capacities and machine products are given in tons per 20 hours.

1. Silver Lake tramway receiving bin. From the tramway; delivers, via two plungers, to (2).

2. Two Colorado Iron Works breakers, with 4 × 24-inch jaw openings, breaking to 1 inch, and making 280 thrusts per minute. Each handles 150 tons and requires 6.39 horse-power when empty and 12.37 horse-power under normal load. From (1); deliver crushed ore, via elevator with a 28-foot lift, which, together with (9), requires 0.57 horse-power when empty and 1.29 horse-power under normal load, to (3).

3. One 20-inch belt conveyor with a conveying length of 80 feet and a speed of 320 feet per minute. Handles 300 tons and requires 2.23 horse-power when empty and 2.73 horse-power under normal load. From (2); delivers to (4).

4. One Harrington and King trommel, 4 × 8 feet, having 15-millimeter round holes punched 0.875 inch between centers, in No. 3 steel, 18 spokes and a shaft, 3.4375 inches in diameter, which has a slope of 1.75 inches to the foot. Driven by gear and pinion at 17 revolutions per minute and has a life of 385 days or while the mill handles 89,863 tons. Run dry. Handles 647 tons and requires 0.32 horse-power when empty and 2.54 horse-power under normal load. From (3) and (6); delivers oversize to (5) and undersize to (7).

5. F. M. Davis rolls, 16 × 36 inches, making 100 revolutions per minute and set to crush to 0.25 inch. Midvale steel shells weigh, when new, 8,020 pounds, last 175 days or while the mill handles 45,392 tons, and when worn out weigh 1,299 pounds. Latrobe steel shells weigh, when new, 9,012 pounds, last 181 days or while the mill handles 38,684 tons, and when worn out weigh 1,302 pounds. Steel cheek plates weigh, when new, 705 pounds, last 356 days or while the mill handles 84,076 tons, and when worn out weigh 456 pounds. Phosphor-bronze wearing parts weigh, when new, 612 pounds, last 356 days or while the mill handles 84,076 tons, and when worn out weigh 420 pounds.

Run dry. Handle 347 tons (270 tons on the first pass and 77 tons returned) and require 7.12 horse-power when empty and 19.27 horse-power under normal load. From (4); deliver crushed ore to (6).

6. Bucket elevator having a speed of 302 feet per minute and buckets 7 × 12 inches, placed 20 inches apart, which elevate the ore 37 feet. Handles 347 tons and requires 1.78 horse-power when empty and 2.92 horse-power under normal load. From (5); delivers to (4).

7. One 18-inch belt conveyor having a conveying length of 160 feet and a speed of 230 feet per minute. Handles 300 tons and requires 1.85 horse-power when empty and 3.85 horse-power under normal load. From (4); delivers to (8).

Concentrating Department.

This department runs 24 hours daily. The capacities and machine products are given in tons per 24 hours and the water in gallons per minute.

8. Silver Lake mill ore bin of 600 tons' capacity. From (7); delivers to (9).

9. Plunger feeder with a 5-inch stroke. Handles 300 tons. For power see (2). From (8); delivers to (10).

The mill feed, at this point, gives the following sizing test:

Through	15	on	9	millimeters	28.0 percent.
"	9	"	6	"	21.0 "
"	6	"	4	"	14.0 "
"	4	"	2	"	12.0 "
"	2			"	25.0 "
Total					100.00 "

10. Vezin sampler making 20 revolutions per minute and cutting out 5.0% of the ore. From (9); delivers sample to (11) and rejects to (12).

11. Vezin sampler with details as in (10). From (10); delivers sample, which amounts to 5 pounds per ton of original ore, to the bucking room and rejects to (12).

12. Bucket elevator having a speed of 350 feet per minute and buckets 7 × 14 inches, placed 24 inches apart, which elevate the ore 54 feet. Handles 560 tons of ore and 82 gallons of water besides 10 gallons of hydraulic water. Together with (23) requires 3.69 horse-power when empty and 8.58 horse-power under normal load. From (10), (11), (14), and (16); delivers to (13).

13. Two trommels, 3.5 × 6 feet, having 9-millimeter round holes punched, 0.5625 inch between centers, in No. 6 steel, and shafts, 3.1875 inches in diameter, which have slopes of 0.75 inch to the foot. Each has a life of 287 days or while the mill handles 64,936 tons. Run wet. Handle 560 tons of ore with 92 gallons of water in the feed and 34 gallons of hydraulic water. Together with (17), (19), (24), and (27) require 0.93 horse-power when empty and 6.88 horse-power under normal load. Other details as in (4). From (12); deliver oversize, via mixing box, to (14) and undersize to (17).

14. One double 2-compartment Harz jig with sieves having 4-millimeter round holes and plungers making 160 1.75-inch strokes per minute. Handles 200 tons of ore with 40 gallons of water in the feed and 62 gallons of hydraulic water. Requires 1.61 horse-power when empty, and, together with (18), (20), (26), (28), (30), and (32), 21.53 horse-power under normal load. The feed gives the following sizing test:

On	9	millimeters		52.99	percent.	On	40	mesh	0.24 percent.
"	6	"		38.87	"	"	80	"	0.18 "
"	4	"		6.20	"	"	100	"	0.06 "
"	2	"		0.53	"	"	150	"	0.02 "
"	20	mesh		0.31	"	Through	150	"	0.57 "

From (13); delivers the first side discharges and second hutch products,

2 — 30' — 16' — 26"
3 — 30' — 12' — 26"
4 — 16' — 16' — 26"

1-Frenier Sand Pump — 48" dia. 24 ft. lift.
1-Vanner — 190 R.P.M.
1-Wilfley table — 265 strokes per minute.

Morons
Three-phase alternating current — 60 cycles.

Place.	No.	Rated H.P.	Operating H.P.
Coarse breaking plant	1	50	33
Fine	1	50	40
Jigs, elevators, trommels and coarse rolls	1	85	50
Chilian mills & fine rolls	1	125	110
Tables & vanners	1	35	20
Compressors	1	15	12
Slime plant	2	4	3
Totals		364	268

Line Notation.

	Mill feed, original & secondary
———	Table middlings
——·——·——	" sands
——·——·——	" headwater
——·——·——	1st class concentrates
——·——·——	2nd class concentrates
——·——·——	Slimes
——·——·——	Tailings

FIG. 285.

LIBRARY OF THE UNIVERSITY OF

Run dr
and req
load. I
6. F
7 × 12
347 ton
under 1
7. C
a speed
power
delivers

This
are giv
8. S
9. I
see (2)
The

10.
5.0% o
11.
which
rejects
12.
7 × 14
560 tor
Togeth
power
13.
0.5625
which
while t
92 gall
with (1
horse-p
oversiz
14.
round
200 tor
water.
(20), (
gives t

Fr

amounting to 2 tons, as second-class concentrates, to (69); the first hutch products, as first-class concentrates, to (12); and the tailings to (15).

15. Shovel dewatering wheel, making 12 revolutions per minute, handling 264 tons of ore and 172 gallons of water. From (14) and (18); delivers ore to (16) and the overflow, containing 4 tons of ore with 90 gallons of water, to (50).

16. F. M. Davis rolls set to crush to 0.125 inch. Midvale steel shells weigh, when new, 5,772 pounds, last 178 days or while the mill handles 37,318 tons, and when worn out weigh 838 pounds. Latrobe steel shells weigh, when new, 9,012 pounds, last 185 days or while the mills handles 47,450 tons, and when worn out weigh 1,611 pounds. Steel cheek plates weigh, when new, 588 pounds, last 363 days or while the mill handles 84,768 tons, and when worn out weigh 380 pounds. Phosphor-bronze wearing parts weigh, when new, 510 pounds, last 363 days or while the mill handles 84,768 tons, and when worn out weigh 350 pounds. Run wet. Handle 260 tons of ore and 82 gallons of water and require 7.12 horse-power when empty and 14.37 horse-power under normal load. Other details as in (5). From (15); deliver crushed ore to (12).

17. Two trommels having 6-millimeter round holes punched, 0.375 inch between centers, in No. 10 steel. Each has a life of 340 days or while the mill handles 77,838 tons. Handle 360 tons of ore with 86 gallons of water in the feed and 34 gallons of hydraulic water. For power and other details see (13). From (13); deliver oversize, via mixing box, to (18) and undersize to (19).

18. One double 3-compartment Harz jig. The first and third sieves have 4-millimeter and the second 6-millimeter round holes. The plungers make 176 1.25-inch strokes per minute. Handles 134 tons of ore with 25 gallons of water in the feed and 116 gallons of hydraulic water. Together with (20) and (28) requires 2.32 horse-power when empty. For horse-power under normal load see (14). The feed gives the following sizing test:

On 6 millimeters	30.67 percent.		
" 4 "	56.50 "	On 80 mesh	0.09 percent.
" 2 "	8.70 "	" 100 "	0.02 "
" 20 mesh	1.02 "	" 150 "	0.00 "
" 40 "	2.44 "	Through 150 "	0.54 "

From (17); delivers the first side discharges, as first-class concentrates, to (68); the second and third hutch products, as second-class concentrates, to (69); the first hutch products, as first-class concentrates, to (26) and (28); and the tailings to (15) and (21). The products going to (68) and (69) amount to 2 tons.

19. Two trommels having 4-millimeter round holes punched, 0.25 inch between centers, in No. 12 steel. Each has a life of 334 days or while the mill handles 76,283 tons. Handle 226 tons of ore with 95 gallons of water in the feed and 34 gallons of hydraulic water. For power and other details see (13). From (17); deliver oversize, via two mixing boxes, to (20), and undersize to (27).

20. Two double 3-compartment Harz jigs. The first sieves have 6 mesh, 18 wire, the second and third 5-millimeter round holes. The plungers make 216 0.875-inch strokes per minute. Handle 76 tons of ore with 34 gallons of water in the feed and 148 gallons of hydraulic water. For power see (18). The feed gives the following sizing test:

On 4 millimeters	36.11 percent.		
" 2 "	55.17 "	On 80 mesh	0.43 percent.
" 20 mesh	5.58 "	" 100 "	0.07 "
" 40 "	2.01 "	" 150 "	0.03 "
		Through 150 "	0.69 "

From (19); deliver the first hutch products, as first-class concentrates,

to (30) and (68); the second and third hutch products, as second-class concentrates, to (69); and the tailings to (21). The products going to (68) and (69) amount to 6 tons.

21. Three shovel dewatering wheels, making 12 revolutions per minute, handling 440 tons of ore, with 252 gallons of water from jigs and 66 gallons from trommels. From (18), (20), and (24); deliver 431 tons of ore with 50 gallons of water to (22) and 9 tons of ore with 268 gallons of water to (45).

22. Three F. M. Davis rolls, 14 × 27 inches, making 105 revolutions per minute and set to crush to 0.0625 inch. Midvale steel shells for the 3 rolls weigh, when new, 11,190 pounds, last 322 days or while the mill handles 73,415 tons, and when worn out weigh 2,113 pounds. Steel cheek plates for the 3 rolls weigh, when new, 438 pounds, last 322 days or while the mill handles 73,415 tons, and when worn out weigh 288 pounds. Cast-brass wearing parts for the 3 rolls weigh, when new, 480 pounds, last 322 days or while the mill handles 73,415 tons, and when worn out weigh 288 pounds. Run wet. Handle 431 tons (127 tons from jigs and 304 tons of returns), with 50 gallons of water and require 16.10 horse-power when empty and 33.20 horse-power under normal load. From (21); deliver crushed ore to (23).

23. Bucket elevator having a speed of 350 feet per minute and elevating the ore 56 feet. Handles 431 tons of ore with 50 gallons of water. For power see (12). From (22); delivers to (24).

24. Two trommels having 2.5-millimeter round holes punched, 0.1875 inch between centers, in No. 16 steel. Each has a life of 402 days or while the mill handles 94,313 tons. Handle 431 tons of ore with 50 gallons of water in the feed and 34 gallons of hydraulic water. For power and other details see (13). From (23); deliver oversize to (21) and undersize to (25).

25. Two Richards' vortex hydraulic classifiers with two spigots each. For details see (29). From (24); deliver the first spigots to (26), the second spigots to (31), and the overflows to (44).

26. One double 4-compartment Harz jig. The first sieves have 10 mesh, 19 wire, the second and third 2.5-millimeter, and the fourth 2-millimeter round holes. The plungers make 242 0.5625-inch strokes per minute in the first, second, and third compartments, and 0.5-inch strokes in the fourth compartments. Together with (30) handles 138 tons of ore with 75 gallons of water in the feed and 150 gallons of hydraulic water. Together with (30) and (32) requires 9.84 horse-power when empty. For horse-power under normal load see (14). For a sizing test of the feed see (29). From (18) and (25); delivers the first hutch products, as first-class concentrates, to (68); the second, third, and fourth hutch products, as second-class concentrates, to (69); and the tailings to (33). The products going to (68) and (69) from (26) and (30) amount to 6 tons.

27. Two trommels having 2-millimeter round holes punched, 0.1563 inch between centers, in No. 18 steel. Each has a life of 393 days or while the mill handles 92,063 tons. Handle 150 tons of ore with 95 gallons of water in the feed and 34 gallons of hydraulic water. For power and other details see (13). From (19); deliver oversize to (28) and undersize to (29).

28. One double 3-compartment Harz jig. The first sieves have 8 mesh, 18 wire, the second and third 4-millimeter round holes. The plungers make 224 0.75-inch strokes per minute in the first and second compartments and 0.625-inch strokes in the third compartments. Handles 34 tons of ore with 26 gallons of water in the feed and 39 gallons of hydraulic water. For power see (18). The feed gives the following sizing test:

On 2 millimeters	41.15 percent.	On 100 mesh	0.17 percent.
" 20 mesh	47.16 "	" 150 "	0.01 "
" 40 "	9.25 "	Through 150 "	0.87 "
" 80 "	1.39 "		

From (18) and (27); delivers the first hutch products, as first-class concentrates, to (68); the second and third hutch products, as second-class concentrates, to (69); and the tailings to (33). For the amount going to (68) and (69) see (26).

29. Two Richards' vortex hydraulic classifiers with 2 spigots each. Together with (25) handle 243 tons of ore with 121 gallons of water in the feed and 175 gallons of hydraulic water. From (27); deliver the first spigots, via two mixing boxes, to (30); the second spigots to (31); the third spigots, amounting to 10 tons of ore and 21 gallons of water, to three tables in (49); and the overflows to (46). Together with (25) the first spigots contain 138 tons of ore and 75 gallons of water, the second spigots 18 tons of ore and 6 gallons of water, and the overflows 77 tons of ore and 194 gallons of water. The spigots give the following sizing tests:

	First Spigot. Percent.	Second Spigot. Percent.	Third Spigot. Percent.
On 20 mesh	46.34	3.34	.....
" 40 "	35.19	27.28	1.99
" 80 "	11.50	45.01	33.44
" 100 "	1.52	5.26	10.60
" 150 "	1.62	8.17	9.27
Through 150 "	3.83	10.94	44.70
Totals	100.00	100.00	100.00

30. Two double 2-compartment Harz jigs. The first sieves have 10 mesh, 19 wire, the second and third sieves 2.5-millimeter, and the fourth sieves 2-millimeter round holes. The plungers make 242 0.5625-inch strokes per minute in the first, second, and third compartments and 0.5-inch strokes in the fourth compartments. For details regarding capacities, water quantities, and power see (26). From (20) and (29); deliver the first hutch products, as first-class concentrates, to (68); the second, third, and fourth hutch products, as second-class concentrates, to (69); and the tailings to (33). For the amount of products going to (68) and (69) see (26).

31. One 1-spigot classifier. From (29); delivers spigot, via mixing box, to (32) and overflow to (37).

32. One double 4-compartment Harz jig with sieves of 12 mesh, 20 wire. The plungers make 256 0.375-inch strokes per minute in the first, second, and third compartments and 0.3125-inch strokes in the fourth compartments. Handles 18 tons of ore with 6 gallons of water in the feed and 47 gallons of hydraulic water. For power see (26). From (31); delivers all hutch products, amounting to 2 tons, as second-class concentrates, to (69) and the tailings to (43).

33. Chili mill feed settling-tank handling 164 tons of ore with 290 gallons of water. From (26), (28), and (30); delivers 150 tons of settlings with 68 gallons of water to (34) and the overflow with 14 tons of ore and 222 gallons of water to (37) and (38).

34. Two 6-foot Monadnock Chili mills with bottom drives, making 33 revolutions per minute. The Midvale steel ring dies are cemented into place with Portland cement, no lead or babbitt being used, and weigh, when new, 5,700 pounds, last 131 days or while the concentrator handles 29,740 tons, and when worn out weigh 980 pounds. The Midvale steel trunnion tires are held on the cores by hardwood wedges and weigh, when new, 7,968 pounds, last 131 days or while the concentrator handles 29,740 tons, and when worn out weigh 1,654 pounds. The steel wire screens vary from 9 to 20 mesh, 12 and 14 mesh being used for the greater part of the ore. They weigh, when new, 1,415 pounds, last 289 days or while the concentrator handles 64,654 tons, and when worn out weigh 1,186 pounds. Phosphor-bronze wearing parts

weigh, when new, 30 pounds, last 365 days or while the concentrator handles 84,363 tons, and when worn out weigh 10 pounds. Cast-iron plows weigh when new, 228 pounds, last 131 days or while the concentrator handles 29,74[illegible] tons, and when worn out weigh 90 pounds. Handle 150 tons of ore with 6[illegible] gallons of water and require 17.16 horse-power when empty and 54.98 horse-power under normal loads. From (33); deliver pulp to (35) and (39).

35. Two Richards' vortex hydraulic classifiers with 3 spigots each. Handle 133 tons of ore with 106 gallons of water in the feed and 73 gallons of hydraulic water. From (34), (37), and (43); deliver the first spigots, containing 58 tons of ore with 39 gallons of water, to two tables in (40); the second spigots, containing 32 tons of ore with 35 gallons of water, to two tables in (40); the third spigots, containing 21 tons of ore with 23 gallons of water, to two tables in (40); and the overflows, containing 22 tons of ore with 82 gallons of water, to (36). The spigot products give the following sizing tests:

	First Spigot. Percent.	Second Spigot. Percent.	Third Spigot. Percent.
On 20 mesh	0.49	.....	.....
" 40 "	39.35	19.84	0.86
" 80 "	33.93	47.26	30.91
" 100 "	4.92	12.26	15.19
" 150 "	5.41	5.18	12.83
Through 150 "	15.90	15.45	40.21
Totals	100.00	99.99	100.00

36. Round settling tank handling 22 tons of ore with 82 gallons of water. From (35); delivers spigot product, containing 10 tons of ore with 23 gallons of water, to one table in (40) and the overflow, containing 12 tons of ore with 59 gallons of water, to (52). The spigot product gives the following sizing test:

On 80 mesh	5.17 percent.	On 150 mesh	13.58 percent.
" 100 "	12.28 "	Through 150 "	68.97 "

37. Settling tank handling 10 tons of ore with 152 gallons of water. From (31) and (33); delivers spigot product, containing 8 tons of ore with 30 gallons of water, to (35), and overflow, containing 2 tons of ore with 122 gallons of water, to (50).

38. Settling tank handling 4 tons of ore with 70 gallons of water. From (33); delivers spigot product, containing 4 tons of ore with 15 gallons of water, to (39) and overflow, containing 55 gallons of clear water, to (67).

39. One Richards' vortex hydraulic classifier with 3 spigots handling 44 tons of ore with 37 gallons of water in the feed and 46 gallons of hydraulic water. From (34) and (38); delivers the first spigot product, containing 19 tons of ore with 23 gallons of water, to one table in (41); the second spigot product, containing 12 tons of ore with 13 gallons of water, to one table in (41); the third spigot product, containing 7 tons of ore with 10 gallons of water, to one table in (41); and the overflow, containing 6 tons of ore with 37 gallons of water, to (55). The spigot products give the following sizing tests:

	First Spigot. Percent.	Second Spigot. Percent.	Third Spigot. Percent.
On 20 mesh	3.17	.....	.....
" 40 "	44.44	11.99	.....
" 80 "	28.80	43.17	17.99
" 100 "	4.31	11.03	14.22
" 150 "	3.63	6.95	11.72
Through 150 "	15.65	26.86	56.07
Totals	100.00	100.00	100.00

40. Seven Wilfley tables making 246 to 260 throws per minute and, together with (41), (48), (49), (66), and (74), handling 196 tons of ore with 253 gallons of water in the feed and 97 gallons of hydraulic water. From (35) and (36); deliver concentrates, via launder, to (75), middlings to three tables in (42), tailings to (61), and head waters to (51).

41. Three Wilfley tables with details as in (40). From (39); deliver concentrates, via launder, to (75), middlings to two tables in (42), tailings to (61), and headwaters to (47).

42. Twelve Wilfley tables and one Card table. (Similar to a Wilfley.) Three of the Wilfleys make 245, two make 250, seven make 260, and the Card makes 260 throws per minute. Handle 63 tons of ore with 124 gallons of water in the feed and 70 gallons of hydraulic water. Require 2.33 horse-power when empty and, together with (48), (49), (60), and (66), 4.29 horse-power under normal load. From (40), (41), (47), (48), (55), and (58); deliver concentrates, via launder, to (75), tailings to (61), and headwaters to (63).

43. Conical cast-iron settling-tank handling 21 tons of ore with 71 gallons of water. From (32) and (45); delivers spigot product, containing 15 tons of ore with 30 gallons of water, to (35) and the overflow, containing 6 tons of ore with 41 gallons of water, to (52).

44. Conical cast-iron settling-tank handling 37 tons of ore with 90 gallons of water. From (25); delivers spigot product, containing 10 tons of ore with 15 gallons of water, to one table in (49) and the overflow, containing 27 tons of ore with 75 gallons of water, to (52). The spigot product gives the following sizing test:

On 40 mesh.....	1.69 percent.	On 150 mesh.....	13.50 percent.
" 80 "	21.10 "	Through 150 "	51.90 "
" 100 "	11.81 "		

45. Two conical cast-iron settling-tanks handling 9 tons of ore with 268 gallons of water. From (21); deliver the spigot products, containing 5 tons of ore with 18 gallons of water, to (43) and the overflows, containing 4 tons of ore with 250 gallons of water, to (50).

46. Conical cast-iron settling-tank handling 40 tons of ore with 104 gallons of water. From (29); delivers spigot product, containing 12 tons of ore with 20 gallons of water, to (48) and the overflow, containing 28 tons of ore with 84 gallons of water, to (55). The spigot product gives the following sizing test:

On 80 mesh.....	21.70 percent.	On 150 mesh.....	13.21 percent.
" 100 "	15.57 "	Through 150 "	49.53 "

47. Conical cast-iron settling tank handling 3 tons of ore with 45 gallons of water. From (41); delivers spigot product, containing 3 tons of ore with 16 gallons of water, to four tables in (42), and the overflow, containing 29 gallons of clear water, to (67). The spigot product gives the following sizing test:

On 150 mesh.....	0.61 percent.
Through 150 mesh.	99.39 percent.

48. Two Wilfley tables making 256 throws per minute. For capacity see (40). Together with (49) and (66) require 0.81 horse-power when empty and for power under normal load see (42). From (46); deliver concentrates, via launder, to (75), middlings to one table in (42), and tailings to (61).

49. Four Wilfley tables with details as in (48). For capacity and power see (48). From (29) and (44); deliver concentrates, via launder, to (75), middlings to (58), tailings to (61), and head waters to (52).

50. Settling tank handling 10 tons of ore with 462 gallons of water.

From (15), (37), and (45); delivers spigot product, containing 8 tons of ore with 25 gallons of water, to (58) and the overflow, containing 2 tons of ore with 437 gallons of water, to (67).

51. Settling tank handling 10 tons of ore with 46 gallons of water. From (40); delivers spigot product, containing 6 tons of ore with 18 gallons of water, to (58) and the overflow, containing 4 tons of ore with 28 gallons of water, to (71).

52. Spitzkasten handling 54 tons of ore with 216 gallons of water. From (36), (43), (44), (49), (65), and (66); delivers spigot product, containing 10 tons of ore with 35 gallons of water, to (58) and the overflow, containing 44 tons of ore with 181 gallons of water, to (53) and (54).

53. Spitzkasten handling 22 tons of ore with 95 gallons of water. From (52); delivers spigot product, containing 7 tons of ore (all through 150 mesh) with 14 gallons of water, to two vanners in (60) and the overflow, containing 15 tons of ore with 81 gallons of water, to (59).

54. Spitzkasten handling 22 tons of ore with 86 gallons of water. From (52); delivers spigot product, containing 7 tons of ore (all through 150 mesh) with 8 gallons of water, to one vanner in (60) and the overflow, containing 15 tons of ore with 78 gallons of water, to (59).

55. Spitzkasten handling 34 tons of ore with 121 gallons of water. From (39) and (46); delivers spigot product, containing 6 tons of ore with 15 gallons of water, to four tables in (42) and the overflow, containing 28 tons of ore with 106 gallons of water, to (56) and (57). The spigot product gives the following sizing test:

On 100 mesh	1.06 percent.
" 150 "	9.57 "
Through 150 "	89.37 "

56. Spitzkasten handling 14 tons of ore with 53 gallons of water. From (55); delivers spigot product, containing 4 tons of ore with 13 gallons of water, to two vanners in (60) and the overflow, containing 10 tons of ore with 40 gallons of water, to (63). The spigot product gives the following sizing test:

On 150 mesh.....0.83 percent. Through 150 mesh.....99.17 percent.

57. Spitzkasten handling 14 tons of ore with 53 gallons of water. From (55); delivers spigot product, containing 5 tons of ore with 13 gallons of water, to two vanners in (60) and the overflow, containing 9 tons of ore with 40 gallons of water, to (71). The spigot product gives the following sizing test:

On 150 mesh.....0.54 percent. Through 150 mesh.....99.46 percent.

58. One Richards' vortex hydraulic classifier with 4 spigots handling 30 tons of ore with 90 gallons of water. From (49), (50), (51), and (52); delivers the first spigot, containing 11 tons of ore with 28 gallons of water, the second spigot, containing 5 tons of ore with 15 gallons of water, and the third spigot, containing 4 tons of ore with 13 gallons of water, to four tables in (42); the fourth spigot, containing 2 tons of ore with 8 gallons of water, to one vanner in (60); and the overflow, containing 8 tons of ore with 26 gallons of water, to (59). The spigot products give the following sizing tests:

	First Spigot. Percent.	Second Spigot. Percent.	Third Spigot. Percent.	Fourth Spigot. Percent.
On 80 mesh	25.00	12.31	.....	.....
" 100 "	7.35	4.61	4.65	.....
" 150 "	57.35	10.77	6.98	4.55
Through 150 "	10.30	72.31	88.37	95.45
Totals	100.00	100.00	100.00	100.00

59. Canvas feed settling-cone handling 38 tons of ore with 185 gallons of water. From (53), (54), and (58); delivers spigot product, containing 26 tons of ore with 108 gallons of water, to (62) and overflow, containing 12 tons of ore with 77 gallons of water, to (63).

60. Eight 6-foot vanners making 182 thrusts per minute, handling 25 tons of ore with 56 gallons of water in the feed and 12 gallons of hydraulic water. Five of them require 0.79 horse-power when empty. For power under normal load see (42). From (53), (54), (56,) (57), and (58); deliver concentrates, via launder, to (75) and tailings to (63).

61. Eighteen canvas tables, 11.5 feet wide by 12 feet long, made of 18-ounce duck and having slopes of 3 inches to the foot. Together with (62) and (63) handle 230 tons of ore with 413 gallons of water in the feed and 20 gallons of hydraulic water. From (40), (41), (42), (48), (49), and (66); deliver second-class concentrates to (64) and tailings to (67).

62. Sixteen canvas tables, 11.5 feet wide by 17 feet long, made of 18-ounce duck and having slopes of 1.75 inches to the foot. For capacity see (61). From (59); deliver second-class concentrates to (64) and tailings to (67).

63. Thirty-four canvas tables. Eighteen are 17 feet long and 16 are 19 feet long. All are 11.5 feet wide. Made of 18-ounce duck and having slopes of 1 inch to the foot. For capacity see (61). From (42), (56), (59), and (60); deliver second-class concentrates to (64) and tailings to (67).

64. One Latta and Martin pneumatic displacement pump handling 5 tons of ore with 37 gallons of water per minute against a head of 76 feet. From (61), (62), and (63); delivers to (65).

65. Two canvas redress settling-cones arranged in series. The first handles 5 tons of ore with 37 gallons of water . From (64); delivers the spigot product, containing 1 ton of ore with 15 gallons of water, to (66) and the overflow, containing 4 tons of ore with 22 gallons of water, to the second. The second delivers the spigot product, containing 3 tons of ore with 12 gallons of water, to (66) and the overflow, containing 1 ton of ore with 10 gallons of water, to (52). The spigot products give the following sizing tests:

	First Spigot. Percent.	Second Spigot. Percent.
On 80 mesh	9.52	.....
" 100 "	4.76	0.40
" 150 "	11.91	0.80
Through 150 "	73.81	98.80
Totals	100.00	100.00

66. Two Wilfley tables making 264 throws per minute. Only one used. For capacity see (40). For power see (48). From (65); deliver concentrates, via launder, to (75); middlings to (52); tailings to (61); and headwaters to (52).

67. Tailings automatic sampler. From (38), (47), (50), (61), (62), and (63); delivers sample to assayer and reject, via tailings launder, to waste dump.

68. Eight first-class concentrates bins each having a capacity of 24 tons. Together with (69), (70), and (75) handle 60 tons of concentrates with 50 gallons of water and 40 gallons of wash water. From (18), (20), (26), (28), and (30); deliver concentrates, via cars, to smelter and drainings to (70).

69. Twelve second-class concentrates bins each having a capacity of 42 tons. For amount handled see (68). From (14), (18), (20), (26), (28), (30), and (32); deliver concentrates, via cars, to smelter and drainings to (70).

70. Eight settling tanks, four of 12 tons' capacity each and four of 18 tons,

capacity each. Steam coils in bottoms. For amount handled see (68). From (68) and (69); deliver dry concentrates, via cars, to smelter and overflows, via launder, to waste.

71. Four slimes settling-tanks with steam coils in the bottoms. One is 35 feet long by 14 feet wide by 26 feet deep, another is 30 × 16 × 26 feet, another is 30 × 12 × 26 feet, and the fourth is 16 × 16 × 26 feet. Handle 13 tons of ore with 68 gallons of water in the feed and 25 gallons of hydraulic water. From (51) and (57); deliver settlings to (72) and overflows, via launder, to waste.

72. One 4-foot Frenier sand pump lifting against a head of 24 feet. From (71); delivers to (73) and (74).

73. One vanner making 190 throws per minute. From (72); delivers concentrates, via launder, to (75) and tailings, via launder, to waste.

74. One Wilfley table making 265 throws per minute. For capacity see (40). From (72); delivers concentrates, via launder, to (75) and tailings, via launder, to waste.

75. Bins for table and vanner concentrates. For amount handled see (68). From (40), (41), (42), (48), (49), (60), (66), (73), and (74); deliver concentrates, via cars, to smelter.

The mill concentrates about 4.5 tons into 1 and saves 88% of the gold, 79% of the silver, 84% of the lead, and 79% of the copper.

Of the total ore milled 215.67% passes to (4), 188.0% to (13), 120.0% to (17), 75.33% to (19), 143.67% to (24), and 50.0% to (27).

Of the total ore milled 115.67% passes to (5), 86.67% to (16), 48.0% to (22), and 50.0% to (34).

Power and Water.

Only General Electric induction motors are used. All are type-I, 3-phase, 60-cycle machines using an alternating current.

The following list shows a summary of the same:

Motor Operating.	Number.	Form.	Amperes.	Volts.	Revolutions per Minute.	Horse-power.	
						Rated.	Operating.
(2), (3), and (9)	1	L.	125.0	220	720	50	28.25
(4), (5), (6), and (7)	1	K.	125.0	220	900	50	34.17
(12), (13), (14), (16), (17), (18), (19), (20), (23), (24), (26), (27), (28), (30), and (32)	1	L.	22.8	2,080	720	85	61.69
(22) and (34)	1	K.	33.5	2,080	900	125	92.50
(42) (48), (49), (60), and (66)	1	L.	87.5	220	600	35	30.67
Compressors	1	C.	37.5	220	900	15	17.43
Slimes plant	2	.....	.....	.....	.....	4	2.00
Totals	8	.....	.....	.....	.....	364	266.51

The following table gives a summary of the water used in gallons per minute:

Original feed water (12)	10
Trommels (13), (17), (19), (24), and (27)	170
Jig (14)	62
" (18)	116
Jigs (20)	148
" (26) and (30)	150
" (28)	39
Jig (32)	47
Hydraulic classifiers (25) and (29)	175
" " (35) " (39)	119
Tables (40), (41), (42), (48), (49), (66), and (74)	167
Vanners (60)	12
Wash water for canvas tables (61), (62), and (63)	20
" " " concentrates (68)	40
" " " slimes plant and miscellaneous (71)	25
Total	1,300

§ 658. MILLS MINING AND REDUCTION COMPANY, HAZEL GREEN, WISCONSIN. — This plant has a capacity of about 200 tons per 10 hours and is shown diagrammatically in Fig. 286. The ore consists of the economic minerals galena, marcasite, and sphalerite in a limestone gangue, and the run of mine ore assays about as follows: 1% in lead, 9.5% in iron, and 9% in zinc.

The problem is to save the lead, iron, and zinc values. The Trego roaster and Waring magnetic separators which were installed did not serve the purpose intended and have been replaced by a Howell-White type of roaster and Cleveland-Knowles magnetic separators. The method of ore dressing in use in this mill is not typical Wisconsin practice, but such a modification of the Joplin practice as the exigencies of the situation have demanded.

Ore from the mine goes to (1).

1. Grizzly, 7 feet long, with bars of 3-inch shafting set 4.5 inches apart and having a 16° slope. From the mine and (2); delivers oversize to (2) and undersize to (3).

2. Spaller. From (1); delivers waste rock to dump and ore, broken to pieces smaller than 4.5 inches, to (1).

3. Hopper built of 2-inch oak plank and covered with 0.5-inch boiler iron. Capacity 400 tons. Supported with 10 × 10-inch timbers and tied with 1-inch iron rods and cast-iron washers. From (1); delivers to (4).

4. Sixteen-inch Blake-type breaker making 275 thrusts per minute and having a capacity of 20 tons per hour. From (3); delivers crushed ore to (5).

5. Rolls, 14 × 30 inches, making 22 revolutions per minute. Handle about 16 tons per hour. The shells are from the Joplin Foundry Company and have been in service over a year with no appreciable wear. From (4); deliver crushed ore to (6).

6. Twenty-inch elevator with a 10-ply belt, made of alternate layers of duck and rubber, having a speed of 300 feet per minute, and buckets, set 18 inches apart, elevating the ore 24 feet. From (5), (8), and (13); delivers to (7).

7. Trommel of 0.1875-inch steel plate punched with 0.5-inch holes, having a speed of 20 revolutions per minute, a slope of 8°, and a capacity of 20 tons per hour. From (6); delivers oversize to (8) and undersize to (9).

8. Rolls, 14 × 24 inches, making 25 revolutions per minute, having a capacity of 10 tons per hour, and other details as in (5). From (7); deliver crushed ore to (6).

9. One 7-compartment roughing jig with screens, 32 × 48 inches, made of wrought-iron plate punched with 0.1875-inch holes. Wire-cloth screens clog so badly that they could not be used. Even with punched-plate screens 2 hours a day are required to clean them. This is done by beating the screen with a piece of old rubber belting attached to a wooden handle. The screens wear about 6 months and it is the beating that destroys them. The plungers make 140 strokes per minute. The products are discharged from screens and hutches by means of Perfection gates. Requires 5 horse-power and 8 tons of water per ton of ore treated. From (7); delivers clean galena to (11), rough sphalerite concentrates to (11), and tailings to (10).

10. Eighteen-inch elevator with an 8-ply belt, a lift of 60 feet, and other details as in (6). From (9) and (14); delivers to tailings dump.

11. Ten-inch elevator with a 6-ply belt having buckets set 2 feet apart and other details as in (6). From (9); delivers to (12).

12. Trommel with 0.375-inch round punched holes and other details as in (7). From (11); delivers oversize to (13) and undersize to (14).

13. Rolls, 14 × 24 inches, having a capacity of 2 tons per hour and other details as in (8). From (12), (15), and (21); deliver crushed ore to (6).

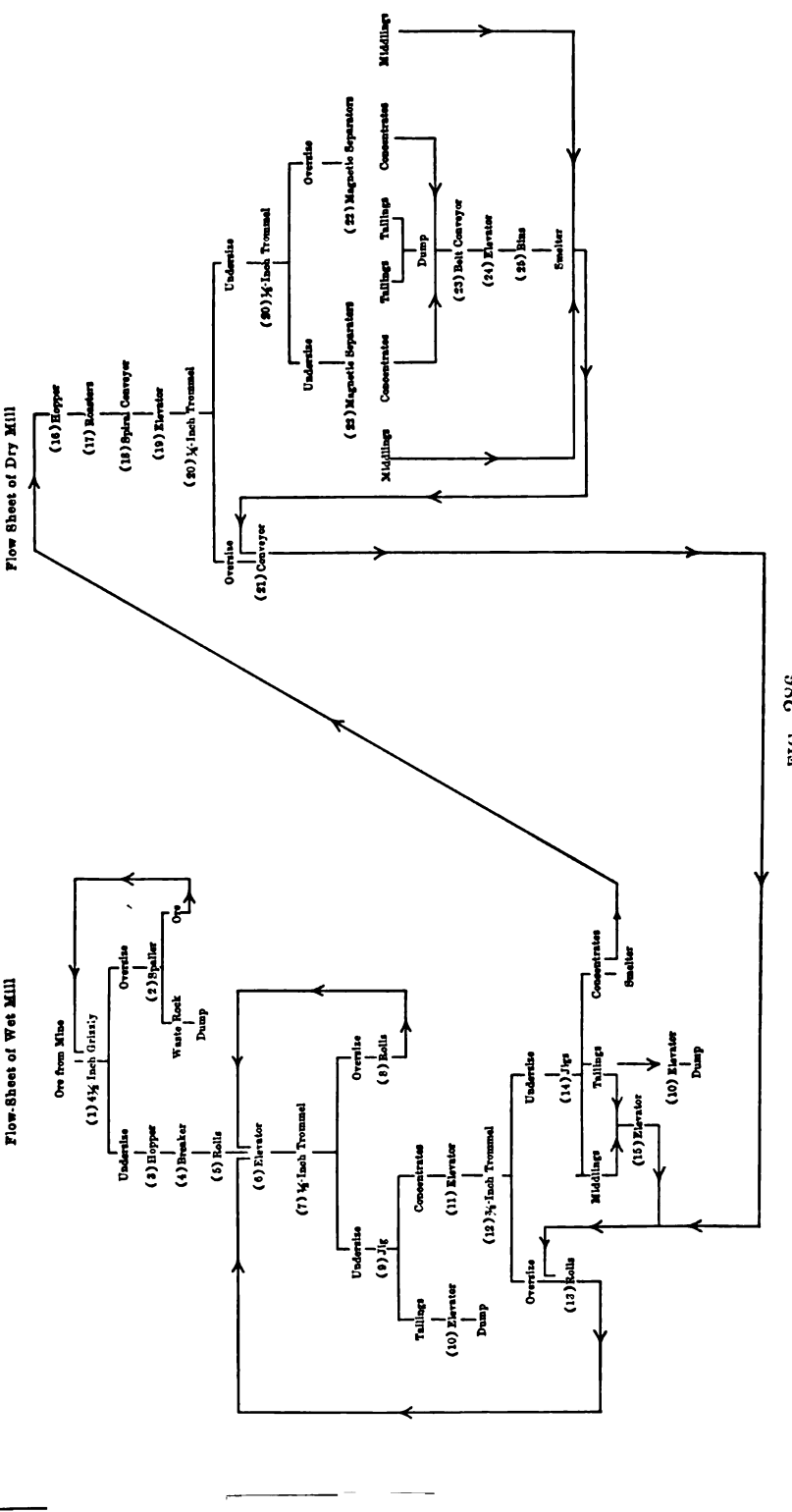
Flow-Sheet of Wet Mill
Ore from Mine
(1) 4½ Inch Grizzly
Oversize
(2) Speller
Ore
Waste Rock
Dump
Undersize
(3) Hopper
(4) Breaker
(5) Rolls
(6) Elevator
(7) ¼ Inch Trommel
Oversize
(8) Rolls
Undersize
(9) Jig
Concentrates
(11) Elevator
(12) ¾ Inch Trommel
Tailings
(10) Elevator
Dump
Oversize
(13) Rolls
Undersize
(14) Jigs
Concentrates
Smelter
Tailings
(10) Elevator
Dump
Middlings
(15) Elevator
Flow Sheet of Dry Mill
(16) Hopper
(17) Rinders
(18) Spiral Conveyor
(19) Elevator
(20) ¼ Inch Trommel
Undersize
(30) ¼ Inch Trommel
Oversize
(22) Magnetic Separators
Undersize
(23) Magnetic Separators
Middlings
Concentrates
Tailings
Dump
Tailings
Concentrates
(23) Belt Conveyor
(24) Elevator
(25) Bins
Smelter
Middlings
Oversize
(21) Conveyor

FIG. 286.

14. Two 7-compartment cleaner jigs with screens, 28 × 42 inches. The plungers make 160 strokes per minute and all other details are as in (7). Require 5 horse-power each. From (12); deliver finished galena, via cars, to smelter, middlings to (15), finished sphalerite concentrates to (16), and tailings to either (10) or (15).

15. Elevator. From (14); delivers to (13).

Roasting and Magnetic Separating Department.

The material handled here consists of nearly equal parts of sphalerite and marcasite and assays about 0.5% in lead, 30% in zinc, 25% in iron, and 1.8% in calcium carbonate.

16. Elevated hopper of 100 tons' capacity. From (14); delivers to (17).

17. Two Mathey cylindrical roasters which are a slight modification of the Howell-White furnace. Each has a capacity of 25 tons per 10 hours. From (16); deliver roasted ore to (18).

18. Spiral conveyor. From (17); delivers to (19).

19. Elevator. From (18); delivers to (20).

20. Concentric trommel with 0.25 and 0.125-inch holes in the screens. From (19); delivers the oversize to (21) and the two undersizes to separate machines in (22).

21. Conveyor. From (20) and (22); delivers to (13).

22. Three Cleveland-Knowles magnetic separators which are suited for lifting strongly magnetic material. From (20); deliver clean sphalerite concentrators to (23), middlings to (21), and tailings to tailings dump.

23. Belt conveyor. From (22); delivers to (24).

24. Elevator. From (23); delivers to (25).

25. Shipping bins for sphalerite. From (24); delivers, via cars, to smelter.

The galena concentrates assay about 80% in lead.

In the sphalerite concentrates lead is penalized $1 a unit when in excess of 1%, and lime $0.50 a unit when in excess of 2.5%.

Two hundred tons of crude ore are mined in one shift of 9 hours and milled in one shift of 10 hours. Both are operated but 6 days a week.

Labor and Wages.

The mill force is as follows:

1 mill man at	$21.00	per week	$21.00
2 mill helpers at	12.00	" "	24.00
2 grizzly tenders at	12.00	" "	24.00
1 breaker feeder at	12.00	" "	12.00
6 men	at $13.50		$81.00

Blacksmiths are paid $15 per week, engineeers $15, firemen $15, carpenters $12, pump men $15, and laborers $9.

Power and Water.

The power plant consists of 3 boilers aggregating 500 horse-power and divided up as follows:

One 125 horse-power Atlas high-pressure boiler.
" 125 " " Brownell high-pressure boiler.
" 250 " " Bonson combination boiler.

The mill power is furnished by a 90 horse-power Atlas engine, 14 × 20 inches. A 35 horse-power Atlas automatic high-speed engine, 10 × 16 inches, runs a "Northern" dynamo of 30 kilowatts' capacity which furnishes electricity

for lighting the mine and mill and for exciting the magnets in the separators. Sixty horse-power is required in running the 3 hoists, 50 horse-power for the compressor, 50 horse-power for the ground pumps, and 15 horse-power for the deep-well pump. A total, therefore, of about 300 horse-power is required to run the whole plant. A Sorge-Cochran purifying and heating system is used.

Approximately 8 tons of water are required in the mill per ton of ore treated. Six hundred gallons per minute is the amount of water required and one-half of this comes direct from the mines. The remainder is secured by having a settling pond and re-using the water. The boilers require 3,000 gallons per 24 hours. This, as well as water for drinking and camp purposes, is furnished by a deep well, sunk 432 feet down to the St. Peters sandstone.

Costs.

The milling costs per ton of mill ore are divided as follows:

Labor	$0.0650
Power (90 horse-power)	0.1350
Supplies	0.0500
Supervision and incidentals	0.0250
Total	$0.2750

Costs would be lower but for the inferior labor market and high cost of fuel. Inferior Illinois coal costs $3.40 per ton and a really good steaming coal costs $4.85 per ton f.o.b. the mine.

§ 659. WITHERBEE, SHERMAN, AND COMPANY INC., MINEVILLE, ESSEX COUNTY, NEW YORK. — This company operates two mills for the magnetic concentration of iron ore, called No. 1 and No. 2 Mills respectively, see Figs. 288 and 289, and is given to illustrate the Eastern iron-ore practice.

No. 1 Mill treats 700 tons in 10 hours, of the ore from the "Harmony" mines hoisted through "A" shaft and "B" shaft. The mill feed averages 52% in iron and 0.3% in phosphorus. When the demand for ore crowds No. 1 Mill to its capacity, the ore from "B" shaft is broken at the shaft house and a first separation made there, at the "Cobbing Plant" described below (Fig. 287). When the "Cobbing Plant" is in operation, from one-third to one-half of the "B" shaft ore is shipped as "Harmony cobbed."

No. 2 mill treats 800 tons in 10 hours, of the ore from the "Old Bed" Mine, "Joker," and "Bonanza" shafts, and also some of the ore from the "Smith" mine. The mill feed averages 57% in iron and 1.5% in phosphorus.

The economic minerals are magnetite and apatite. The magnetite is mined from the gneiss formation and apatite constitutes a large part of the gangue, the remainder being silica, feldspar, and hornblende. Besides those already mentioned, there are about 27 other minerals to be found in the mines.

No. 1 Mill is the older and many changes have been made in it since first built. The arrangement is not ideal, still, as at present laid out, it is very flexible to adjust to varying conditions.

The problem of separating the phosphorus from the iron ore requires the elimination of the apatite or phosphorus-bearing gangue which, being practically non-magnetic, determines the method of treatment required.

Cobbing Plant (*Fig.* 287).

This is located at "B" shaft. When the magnetite of the crude ore is in the form of large crystalline fragments, which break free from the rock, it can be readily handled by cobbing and a shipping product obtained carrying lumps up to 2.5 inches in size and running, on an average, 62% in iron and 0.15% in phosphorus. From the mine skips the ore goes to (1).

1. Grizzly with 1.5-inch spaces between the bars. From the mine; delivers oversize to (2) and undersize to (3).

2. Blake breaker, with an 18 × 30-inch jaw opening, breaking to 2.5 inches. Weighs 29 tons and is driven by a 100 horse-power General Electric motor, form 17, class 6-100-500, with form "T" controller and operating at 440 volts. From (1); delivers broken ore to (3).

3. Twenty-inch Robins belt conveyor which is head driven and has a slope of 15°. From (1) and (2); delivers to (4).

4. Bin, situated over (5). From (3); delivers to (5).

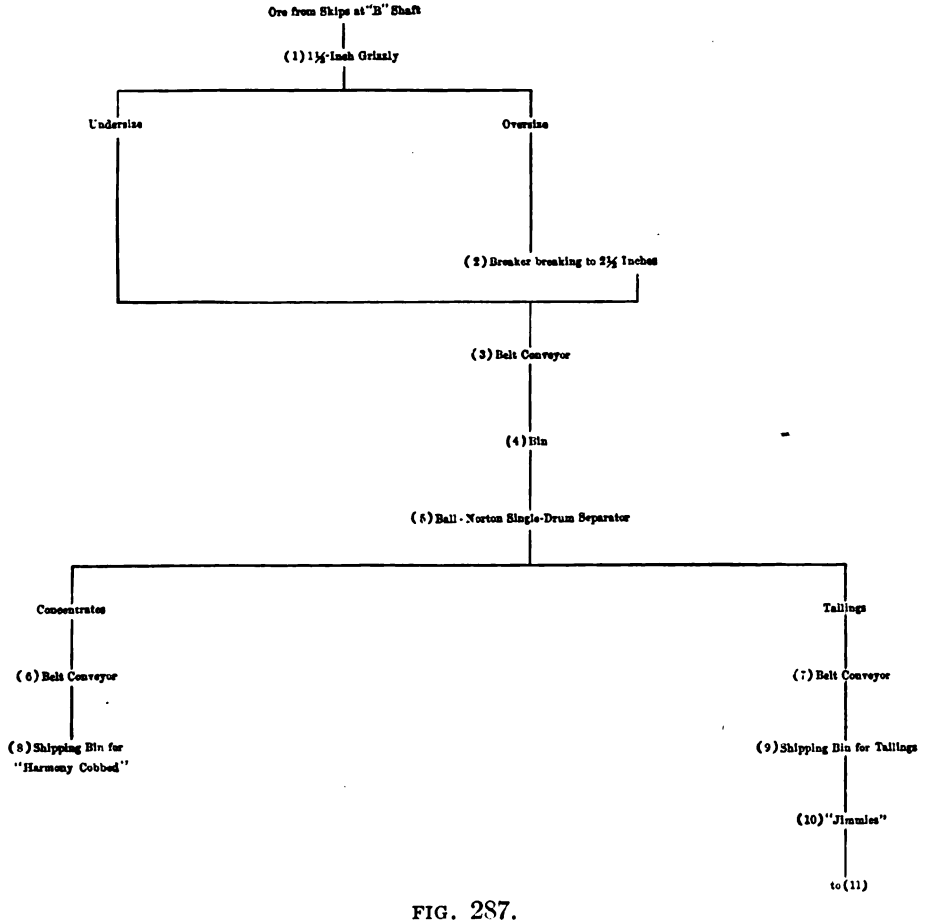

FIG. 287.

5. One Ball and Norton single-drum magnetic separator, designed for strongly magnetic minerals, containing 16 poles carrying 400 turns of No. 11 wire. Uses 7.5 amperes at 110 volts. A 30-inch brass drum, with an 18-inch face, revolves about the poles. From (4); delivers concentrates to (6) and tailings to (7).

6. Twenty-inch Robins belt conveyor which is head driven and has a slope of 18°. From (5); delivers to (8).

7. Twenty-inch Robins belt conveyor with details as in (6) and running parallel to (6) with a walk between. From (5); delivers to (9).

8. Concentrates bins for "Harmony cobbed." From (6); deliver, via standard gauge railroad cars and scales, to furnaces.

9. Tailings bins. From (7); deliver to (10).

10. Standard-gauge steel hopper-bottomed cars called "jimmies." From (9); deliver, via scales, to (11).

Mill No. 1 (*Fig.* 288).

11. Bin. From the "A" and "B" shafts and (10); delivers, via chute to (12).

12. Blake breaker, with an 18 × 30-inch jaw opening, breaking to 3 inches and making 234 thrusts per minute. Weighs 29 tons. From (11); delivers crushed ore to (13).

13. Twenty-inch Robins belt conveyor with a slope of 15°. From (12) delivers to (14).

14. Grizzly, 2 × 4 feet, with 2-inch spaces between the 1.5-inch bars which are set at an angle of 38°. From (13); delivers oversize to (15) and undersize, via chute, to (18).

15. Screens, 1.5 × 4 feet × 0.75 inch thick, of manganese-steel plates with 0.75 × 1.25-inch holes. From (14); deliver oversize to (16) and undersize to (17).

16. Three Gates breakers. One style, "D," No. 3, making 370 revolutions per minute and two, style "H," No. 5, making 570 revolutions per minute. Both break to 1.5 inches. From (15); deliver crushed ore to (17).

17. Twenty-inch Robins belt conveyor. From (15), (16), and (18) delivers to (20).

18. One Ball and Norton single-drum magnetic separator. From (14) delivers concentrates, via chute, to (19) and tailings, via chute, to (17).

19. Twenty-inch Robins belt conveyor. Head driven. From (18) delivers, via chute, to (43).

20. Twenty-inch Robins belt conveyor. From (17); delivers to (21).

21. Twenty-inch Robins belt conveyor. From (20); delivers to (22).

22. Drier which is a vertical shaft in two compartments, the drier and the chimney connected by two openings. The chimney has a damper on the top which is opened if the ore gets too hot. The drier stack is 4.75 feet square inside, filled with cast-iron tees, 5 inches wide on the top face with a shallow stem, for stiffness. They are placed 4 inches apart and the rows are 6 inches apart vertically. The bars are staggered, each row coming below the openings between the bars above. Every 6 rows are placed at right angles to the 6 above and below. The ore piles up on the bars until it rolls off and it then falls to the next in a zigzag motion through the hot gases ascending from the furnace. The furnace has a 6-foot square grate surface and is built on the side with a bridge wall between it and the drier. From (21); delivers dried ore, via chute, to (23).

23. Sixteen-inch elevator with a 10-ply cotton belt, a speed of 275 feet per minute, and steel buckets, 7 × 8 × 12 inches, elevating the ore 32 feet. Head driven, the head pulley being 2.5 feet in diameter. From (22); delivers, via chute, to (24).

24. One Ball and Norton single-drum magnetic separator. From (23); delivers concentrates to (43) and tailings, via chute, to (25).

25. Anaconda rolls, 15 × 40 inches, with chrome-steel shells and making 54 revolutions per minute. From (24); deliver crushed ore to (26).

26. Sixteen-inch elevator with a 10-ply cotton belt and steel buckets, 7 × 8 × 12 inches, set 18 inches apart, and elevating the ore 60 feet. From (25) and (30); delivers to (27).

27. Tower screens with 1.5 × 2-foot plates of Hendrick steel, 0.1875 inch

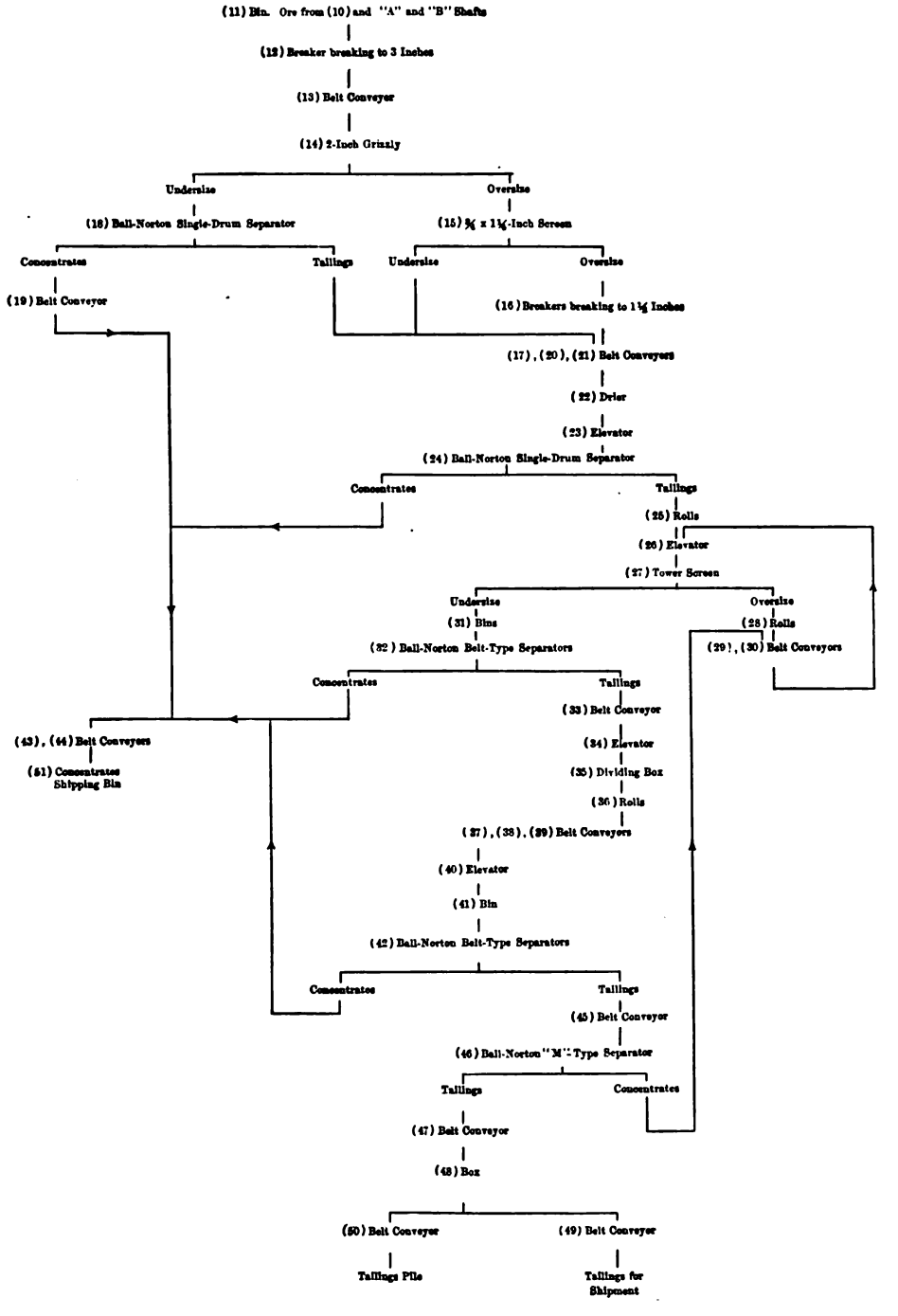
(11) Bin. Ore from (10) and "A" and "B" Shafts
(12) Breaker breaking to 3 Inches
(13) Belt Conveyer
(14) 2-Inch Grizzly
Undersize
Oversize
(18) Ball-Norton Single-Drum Separator
(15) ⅝ x 1¼-Inch Screen
Concentrates
Tailings
Undersize
Oversize
(19) Belt Conveyor
(16) Breakers breaking to 1¼ Inches
(17), (20), (21) Belt Conveyers
(22) Drier
(23) Elevator
(24) Ball-Norton Single-Drum Separator
Concentrates
Tailings
(25) Rolls
(26) Elevator
(27) Tower Screen
Undersize
Oversize
(31) Bins
(28) Rolls
(32) Ball-Norton Belt-Type Separators
(29), (30) Belt Conveyers
Concentrates
Tailings
(33) Belt Conveyor
(43), (44) Belt Conveyers
(34) Elevator
(51) Concentrates Shipping Bin
(35) Dividing Box
(36) Rolls
(37), (38), (39) Belt Conveyers
(40) Elevator
(41) Bin
(42) Ball-Norton Belt-Type Separators
Concentrates
Tailings
(45) Belt Conveyor
(46) Ball-Norton "M"-Type Separator
Tailings
Concentrates
(47) Belt Conveyor
(48) Box
(50) Belt Conveyer
(49) Belt Conveyor
Tailings Pile
Tailings for Shipment

FIG. 288.

thick with 0.25 × 0.5-inch openings. The plates are set at an angle of 38° and have a total area of 276 square feet. From (26); deliver oversize, via chutes, to (28) and undersize, via two chutes, to (31).

28. Anaconda rolls, 15 × 40 inches, making 54 revolutions per minute. From (27); deliver crushed ore to (29).

29. Twenty-inch Robins belt conveyor. From (28); delivers to (30).

30. Sixteen-inch Robins belt conveyor. From (29) and (46); delivers to (2[illegible]).

31. Two bins. From (27); deliver to (32).

32. Two Ball and Norton belt-type magnetic separators. Used for strongly magnetic minerals. From (31); deliver concentrates to (43) and tailings, via two chutes, to (33).

33. Sixteen-inch Robins belt conveyor. From (32); delivers to (34).

34. Fourteen-inch elevator which elevates the ore 32 feet. From (33), delivers to (35).

35. Dividing box. From (34); delivers, via two chutes, to (36).

36. Two Reliance rolls, 14 × 36 inches, with Latrobe steel shells, and making 88 revolutions per minute. From (35); deliver crushed ore to (37).

37. Two 16-inch Robins belt conveyors. From (36); deliver to (38).

38. Sixteen-inch Robins belt conveyor. From (37); delivers to (39).

39. Sixteen-inch Robins belt conveyor. From (38); delivers to (40).

40. Twelve-inch elevator, with an 8-ply cotton belt and steel buckets, 6 × 6 × 8 inches, elevating the ore 18.5 feet. From (39); delivers, via chute, to (41).

41. Bin. From (40); delivers, via two chutes, to (42).

42. Two Ball and Norton belt-type magnetic separators. From (41); deliver concentrates to (43) and tailings to (45).

43. Twenty-inch belt conveyor. Head driven. From (19), (24), (32), and (42); delivers to (44).

44. Sixteen-inch Robins belt conveyor. From (43); delivers to (51).

45. Sixteen-inch Robins belt conveyor. From (42); delivers to (46).

46. One Ball and Norton "M" type magnetic separator which has magnets of high flux density to pick up particles of gangue carrying magnetite which the previous belt-type machines have discarded. From (45); delivers concentrates to (30) and tailings to (47).

47. Sixteen-inch Robins belt conveyor. From (46); delivers to (48).

48. Box. From (47); delivers, via chutes, to either (49) or (50).

49. Sixteen-inch Robins belt conveyor. From (48); delivers tailings for shipment.

50. Sixteen-inch Robins belt conveyor. Head driven. From (48); delivers tailings to the tailings pile.

51. Concentrates shipping bin. From (44); delivers to furnaces.

The concentrated iron ore will run about 62% in iron and 0.15% in phosphorus and represents about 80% of the material treated. Nearly 65% of the concentrates are coarser than 20 mesh. The tailings will run about 9% in iron and represent about 20% of the crude ore. These tailings are used for the manufacture of concrete blocks, for which purpose a Hercules cement stone machine is installed. Concrete, made from these tailings, is one-tenth stronger than when sand is used.

The concentrates can be kept at any desired analysis, from 58 to 65% in iron, by simply adjusting the current carried by the separators and using the proper size screen openings. By changing the screens so that the ore is ground finer, the concentrates can be re-run and the iron concentrates raised to 71% in iron. This has been done on several carloads needed for special purposes.

During April, 1908, this mill treated 13,245 tons of crude ore. It operates

one 10-hour shift per day for 6 days a week and employs 18 men. In the same month the mill was running 212 hours. It was idle 25 hours for repairs, 14 hours because of no ore, and 1 hour because of no power.

Power.

The total power used in April, 1908, was 27,080 kilowatt hours, or the power required was 171 horse-power. No. 1 Mill has the following motors:

One 6-pole, 60 horse-power, form "K," General Electric induction motor using an alternating current, 25 cycle, 3 phase at 440 volts, and making 500 revolutions per minute.

Two 6-pole, 75 horse-power, form "M," motors of same make, current, and speed.

One 6-pole, 75 horse-power, form "K," motor of same make, current, and speed.

One 6-pole, 60 horse-power, form "K", motor of same make, current, and speed, which is belted to one 4-pole, sixty horse-power, General Electric motor, making 880 revolutions per minute and used as a generator to supply a 230-volt direct current to the separator magnets in both mills. The motors in both mills are located in a motor room partitioned off to keep the dust and grit from the bearings as much as possible.

Mill No. 2 (Fig. 289).

The ore is brought from the "Joker" and "Bonanza" shafts in standard gauge "jimmies" holding about 8 tons each, and, after being weighed by a set of Fairbanks track scales, of 45 tons' capacity, is delivered to (52).

52. Bin with a hinged steel chute to control the discharge. From the mine; delivers, via chute, to (53).

53. Blake breaker, with an 18 × 30-inch jaw opening, breaking to 3 inches and making 250 thrusts per minute. Weighs 29 tons. From (52); delivers crushed ore to (54).

54. Twenty-inch Robins belt conveyor with a 4-ply rubber belt having a 0.125-inch rubber cover, a conveying length of 59 feet, a speed of 484 feet per minute, a capacity of about 90 tons per hour, a life of about 1,460 hours, and a slope of 16°. Head driven. From (53); delivers to (55).

55. Screen made up of four 1.5 × 4-foot manganese steel plates, 0.75 inch thick with 0.75 × 1.25-inch openings, and having slopes of 39.5°. From (54); delivers oversize to (56) and undersize to (57).

56. Blake double-jaw breaker, with 6 × 36-inch jaw openings, breaking to 1.5 inches, and making 292 thrusts per minute. From (55); delivers crushed ore to (57).

57. Twenty-inch Robins belt conveyor with a 4-ply rubber belt having a conveying length of 65 feet, a speed of 418 feet per minute, a capacity of about 90 tons per hour, and a slope of 19.5°. From (55) and (56); delivers to (58).

58. Screen made up of 1.5 × 4-foot manganese steel plates, 0.75 inch thick with 0.75 × 1.25-inch openings and having slopes of 38°. From (57); delivers oversize to (59) and undersize to (63).

59. Dividing box. From (58); delivers, via two chutes, to (60).

60. Two 16-inch Robins belt conveyors. From (59); deliver to (61).

61. Two Anaconda rolls, 15 × 40 inches, making 60 revolutions per minute and set 0.5 inch apart. From (60); deliver crushed ore to (62).

62. Twenty-inch Robins belt conveyor with a slope of 16.5° and head driven. From (61); delivers, via chutes, either to (63) or (65).

63. Eighteen-inch elevator with a 10-ply cotton belt having a speed of

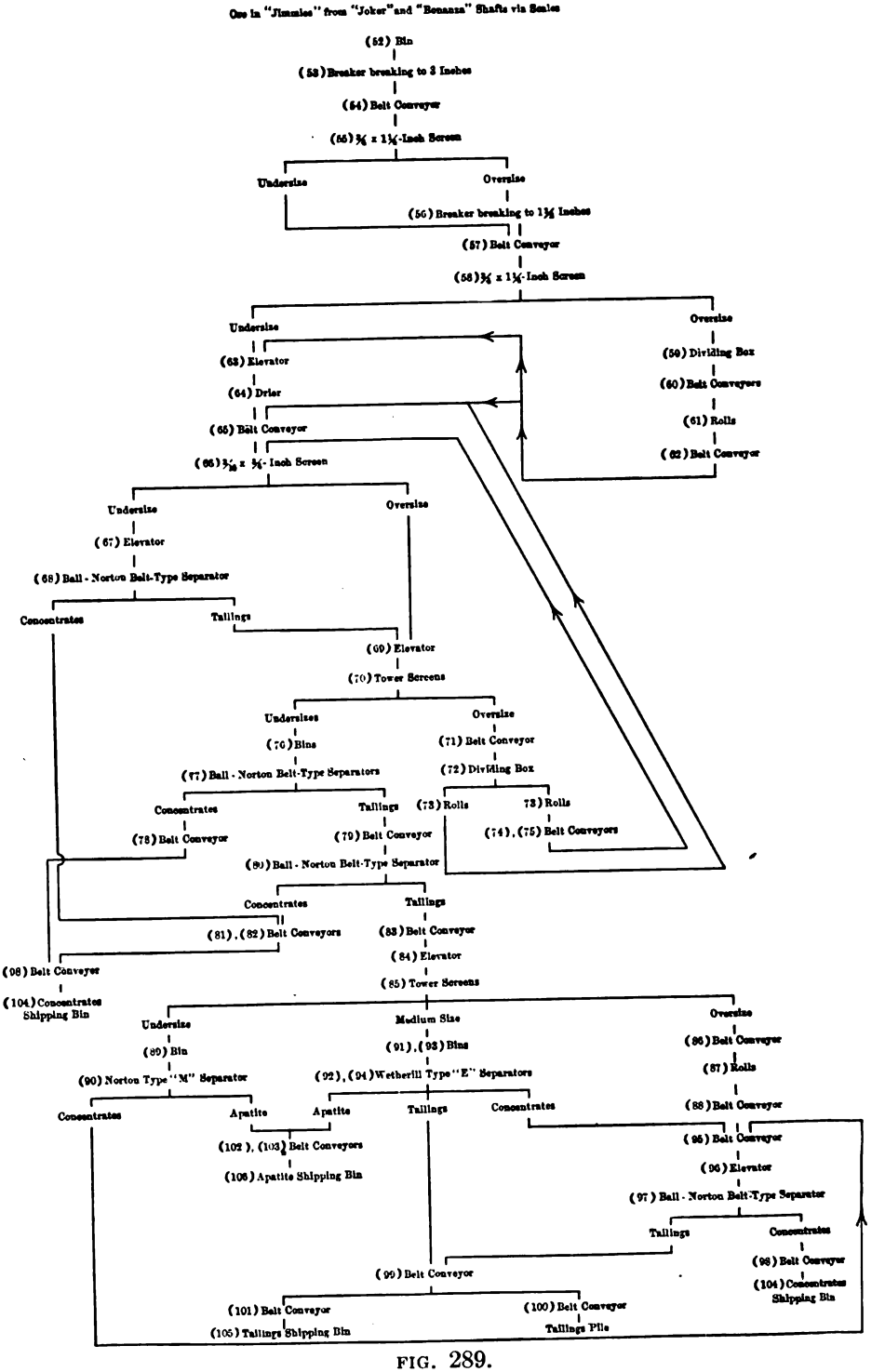
Ore in "Jimmies" from "Joker" and "Bonanza" Shafts via Semles
(52) Bin
(53) Breaker breaking to 3 Inches
(54) Belt Conveyor
(55) ¾ x 1¼-Inch Screen
Undersize
Oversize
(56) Breaker breaking to 1¾ Inches
(57) Belt Conveyor
(58) ¾ x 1¼-Inch Screen
Undersize
Oversize
(63) Elevator
(64) Drier
(65) Belt Conveyor
(66) ⅜ x ¾-Inch Screen
(59) Dividing Box
(60) Belt Conveyors
(61) Rolls
(62) Belt Conveyor
Undersize
Oversize
(67) Elevator
(68) Ball-Norton Belt-Type Separator
Concentrates
Tailings
(69) Elevator
(70) Tower Screens
Undersizes
Oversize
(76) Bins
(71) Belt Conveyor
(77) Ball-Norton Belt-Type Separators
(72) Dividing Box
Concentrates
Tailings
(73) Rolls
73) Rolls
(78) Belt Conveyor
(79) Belt Conveyor
(74), (75) Belt Conveyors
(80) Ball-Norton Belt-Type Separator
Concentrates
Tailings
(81), (82) Belt Conveyors
(83) Belt Conveyor
(84) Elevator
(85) Tower Screens
(98) Belt Conveyor
(104) Concentrates Shipping Bin
Undersize
Medium Size
Oversize
(89) Bin
(91), (93) Bins
(86) Belt Conveyor
(87) Rolls
(90) Norton Type "M" Separator
(92), (94) Wetherill Type "E" Separators
Concentrates
Apatite
Apatite
Tailings
Concentrates
(88) Belt Conveyor
(102), (103) Belt Conveyors
(106) Apatite Shipping Bin
(95) Belt Conveyor
(96) Elevator
(97) Ball-Norton Belt-Type Separator
Tailings
Concentrates
(99) Belt Conveyor
(98) Belt Conveyor
(104) Concentrates Shipping Bin
(101) Belt Conveyor
(100) Belt Conveyor
(105) Tailings Shipping Bin
Tailings Pile

FIG. 289.

300 feet per minute, and steel buckets, 7 × 8 × 12 inches, set 18 inches apart. Head driven. From (58) and (62); delivers to (64).

64. Drier with details as in (22). From (63); delivers dry ore to (65).

65. Sixteen-inch Robins belt conveyor with a 4-ply rubber belt run level at a speed of 500 feet per minute, having a conveying length of 35 feet, a capacity of 90 tons per hour, and an average life of 820 hours. Tail driven. From (62), (64), and (73); delivers to (66).

66. Screen made up of three 1.5 × 2-foot sheet-steel plates, having 0.1875 × 0.75-inch openings and a total screening surface of 9 square feet. From (65) and (75); delivers oversize to (69) and undersize to (67).

67. Sixteen-inch elevator with a 10-ply cotton belt having a speed of 189 feet per minute and steel buckets, 7 × 8 × 12 inches, elevating the ore 14 feet. From (66); delivers to (68).

68. One Ball and Norton Belt-type magnetic separator with a capacity of 15 tons per hour. From (67); delivers concentrates, via chute, to (81) and tailings to (69).

69. Twenty-inch elevator with a 10-ply cotton belt having a speed of 275 feet per minute and steel buckets, 6 × 7 × 16 inches, elevating the ore 70 feet. From (66) and (68); delivers to (70).

70. Tower screens made up of stationary Hendrick perforated steel plates, each 1.5 × 2 feet, set at an angle of 38°. There are four sets of screens making five sizes of products. Each size of screen is made up of 11 plates and there are 66 square feet of screening surface to each screen, or 264 square feet in all. The following size openings are used, but are sometimes varied to suit conditions, according to the character of the ore received or the products desired; the first size is 0.094 × 0.5 inch; the second, 0.1875 × 0.75 inch; the third, 0.25 × .05 inch; and the fourth, 0.375 × 0.75 inch. From (69); deliver the different undersizes to (76) and the oversize to (71).

71. Fourteen-inch Robins belt conveyor having a conveying length of 40 feet and a slope of 14°. Head driven. From (70); delivers to (72).

72. Dividing box. From (71); delivers, via two chutes, to (73).

73. Two Reliance rolls, 14 × 36 inches, making 76 revolutions per minute. From (72); one delivers crushed ore to (74) and the other to (65).

74. Sixteen-inch Robins belt conveyor having a conveying length of 15 feet. From (73); delivers to (75).

75. Sixteen-inch Robins belt conveyor having a conveying length of 16 feet. From (74); delivers to (66).

76. Four bins. From (70); delivers, via roller feeders, to (77).

77. Five Ball and Norton belt-type magnetic separators. Each has 12 poles wound with 200 turns of No. 11 enameled wire carrying a maximum current of 9 amperes and, at present, using 200 volts. One hundred and ten volts have been used when more convenient. The separators are connected with resistance boxes which control the current that can be cut down to 3 amperes when desired. The distance between the feed belt and magnets is about 1 inch, but this distance is adjustable and by varying this, as well as the current, the iron contents of the concentrates can be varied at will. From (76), two separators working on the finest size; deliver concentrates to (78) and tailings to (79).

78. Twenty-inch Robins belt conveyor having a conveying length of 37 feet and a life of about 5 years. From (77); delivers to (98).

79. Fourteen-inch Robins belt conveyor running level at a speed of 320 feet per minute, having a conveying length of 47 feet and a life of about 5 years. From (77); delivers to (80).

80. One Ball and Norton belt-type magnetic separator. Conveyor (79)

becomes the feed belt for this separator by substituting a roller, with a spreading device over the belt, for a troughing idler, near the discharge end. This separator recovers ore which may have passed the other machines due to too heavy a feed or any other causes. From (79); delivers concentrates to (81) and tailings to (83).

81. Sixteen-inch Robins belt conveyor. From (68) and (80); delivers to (82).

82. Sixteen-inch Robins belt conveyor with a conveying length of 55 feet. From (81); delivers to (98).

83. Fourteen-inch Robins belt conveyor having a conveying length of 19 feet, a speed of 234 feet per minute, and a slope of 20.5°. From (80); delivers to (84).

84. Eighteen-inch elevator with a 10-ply cotton belt having a speed of 250 feet per minute and steel buckets, 6 × 6 × 10 inches, elevating the ore 44 feet. From (83); delivers to (85).

85. Tower screens made up of stationary perforated steel plates, each 1.5 × 2 feet, set at an angle of 38°. There are two sets of screens making three sizes of products. Each size of screen is made up of 12 plates and there are 36 square feet of screening surface to each screen or 72 square feet in all. The first size has 0.031 × 0.5-inch holes, and the second size has 0.063 × 0.5-inch holes. From (84); deliver material through the first size to (89), material through the second size to (91) and (93), and the oversize to (86).

86. Fourteen-inch Robins belt conveyor. From (85); delivers to (87).

87. Traylor high-speed rolls, 10 × 32 inches, making 235 revolutions per minute. From (86); deliver crushed ore to (88).

88. Sixteen-inch Robins belt conveyor. From (87); delivers, via chute, to (95).

89. Bin. From (85); delivers to (90).

90. One Norton type "M" magnetic separator which is made up of powerful magnets having 420 turns of No. 11 enameled wire, carrying 7.5 amperes, at 200 volts. The top pieces, containing the magnets, are also wound with 200 turns of the same wire and carry the same current. This separator picks up all material having any particles of magnetite attached, considerable hornblende, and some of the red crystals of apatite. From (89); delivers concentrates to (95) and apatite to (102).

91. Bin. From (85); delivers to (92).

92. Wetherill type "E" magnetic separator. From (91); delivers concentrates to (95), apatite to (102), and tailings to (99).

93. Bin. From (85); delivers to (94).

94. Wetherill type "E" magnetic separator. From (93); delivers concentrates to (95), apatite to (102), and tailings to (99).

95. Fourteen-inch Robins belt conveyor with a conveying length of 27 feet. From (88), (90), (92), and (94); delivers to (96).

96. Ten-inch elevator, 18 feet high. From (95); delivers to (97).

97. One Ball and Norton belt-type magnetic separator. From (96); delivers concentrates to (98) and tailings to (99).

98. Twenty-inch Robins belt conveyor having a conveying length of 109 feet, a speed of 262 feet per minute, and a slope of 5.5°. Head driven. From (78), (82), and (97); delivers to (104).

99. Fourteen-inch Robins belt conveyor. From (92), (94), and (97); delivers to (100) or (101).

100. Fourteen-inch Robins belt conveyor. From (99); delivers to the tailings pile.

101. Fourteen-inch Robins belt conveyor. From (99); delivers to (105).

102. Fourteen-inch Robins belt conveyor. From (90), (92), and (94); delivers to (103).

103. Fourteen-inch Robins belt conveyor. From (102); delivers to (106).

104. Concentrates shipping bin. From (98); delivers, via cars and scales, to furnaces. Used for foundry pig and basic steel production.

105. Tailings shipping bin. From (101); delivers tailings to tailings pile.

106. Apatite shipping bin. From (103); delivers, after weighing, apatite for fertilizers running from 45 to 50% bone phosphate.

Most of the time separators (92) and (94) will produce apatite running higher in phosphorus than the separator (90) whose product runs about 45% bone phosphate. (90), however, will handle 4 times as much as either (92) or (94). Part of the time, when a larger proportion of the apatite is slightly magnetic, separators (92) and (94) throw it out with the hornblende. Then the product of (90) will be higher in phosphorus than either (92) or (94).

Experience at this plant has shown that the coarse material does not carry enough moisture to interfere with a good separation, and consequently only the fines are put through the drier (64) ordinarily. It was found that in very cold weather, when all the ore was passed through the drier, all the heat available from the grate surface would only warm the ore to the melting point of the frost. By keeping out the coarse material the fines could be dried nicely and, the coarse being delivered to the conveyor before it reached the drier, formed an effective protection to the belt from the hot material of the drier.

A peculiar feature of mill construction occurs at this plant. The screen (66), elevator (67), and separator (68) were put in for additional separating capacity and to relieve elevator (69) of a part of the load. This works out very satisfactorily as the screen (66) removes just about enough feed for (68). A very good layout for a mill could be made with this arrangement in series, thus avoiding high elevators and screens, and, consequently, saving mill height.

The iron concentrates will run about 65.5% in iron and 0.8% in phosphorus and represent 85% of the material treated. The apatite concentrates contain about 10% phosphorus, equivalent to 50% bone phosphate, and represent 7.5% of the material treated. The other 7.5% of the material treated is in the tailings which run about 12% in iron.

During April, 1908, this mill treated 18,026 tons of crude ore. It operated one 10-hour shift per day for 6 days a week, and employed 22 men. In the same month the mill was running 205.5 hours. It was idle 33.5 hours for repairs, 10 hours because of no ore, and 3 hours because of no power.

Power.

The total power used in April, 1908, was 22,310 kilowatt hours, or the power required was 145 horse-power. Mill No. 2 has the following motors:

Two 6-pole, 100 horse-power, form "M," General Electric induction motors using an alternating current, 25 cycle, 3 phase at 440 volts, and making 500 revolutions per minute.

One 6-pole, 60 horse-power, form "K," motor of same make, current, and speed.

One 6-pole, 15 horse-power, form "K," motor of same make, current, and speed.

The latest motors installed have been form "M," having collector rings on account of the great starting torque obtainable. This is needed to start the mill, particularly in cold weather when the belts have become stiff. On this account the motor capacity is nearly double the average power used.

Electrical power costs approximately one cent per horse-power hour.

Power for both mills and the mines is furnished by two water-power plants and three steam plants.

The water-power plant at Wadham's operates under a head of 48 feet

and has a generator of 300 kilowatts' capacity, while the one at Kingdom has a head of 290 feet and a generator capacity of 375 kilowatts. At present the combined water-power plants furnish about 450 kilowatts which is transmitted, at 6,600 volts, to the mines.

The steam plant at Port Henry, New York, on Lake Champlain, consists of one 800-kilowatt Curtis turbine; a 2-pole, 800-kilowatt generator, generating a 25-cycle, 3-phase current at 6,600 volts and making 1,500 revolutions per minute; one 2,500 square-foot surface condenser with auxiliaries; four 250 horse-power Babcock and Wilcox boilers with superheaters; one 25-kilowatt Curtis exciter set; and one 20-kilowatt motor-generator set. The power lines are carried 4 miles to a sub-station at the mines, from whence step-down transformers distribute the current at 3,300 volts.

The steam plant in the Central Power House, at the mines, consists of one 750-kilowatt, alternating-current, 3,300-volt generator direct connected to a 1,200 horse-power compound Corliss condensing engine with suitable accessories. The current from the Central plant is joined to that from Port Henry and the two water powers are distributed on the same wires, after leaving the transformers which reduce the voltage to 3,300 volts, and carried to points where the motors are located, when it is further reduced to 440 volts by transformers near the motors.

Water.

The water supply system affords water, by gravity, for fire protection, drinking water, and boilers.

The reservoir is located 0.75 mile from the Old Bed power house and 100 feet above it. The water is unusually soft, and it leaves a scale in the boilers, after two years' use, of not over 0.125-inch thickness.

Costs.

The author is unable to obtain the costs at this property, but Table 131 (see opposite page) gives a detailed cost statement of a very similar plant located in the same district.

§ 660. LEBANON PLANT OF THE PENNSYLVANIA STEEL COMPANY, LEBANON, PENNSYLVANIA. — This plant, having a capacity of 975 tons per 24 hours, is shown in Fig. 290. (See page 538.) The ore comes from the Cornwall deposits and occurs as soft deposits of magnetite resting against igneous dikes. It is low in phosphorus and is used in making Bessemer pig iron. The economic minerals are magnetite, chalcopyrite, and pyrite in a gangue of limestone and sandstone slate. The crude ore runs about 42% iron, 2% sulphur, and 0.45% copper. The problem is to save the iron and copper.

Breaking Plant.

The ore comes to the plant, via railroad cars with drop bottoms, and is delivered, through a chute 4 feet wide with a steel-plate bottom, to (1).

1. One No. 6 "K" Gates breaker breaking to 2.5 inches, making 350 revolutions per minute, and having a capacity of 1,000 tons per 24 hours. Requires 2 men per shift to attend it and the rings and dies have a life of 1 year. From the railroad cars; delivers crushed ore to (2).

2. Grizzly, 4.5 feet long, having a slope of 45° and 0.5 × 2-inch bars, set 1 inch apart and running crosswise. From (1); delivers oversize, via shaking feeder, chute, and roller, to (3) and undersize to (4).

3. One set of Anaconda-type rolls, 15 × 40 inches. Have fixed and movable rolls with springs. Crush to 0.625 inch and make 45 revolutions per minute. From (2); deliver crushed ore to (4).

4. Robins 16-inch rubber belt conveyor with a conveying length of 200

TABLE 131. — DETAILS IN THE COST OF MINING AND MILLING EASTERN IRON ORE.

Tonnage. Run of mine ore in 1907 ..... 566,037 tons.

	Labor per Ton.	Supplies per Ton.	Total per Ton.
Superintendence, captains, shift bosses, and timekeepers	$0.040	.....	$0.040
Stoping	0.261	$0.159	0.420
Tramming (underground) tracks and cars	0.313	0.017	0.330
Pumping	0.013	0.021	0.034
Exploration and development	0.025	0.021	0.046
Underground expense	0.008	0.007	0.015
Total mining (underground)	$0.660	$0.225	$0.885
Hoisting	$0.039	$0.054	$0.093
Top landing, tramming (surface), railroad tracks, and yards	0.006	0.000	0.006
Stacking, sorting, and loading ore	0.027	0.001	0.028
Crushing ore	0.010	0.012	0.022
Mining engineer	0.006	0.001	0.007
Office expense	0.018	0.012	0.030
Surface expense, warehouse, contributions, and accidents	0.012	0.013	0.025
Depreciation (inventory, improvement, and new construction)	.....	0.044	0.044
Taxes and insurance	.....	0.025	0.025
Total mining (surface)	$0.118	$0.162	$0.280
" " (underground)	0.660	0.225	0.885
Grand total	$0.778	$0.387	$1.165

Tonnage of magnetically separated iron ore for 1907 ..... 337,469 tons.
Tons of crude ore per ton of concentrates ..... 1,308 tons.

Crushing ore	$0.015	$0.024	$0.039
Driers	0.009	0.015	0.024
Separators, magnetic	0.019	0.005	0.024
Power	0.021	0.059	0.080
Haulage expense	0.013	0.003	0.016
Screens	0.007	0.002	0.009
Lubricating machinery	0.007	0.005	0.012
Millmen	0.019	.....	0.019
Superintendents, foremen, and timekeepers	0.022	.....	0.022
General mill expense	0.014	0.011	0.025
Loading products	0.020	0.000	0.020
Building repairs and belting renewals	0.001	0.042	0.043
Car repairs, switching charges, railroad tracks, and yards	0.017	0.087	0.104
Analysis	0.005	0.004	0.009
Office expense	0.017	0.011	0.028
Surface expense, warehouse, contributions, and accidents	0.010	0.004	0.014
Depreciation (inventory, improvement, and new construction)	.....	0.117	0.117
Insurance and taxes	.....	0.015	0.015
Total concentrating	$0.216	$0.404	$0.62

feet, a slope of 22°, a speed of 300 feet per minute, and a capacity of 1,000 tons per 24 hours. From (2) and (3); delivers to (5).

Concentrating Plant.

5. Wooden bin of 2,000 tons' capacity with a flat bottom. From (4); delivers, via 4 rollers 3 feet in diameter, to (6) and, via 2 shaking feeders, to (8).

6. Four 5-foot wet ball mills. Inside diameter 5 feet and outside length 7 feet. Crush to 1.5 millimeters. Two hundred cast-iron balls, 6 inches in diameter and weighing 30 pounds each, are put into the mill at the start and 2 or 3 new ones are added each day to keep the charge up to weight. For good work there should be a mixture of large and small balls at all times. Manganese-steel linings were used, but in 3 or 4 months' time they wore from 4 inches thick to 2.5 inches and had to be discarded. Chilled-iron linings are now being used and last from 8 to 12 months. The capacity of each is from 100 to 125 tons per 24 hours. Punched plate, with holes 0.625 inch in diameter, is used for chip screens. Speed 20 revolutions per minute. Fed at one end and discharged at the other. From (5); deliver crushed ore to (7).

7. Five double Gröndal magnetic separators designed for strongly magnetic material. Stationary magnets surrounded by revolving laminated drums.

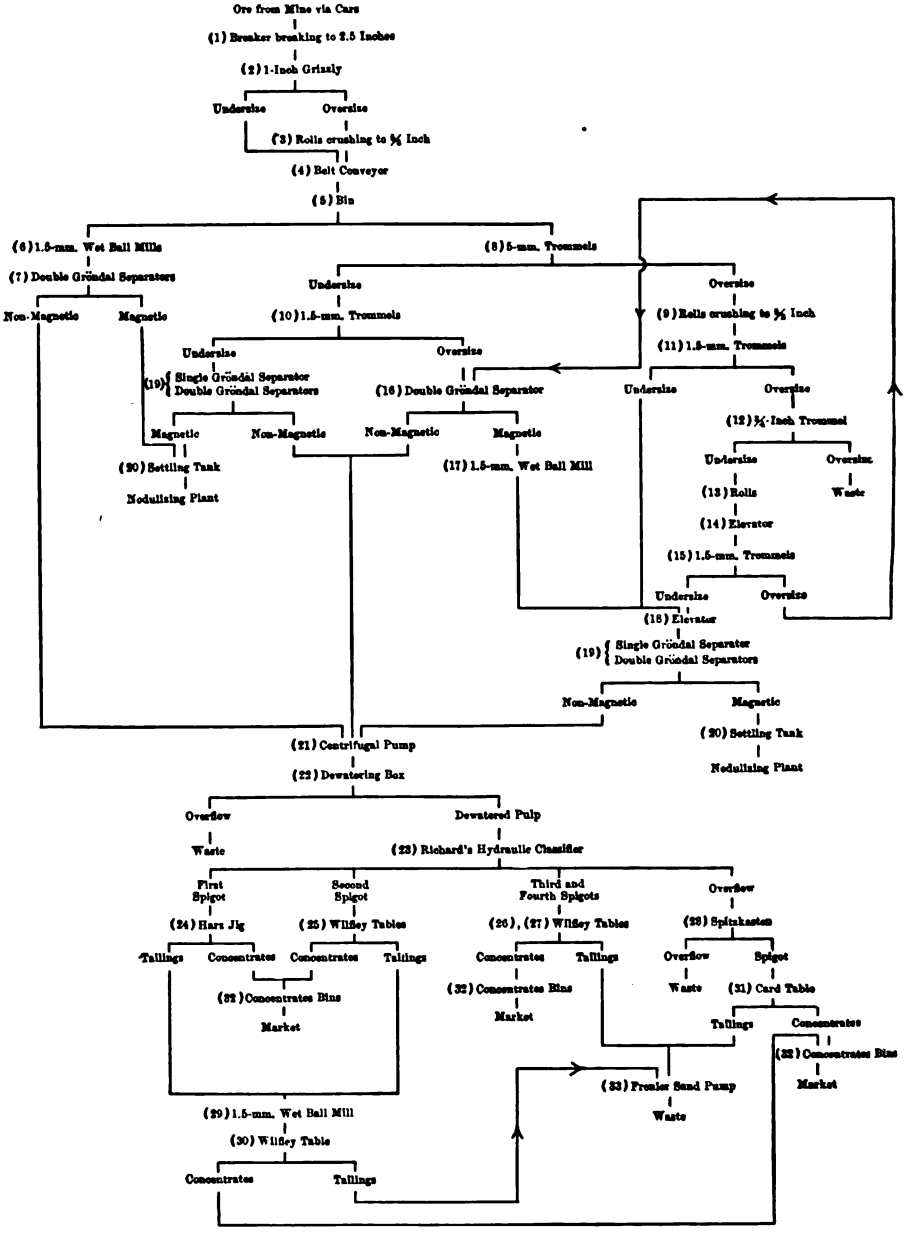

FIG. 290.

The speed of the drums is 90 revolutions per minute. Current 4.5 amperes and voltage from 220 to 250 volts. There are 20,000 ampere turns to each drum and the 2 drums are connected up in series. It requires 1.3 horse-power

for the magnets and from 1.5 to 3 horse-power to revolve the drums. From (6); deliver mangetic or iron product to (20) and non-magnetic product to (21).

8. Two trommels, 3 × 7 feet, having punched-plate screens with holes 5 millimeters in diameter, slopes of 0.625 inch to the foot, speeds of 20 revolutions per minute, and capacities of from 100 to 200 tons per 24 hours. From (5); deliver oversize to (9) and undersize to (10).

9. One set of Anaconda-type rolls, 15 × 40 inches, crushing to a maximum of 0.625-inch cubes, making 60 revolutions per minute, and having a capacity of from 400 to 500 tons per 24 hours. For other details see (3). From (8); deliver crushed ore to (11).

10. Two trommels, 3 × 7 feet, with holes 1.5 millimeters in diameter. Other details like (8). From (8); deliver oversize to (16) and undersize to (19).

11. Three trommels, 3 × 7 feet, with holes 1.5 millimeters in diameter. Only two used. Other details like (8). From (9); deliver oversize to (12) and undersize to (18).

12. Trommel, 3 × 5 feet, with punched-plate screens having holes 0.75 inch in diameter, a slope of 0.625 inch to the foot, and making 20 revolutions per minute. Used only to remove chips. From (11); delivers oversize to waste and undersize to (13).

13. One set of Anaconda-type rolls, 15 × 40 inches, having a speed of 75 revolutions per minute and a capacity of 100 tons per 24 hours. Set close. Shells last 18 months. From (12); deliver crushed ore to (14).

14. Fourteen-inch elevator with a 9-ply rubber belt having a life of from 8 to 12 months, a speed of 200 feet per minute, capacity of 150 tons per 24 hours, and 12-inch malleable-iron buckets, set 12 inches apart, elevating the ore 40 feet. From (13); delivers to (15).

15. Four trommels, 3 × 7 feet, with holes 1.5 millimeters in diameter. Only two used. Other details like (8). From (14); deliver oversize to (16) and undersize to (18).

16. One double Gröndal coarse magnetic separator. For details see (7). From (10) and (15); delivers magnetic or iron product to (17) and non-magnetic product to (21).

17. Wet ball mill crushing to 1.5 millimeters. From (16); delivers crushed ore to (18).

18. Fourteen-inch elevator with details like (14). From (11), (15), and (17); delivers to (19).

19. Six double and one single Gröndal magnetic separators (six working). For details see (7). From (10) and (18); deliver magnetic product to (20) and non-magnetic product to (21).

20. Settling tank for iron concentrates, 45 × 34 × 12 feet deep, divided into 4 compartments and coupled with a draining pit. From (7) and (19); delivers settlings, via electric grab bucket, to nodulizing plant and overflow to waste.

21. Frayer 6-inch centrifugal water-lined pump, having a speed of 650 revolutions per minute, and a capacity of 250 tons per 24 hours against a lift of 40 feet. Runners last from 2 to 3 months and linings 6 to 10 months. From (7), (16), and (19); delivers to (22).

Copper Department.

22. Dewatering box, 8 × 9 × 10 feet. From (21); delivers spigot to (23) and overflow to waste.

23. One Richards' hydraulic classifier, with 4 spigots, having a capacity of 250 tons per 24 hours. From (22); delivers first spigot to (24); second spigot to (25), third spigot to (26), fourth spigot to (27), and overflow to (28).

24. One 3-compartment Harz jig with sieves, 2 × 3 feet, of 8-mesh. 18-wire cloth. The plungers make 70 2-inch strokes per minute. From (23); delivers discharges and hutches to (32) and tailings to (29).

25. Two Wilfley tables making 240 0.5-inch throws per minute. Capacity from 25 to 30 tons per 24 hours. Only one run, one held as a spare. From (23); deliver concentrates to (32) and tailings to (29).

26. One Wilfley table with details as in (25). From (23); delivers concentrates to (32) and tailings to (33).

27. One Wilfley table with details as in (25). From (23); delivers concentrates to (32) and tailings to (33).

28. Spitzkasten, 6 feet square. From (23); delivers spigot to (31) and overflow to waste.

29. Wet ball mill, 4 × 4 feet, crushing to 1.5 millimeters. From (24) and (25); delivers, via steam jet elevator, to (30).

30. One Wilfley table making 240 0.75-inch throws per minute. Capacity from 15 to 20 tons per 24 hours. From (29); delivers concentrates to (32) and tailings to (33).

31. One Card table making 240 0.75-inch throws per minute. From (28); delivers concentrates to (32) and tailings to (33).

32. Separate V-shaped copper-concentrates bins, with 60° slopes to the sides, for each machine. From (24), (25), (26), (27), (30), and (31); deliver copper concentrates, via wheelbarrow, to market or storage and overflow to waste.

33. Frenier sand pump. From (26), (27), (30), and (31); delivers to waste.

The following gives an idea of the results obtained:

	Tons.	Percent. Iron.	Percent. Sulphur.	Percent. Copper.
Crude ore	100	45.00	2.00	0.45
Magnetic concentrates	70	60.64	1.00	0.20
Copper "	3	39.00	28.00	5.00
Tailings	27	12.00	1.00	0.20

At this plant the Wilfley and Card tables do equally good work on fine material and the construction of both is very good. In this district where iron is cheap the cost of crushing by ball mills and by rolls and screens is about equal. Ball mills require less attention to operate and keep in repair than rolls. The size of the product is kept constant at 1.5 millimeters by regulating the quantity of water and feed to suit the hardness of the ore.

All slime water and tailings are collected and settled, the clear water being re-pumped to the mill system again.

Labor and Wages.

The mill operates on two 12-hour shifts per day, 7 days per week. There are employed 14 men per shift in the mill, 2 men in the engine room, and 2 men in the boiler room. Common labor receives 12 cents per hour and foremen 22 cents per hour.

Power and Water.

Babcock and Wilcox boilers with a total capacity of 1,000 horse-power, using blast furnace gas for fuel, furnish steam at 110 pounds pressure to the following engines: One simple non-condensing Corliss engine, 22 × 48 inches, furnishes 375 horse-power for the mill; one engine of the same style, 16 × 36 inches, furnishes 175 horse-power for the Gates breaker and the first set of rolls; two Buckeye engines, 16.5 × 18 inches, are direct connected to two

Westinghouse direct-current generators and also furnish power for the nodulizing department. The generators each deliver 180 kilowatts at 250 volts.

The distribution of power is about as follows:

Gates breaker (1)	50	horse-power.
Rolls (3)	10	" "
Belt conveyor (4)	15	" "
Two rolls (9) and (13)	25	" "
Fine ball mills (6) and (17)	125	" "
Two elevators (14) and (18)	5	" "
Twelve screens (8), (10), (11), (12), and (15)	10	" "
Frayer 6-inch pump (21)	25	" "
Twelve separators (7), (16), and (19)	50	" "
Water pumps	100	" "
Lights	10	" "
Total	425	" "

From 750,000 to 1,000,000 gallons of water are required per 24 hours. This is pumped by one 10-inch centrifugal pump 15 feet, and by two 10-inch, 2-stage Morris centrifugal pumps (one spare) 50 feet, to a 61,000-gallon supply tank.

§ 661. BOSTON AND MONTANA CONSOLIDATED COPPER AND SILVER MINING COMPANY, GREAT FALLS, MONTANA. — The mill has 6 sections, and 2 middlings departments, each to handle the middlings from 3 sections of the main mill. This mill is given to show the modern practice on Butte copper ores and is shown in diagrams by Figs. 291 and 292. The total capacity of the mill is 3,000 tons per 24 hours, 500 tons per section. The mill runs 24 hours a day, 7 days a week, on ore from the company's mines located at Butte, 171 miles distant. The ore is brought to the works by the Great Northern Railroad in bottom-dumping cars of 50 tons' capacity.

In mining the ore two classes are made, one for smelting and the other for concentrating. The ore consists of the following minerals in a gangue of quartz and partially decomposed granite: pyrite, chalcocite, enargite, bornite, covelite, chalcopyrite, tetrahedrite, tennantite, galena, sphalerite, and a telluride (in form not determined).

Variations in the grade of the ore occur from month to month, depending upon the relative quantities shipped from the several shafts, but analysis following the description of the mill will give some idea of the work done in concentrating.

The physical condition of the ore as it is received by the mill is shown in the following summary of tests on carload lots from the four most important mines of the company. (See Table 132, page 542.) See also Table 133, page 548 which gives analysis of ore, concentrates, and tailings.

Concentrator (*Fig.* 291).

1. Six storage bins with a total capacity of 14,600 tons. From railroad cars; deliver, via gates and chutes, to (2).

2. Six ore feed bins with a total capacity of 7,600 tons. From (1); deliver, via gates and chutes, to (3).

Since all sections are nearly alike the author will describe only the sixth, noting differences in other sections as they are met.

Sixth Section (*Fig.* 191).

3. Two automatic ore feeders. From (2); deliver, via chutes, to (4).

4. Two grizzlies with 38.1-millimeter spaces between the bars. From (3); deliver oversize to (5) and undersize to (9).

5. Two 2-foot picking belts with conveying lengths of 18 feet and speeds of 50 feet per minute. From (4); deliver ore to (6) and high-grade ore to the smelter.

TABLE 132. — SUMMARY OF HAND-SORTING TESTS ON SECOND-CLASS ORE.

	A.			B.			C.			D.		
	Percent Original Solid.	Copper Assay.	Percent Original Copper.	Percent Original Solid.	Copper Assay.	Percent Original Copper.	Percent Original Solid.	Copper Assay.	Percent Original Copper.	Percent Original Solid.	Copper Assay.	Percent Original Copper.
Original ore	100.00	4.69	100.00	100.00	3.99	100.00	100.00	4.12	100.00	100.00	3.43	100.00
Over 1.75 inch grizzly	11.79	5.77	14.50	45.71	2.73	31.30	34.53	4.35	36.40	25.25	3.53	25.75
Through 1.75 inch grizzly, on 38.1-millimeter round hole	6.60	5.39	7.58	10.26	3.13	8.10	10.63	2.87	7.40	12.82	1.96	7.14
Through 38.1 and on 1-millimeter round hole	51.36	4.59	50.34	34.10	4.88	41.70	38.48	4.16	38.90	42.65	3.51	43.71
Through 1-millimeter round hole	30.24	4.28	27.58	9.93	7.61	18.90	16.36	4.35	17.30	19.28	3.70	20.71
Through 200 mesh	12.66	4.00	.....	3.94	9.40	.....	10.18	4.40	.....	10.75	2.80	.....
Over 1.75-inch Grizzly — Hand Picking — Based on Original Ore.												
First Class	3.84	14.70	12.01	2.79	10.43	7.30	12.37	9.20	27.60	3.55	16.03	16.76
Second Class	7.95	1.47	2.49	42.92	2.22	24.00	22.16	1.64	8.80	21.70	1.53	11.75

6. One coarse Blake breaker with a jaw opening, 10 × 20 inches, and making 270 thrusts per minute. From (5); delivers crushed ore to (7).

7. Two cast-iron trommels, 3 × 4 feet, having cored holes 38.1 millimeters in diameter, speeds of 12 revolutions per minute, and slopes of 3 inches to the foot. From (6); deliver oversize to (8) and undersize to (9).

8. Two fine Blake breakers with jaw openings, 5 × 12 inches, and making 300 thrusts per minute. From (7); deliver crushed ore to (9).

9. Two 12-inch elevators made of 8-ply rubber belting and having speeds of 345 feet per minute. Malleable-iron buckets, 6 × 11 inches, spaced 12 inches apart. Capacity 400 tons per 24 hours. From (4), (7), (8), (16), and (20); deliver to (10).

10. Two trommels, 3 × 6 feet, having round punched holes 22.2 millimeters in diameter, speeds of 20 revolutions per minute, and slopes of 2 inches to the foot. From (9); deliver oversize to (15) and undersize to (11).

11. Two trommels, 3 × 6 feet, having round punched holes 8 millimeters in diameter, speeds of 16 revolutions per minute, and slopes of 1.5 inches to the foot. From (10); deliver oversize to (17) and undersize to (12).

12. Mixing box, made of 2-inch plank 5 feet long, 2.5 feet wide, and 3 feet deep, inside measurements. From (11); delivers to (13).

13. Two trommels, 3 × 6 feet, having round punched holes 5 millimeters in diameter, speeds of 18 revolutions per minute, and slopes of 1.25 inches to the foot. From (12); deliver oversize to (21) and undersize to (14).

14. Two trommels, 3 × 6 feet, having round punched holes 2.5 millimeters in diameter, speeds of 18 revolutions per minute, and slopes of 1 inch to the foot. From (13); deliver oversize to (22) and undersize to (28).

15. Two Harz bull jigs with 1 compartment each. Sieves are 24.5 × 42.25 inches with 0.31-inch square punched holes. Plungers make 180 2.5-inch strokes per minute. From (10), fed with 38.1 to 22.2-millimeter stuff; deliver cup discharges to (18), hutch products to (17), and tailings to (16).

16. One pair coarse-crushing rolls, 15 × 28 inches, having cast-iron shells 4 inches thick and a speed of 190 revolutions per minute. From (15); deliver crushed product to (9).

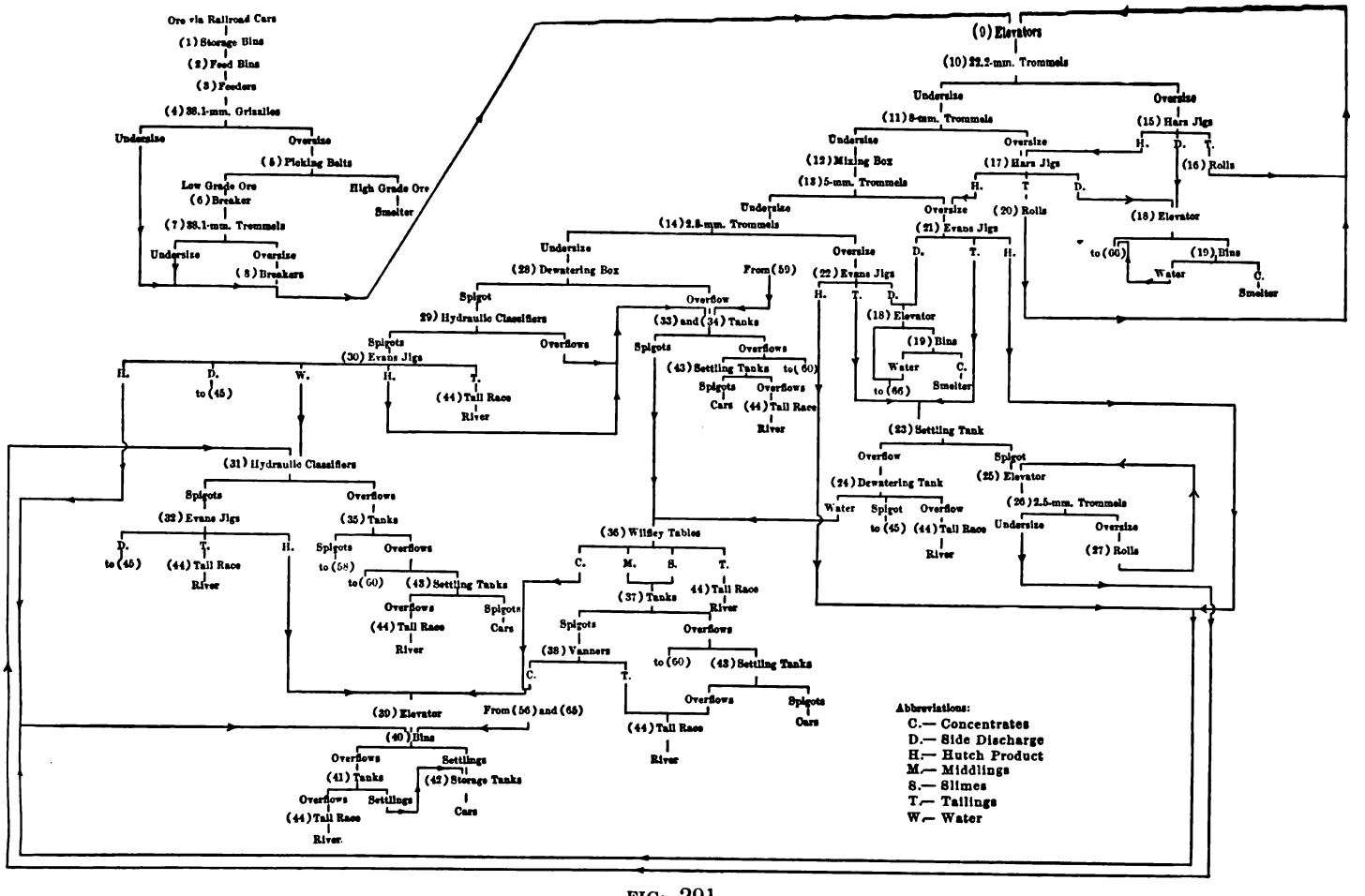
Ore via Railroad Cars
(1) Storage Bins
(2) Feed Bins
(3) Feeders
(4) 38.1-mm. Grizzlies
Undersize
Oversize
(5) Picking Belts
Low Grade Ore
(6) Breaker
High Grade Ore
Smelter
(7) 38.1-mm. Trommels
Undersize
Oversize
(8) Breakers
(9) Elevators
(10) 22.2-mm. Trommels
Undersize
Oversize
(11) 8-mm. Trommels
(15) Hars Jigs
H. D. T.
(16) Rolls
Undersize
Oversize
(12) Mixing Box
(17) Hars Jigs
H. T D.
(13) 5-mm. Trommels
Undersize
Oversize
(20) Rolls
(18) Elevator
(14) 2.8-mm. Trommels
(21) Evans Jigs
D. T. H.
to (60)
(19) Bins
Water
C.
Smelter
Undersize
Oversize
(28) Dewatering Box
From (59)
(22) Evans Jigs
H. T. D.
Spigot
Overflow
29) Hydraulic Classifiers
(33) and (34) Tanks
(18) Elevator
Spigots
Overflows
(30) Evans Jigs
Spigots
Overflows
(19) Bins
H.
D.
to (45)
W.
H.
T.
(44) Tail Race
River
(43) Settling Tanks
to (60)
Spigots
Overflows
Water
C.
to (66)
Smelter
Cars
(44) Tail Race
River
(23) Settling Tank
(31) Hydraulic Classifiers
Overflow
Spigot
(24) Dewatering Tank
(25) Elevator
Spigots
Overflows
(32) Evans Jigs
(35) Tanks
Water
Spigot
Overflow
(26) 2.5-mm. Trommels
(36) Willey Tables
D.
to (45)
T.
(44) Tail Race
River
H.
Spigots
to (58)
Overflows
to (60)
(43) Settling Tanks
to (45)
(44) Tail Race
River
Undersize
Oversize
(27) Rolls
C.
M.
S.
T.
44) Tail Race
River
Overflows
Spigots
Cars
(37) Tanks
Spigots
Overflows
(38) Vanners
to (60)
(43) Settling Tanks
C.
T.
Overflows
Spigots
Cars
(20) Elevator
From (56) and (65)
(44) Tail Race
River
(40) Bins
Overflows
Settlings
(41) Tanks
(42) Storage Tanks
Overflows
Settlings
Cars
(44) Tail Race
River.
Abbreviations:
C.— Concentrates
D.— Side Discharge
H.— Hutch Product
M.— Middlings
S.— Slimes
T.— Tailings
W.— Water

FIG. 291.

17. Two Harz jigs with 2 compartments each. Sieves are 26 × 36 inches with 0.25-inch square punched holes. Plungers make 180 2-inch strokes per minute. From (11) and (15), fed with 22.2 to 8-millimeter stuff; deliver first and second cup discharges to (18), first and second hutch products to (21) and tailings to (20).

Flow-Sheet of Middlings Department.

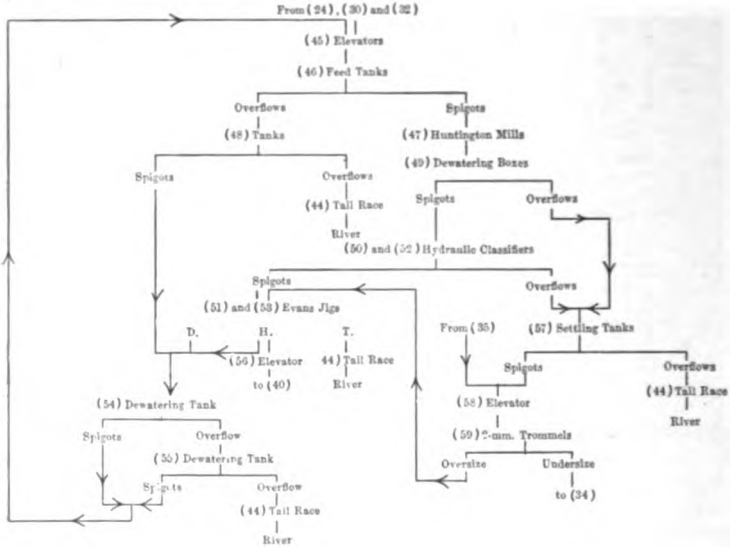

Flow-Sheet of Slimes Plant.

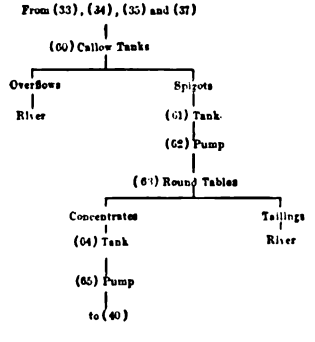

Flow-Sheet of Auxiliary Coarse-Concentrates Tanks.

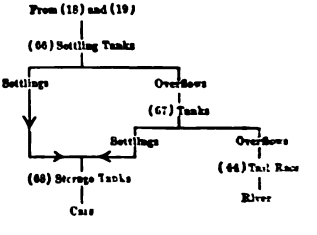

FIG. 292.

18. Fifteen-inch coarse-concentrates elevator with a 10-ply rubber belt, having a speed of 345 feet per minute. Malleable-iron buckets, 6 × 11 inches, spaced 12 inches apart. Capacity 170 tons per 24 hours. From (15), 17), (21), and (22); delivers, with launder on top of building, to (19), or if (19) is full, via second launder on top of building, to (66).

19. Two coarse-concentrates bins with a total capacity of 500 tons. From

(18); deliver coarse concentrates to blast furnace charging cars via gate and chute, and drained water to (66).

20. One pair fine-crushing rolls, 15 × 28 inches, having chilled-steel shells 4 inches thick and a speed of 180 revolutions per minute. From (17); deliver crushed product to (9).

21. Eight Evans jigs with 2 compartments each. Sieves are brass cloth, 20.25 × 40.625 inches, 8 meshes to the inch. Plungers make 195 1.25-inch strokes per minute. From (13) and (17), fed with 8 to 5-millimeter stuff through a launder; deliver first and second cup discharges to (18); first and second hutch products, via launder, to (40); and tailings, via launder, to (23).

22. Eight Evans jigs with 2 compartments each. Sieves are brass cloth, 20.25 × 40.625 inches, 8 meshes to the inch. Plungers make 195 1-inch strokes per minute. From (14), fed with 5 to 2.5-millimeter stuff through a launder; deliver first and second cup discharges to (18); first and second hutch products, via launder, to (40); and tailings, via launder, to (23).

23. Middlings settling and dewatering tank, under the floor. From (21) and (22); delivers overflow to (24) and spigot to (25).

24. Dewatering-screen tank. From (23); delivers overflow to (44); screened water, piped out for wash water, to (36); and slimes settlings by spigot, via launder, to (45).

25. Fifteen-inch middlings elevator with a 10-ply rubber belt having a speed of 560 feet per minute and malleable-iron buckets, 8 × 14 inches, spaced 12 inches apart. Capacity 350 tons per 24 hours. From (23) and (27); delivers to (26).

26. Two trommels, 3 × 6 feet, having round punched holes 2.5 millimeters in diameter, speeds of 20 revolutions per minute, and slopes of 1 inch to the foot. From (25); deliver oversize to (27) and undersize to (31).

27. One pair middlings finishing rolls, 15 × 28 inches, having chilled-steel shells 4 inches thick and a speed of 120 revolutions per minute. From (26); deliver crushed product to (25).

28. Settling and dewatering box. From (14); delivers overflow to (33) and spigot to (29).

29. Two Evans hydraulic classifiers with 4 spigots each. From (28), fed with 2.5 to 0-millimeter stuff; deliver spigots to (30) and overflows to (34).

30. Eight Evans jigs with 2 compartments each. Sieves are brass cloth, 20.25 × 40.625 inches, head sieves 8 and tail sieves 18 meshes to the inch. The plungers make 200 strokes per minute, having lengths in the first compartments of 0.75 inch and in the second compartments of 0.375 inch. From (29); deliver second cup discharges, via launder, to (45); first hutch products of 8 jigs and second hutch products of 6 middle jigs, via launder, to (40); second hutch products of last jigs, via launder, to (34); water over end of four middle jigs to (31) for hydraulic purposes; and remaining water and tailings to (44).

31. Two Evans hydraulic classifiers with 4 spigots each. From (26) and water from (30), fed with 2.5 to 0-millimeter stuff; deliver spigots to (32) and overflows to (35).

32. Eight Evans jigs with 2 compartments each. Sieves are brass cloth, 20.25 × 40.625 inches, head sieves 8 and tail sieves 20 meshes to the inch. The plungers make 225 strokes per minute, having lengths in the first compartments of 0.75 inch and in the second compartments of 0.375 inch. From (31); deliver second discharges, via launder, to (45); first and second hutch products, via launder, to (39); water from four middle jigs and tailings from last four jigs to (44).

33. Feed tank for Wilfley tables. From (28); delivers spigots to (36) and overflow to (43) or (60).

34. Four feed tanks for Wilfley tables. From (29), (30), and (59); deliver spigots to (36) and overflows to (43) or (60).

35. Three feed tanks for Wilfley tables. From (31); deliver spigots to (5) and overflows to (43) or (60).

36. Eleven tables making 240 strokes per minute, having lengths for coarse feed of 0.75 inch and for fine feed of 0.375 inch. From (33), (34), and wash water from (24); deliver concentrates to (39), middlings and slimes to (37), and tailings to (44).

37. Two feed tanks for vanners. From (36); deliver spigots to (38) and overflows to (43) or (60).

38. Twelve 4-foot Frue vanners, 12 feet long, making 200 1-inch strokes per minute. From (37); deliver concentrates to (39) and tailings to (44).

39. Fifteen-inch fine-concentrates elevator with a 10-ply rubber belt having a speed of 470 feet per minute, and malleable-iron buckets spaced 12 inches apart. Capacity 150 tons per 24 hours. From (32), (36), and (38) delivers concentrates to (40).

40. Sixteen fine-concentrates bins, 4 series of 4 each with but 8 in use at one time. From (21), (22), (30), (39), (56), and (65); deliver settlings, via bottom gates, to (42) and overflows to (41).

41. Sixteen side tanks, 4 series of 4 each. From (40); deliver settlings intermittently via shovels, to (42) and overflows to (44).

42. Concentrates storage tanks. From (40) and (41); deliver concentrates, via gates and chutes, to railroad bottom-dump cars.

43. Two slime settling tanks, only one used at a time. From (33), (34), (35), and (37); deliver settlings, periodically via shovels, to railroad cars and overflows to (44).

44. Tail race. From (24), (30), (32), (36), (38), (41), (43), (48), (51), (53), (55), (57), and (67); delivers to river.

Middlings Department. Three Sections United (*Fig.* 292).

45. Two 15-inch middlings elevators with 10-ply rubber belts having speeds of 518 feet per minute and malleable-iron buckets, 8 × 14 inches, spaced 12 inches apart. Capacity 270 tons each per 24 hours. From (24), (30), (32), (54), and (55); deliver to (46).

46. Feed tanks. From (45); deliver spigots to (47) and overflows to (48).

47. Eight 5-foot Huntington mills making 65 revolutions per minute, and each having 5 screens, 9 × 31 inches, with punched-slot holes 1.25 × 12 millimeters. Only 6 in use at one time and 2 spares. From (46); deliver pulp to (49).

48. Four tanks under the floor. From (46); deliver spigots to (54) and overflows to (44).

49. Four settling and dewatering boxes. From (47); deliver spigots to (50) and (52) and overflows to (57).

50. Seven Evans hydraulic classifiers with 4 spigots each. From (49), fed with 1.25 to 0-millimeter stuff; deliver spigots to (51) and overflows to (57).

51. Twenty-eight Evans jigs with 3 compartments each. Sieves are brass cloth, 20.25 × 40.625 inches, 8 to 20 meshes to the inch. The plungers make 210 strokes per minute of the following lengths in inches:

Jig Number.	Head Sieves.	Middle Sieves.	Tail Sieves.
1	0.625	0.562	0.50
2	0.44	0.375	0.31
3	0.375	0.31	0.25
4	0.25	0.19	0.19

From (50) and (59); deliver third cup discharges, from first two jigs of each section, to (54); all first hutch products to (56); second hutch products, from jigs one, two, and three, to (56); second hutch products from jigs four to (54); third hutch products from jigs one and two to (56); third hutch products from jigs three and four to (54); and all tailings to (44).

52. Three Evans hydraulic classifiers with 2 spigots each. From (49), fed with 1.25 to 0-millimeter stuff; deliver spigots to (53) and overflows to (57).

53. Six Evans jigs with 3 compartments each. Sieves are brass cloth, 20.25 × 40.625 inches, 8 to 20 meshes to the inch. The plungers make 210 strokes per minute having lengths like those in (51). From (52); deliver third cup discharges from first jigs to (54); all first, second, and third hutch products from first jigs to (56); third hutch products from second jigs to (54); and all tailings to (44).

54. Settling and dewatering tank. From (48), (51), and (53); delivers spigots to (45) and overflow to (55).

55. Settling and dewatering tank. From (54); delivers settlings to (45) and overflow to (44).

56. Fifteen-inch fine-concentrates elevator with a 10-ply rubber belt having a speed of 470 feet per minute and malleable-iron buckets spaced 12 inches apart. From (51) and (53); delivers concentrates to (40).

57. Six V-shaped settling tanks. From (49), (50), and (52); deliver spigots to (58) and overflows to (44).

58. Fifteen-inch slimes elevator with a 10-ply rubber belt having a speed of .471 feet per minute and malleable-iron buckets, 8 × 14 inches, spaced 12 inches apart. Capacity 100 tons per 24 hours. From (35) and (57); delivers to (59).

59. Two trommels, 3 × 6 feet, having round punched holes 2 millimeters in diameter, speeds of 20 revolutions per minute, and slopes of 1.25 inches to the foot. From (58); deliver oversize to (51) and undersize, which is divided among 3 sections, to (34).

Slimes Plant (*Fig.* 292).

60. Thirty 8-foot Callow tanks having 60° slopes and made of No. 14 sheet steel. From (33), (34), (35), and (37); deliver spigots to (61) and overflows to the river.

61. Tank. From (60); delivers to (62).

62. Centrifugal pump. From (61); delivers to (63).

63. Sixteen Evans round tables, 17 feet in diameter, making 3 revolutions in 5 minutes, and having slopes of 1.25 to 1.50 inches to the foot. The decks of 8 are made of wood, 4 of linoleum, and 4 of cement. From (62); deliver concentrates to (64) and tailings to the river.

64. Tank. From (63); delivers to (65).

65. Centrifugal pump. From (64); delivers to (40).

Auxiliary Coarse-Concentrates Tanks (*Fig.* 292).

66. Sixteen coarse-concentrates settling tanks, 4 series of 4 tanks each, only 8 used at a time. From (18) and (19); deliver settlings, via bottom gates, to (68) and overflows to (67).

67. Sixteen side tanks, 4 series of 4 each. From (66); deliver settlings periodically, via shovels, to (68) and overflows to (44).

68. Concentrates storage tanks. From (66) and (67); deliver concentrates, via gates and chutes, to railroad bottom-dump cars.

Sections No. 1 and 2 differ from Section No. 6 as follows:

3. Omit. Feeding done by hand.

5. Omit. No hand picking.

Two trommels having punched holes 2.5 millimeters in diameter instead of 5 millimeters in diameter, in order to obtain mill height sufficient to feed through 8 on 2.5-millimeter stuff, to (69). From (12); deliver oversize to (69) and undersize to (28).

14. Omit.

21. Omit.

22. Omit.

23. One middlings settling and dewatering tank under the floor. From (69) delivers spigot to (25) and overflow to (24).

28. Settling and dewatering box. From (13); delivers spigot to (29) and overflow to (34).

34. Three feed tanks for Wilfley tables. From (28), (29), (30), (59) and (69); deliver spigots to (36) and overflows to (43) or (60).

69. One Hancock jig which is a continuous movable-sieve power jig. The box, which is 3.5 feet wide and 24 feet long (inside dimensions), is divided into 6 compartments and has at the tailings end an adjustable slimes outlet. The sieve extends over 5 of these compartments and discharges its tailings into the sixth. The sieve is 2.42 × 18.79 feet (active area). Plunger makes 185 0.375-inch strokes per minute. The first compartment has a sieve with holes 5 millimeters in diameter, the second and third compartments have sieves with holes 8 millimeters in diameter, and the fourth and fifth compartments have sieves with holes 12.7 millimeters in diameter. This jig replaces (21) and (22) in 2 sections; that is, it does the work of 32 2-compartment Evans jigs. From (13) and (70), fed with 8 to 2.5-millimeter stuff; delivers first, second, and third hutches to (18); fourth hutch to (70); fifth and sixth hutches to (23); and overflow slimy water to (34).

70. Ten-inch elevator with an 8-ply rubber belt having a speed of 435 feet per minute and malleable-iron buckets, 5 × 8 inches, set 12 inches apart. Capacity 50 tons per 24 hours. From (69); delivers to (69) or, if quality of product warrants it, to (18).

Section No. 3 differs from section No. 6 as follows:

3. Omit. Feeding done by hand.

5. Omit. No hand picking.

33. Omit. Then, —

28. Settling and dewatering box. From (14); delivers spigot to (29) and overflow to (34).

34. Three feed tanks for Wilfley tables. From (28), (29), (30), and (59); deliver spigots to (36) and overflows to (43) or (60).

TABLE 133. — ANALYSIS OF ORE, CONCENTRATES, AND TAILINGS.

	Percent.	Oz. per Ton.		Percent.				
	Copper.	Silver.	Gold.	Silica.	Iron.	Sulphur.	Alumina.	Lime.
Crude ore	3.40	1.19	0.008	56.5	10.4	12.7	11.5	0.15
A — Course concentrates from (15), (17), (21), and (22)	10.03	3.28	0.019	26.7	24.2	30.9	4.8	0.10
B — Fine concentrates from (21), (22), (30), (32), (36), (38), (51), (53), and (63)	7.57	2.69	0.021	18.0	29.8	36.8	4.8	0.10
C — Slimes settlings in (43)	2.31	0.88	0.004	58.4	2.8	3.6	22.5	0.20
Total concentrates and slimes, average by weight of A, B, and C	8.01	2.76	0.019	23.3	26.4	32.9	5.9	0.10
Tailings	0.66	0.23	0.002	77.7	1.8	1.7	12.4	0.10

1 ton crude = 0.3523 ton concentrate, or 2.84 tons into 1.
Loss in copper, 16.9 percent.
Loss in silver, 17.94 percent.

35. Two feed tanks for Wilfley tables. From (31); deliver spigots to (36) and overflows to (43) or (60).

Machinery for hand-picking the ore in sections 1, 2, and 3 has not been installed on account of the crowded condition of the mill and the difficulty of its installation.

The middlings department for sections No. 1, 2, and 3 differs from the middlings department for sections No. 4, 5, and 6 in that Harz 3-compartment jigs are used instead of Evans 3-compartment jigs.

Power.

In June, 1906, under similar conditions as above described, except that the middlings section was running 11 more Evans jigs than at present, the section outlined above and one-third of the middlings section, while milling ore at the rate of 458 tons per 24 hours, indicated 184.4 horse-power on a 6-hour and 40 minutes test. This is a net value and does not include any portion of the belt and shaft friction in the middlings section or the main line shaft. The belts and shaftings in the three sections indicated 76 horse-power. These results were obtained by indicating a single 34 × 60-inch Corliss engine.

The following figures were also obtained: With three sections and one middlings section running, while milling ore at the rate of 1,374 tons per 24 hours, the indicated horse-power was 612.3.

Indicated horse-power per ton of ore per 24 hours	0.45
Percent. of total indicated horse-power to drive engine, ropes, shafting, and belting	27.70 percent.
Engine and ropes	15.30 "
Shafting and belting	12.40 "
Percent. of total power delivered to main line shaft to drive shafting and belting	14.60 "

Power for the mill is developed by two 44-inch turbines, working under a head of 42 feet, and transmitted by rope drive about 1,000 feet length, having one right-angled turn. The wheels register 1,350 horse-power in driving the concentrator machinery.

Water.

The water is supplied by two Roots rotary pumps rated at 14,000 gallons each per minute at full speed, and without allowance for slip. For 3,000 tons daily capacity of the mill, 17,000 gallons are required per minute, or about 25,000,000 gallons per day — about 8,300 gallons per ton of ore treated. This supply has to be pumped to a height of 88 feet, and the power is furnished by a 39-inch turbine, running under a head of 42 feet.

Labor and Wages.

Employed in the whole mill there are 198 men in 24 hours, and the average rate is $3.16 per day of 8 hours. This includes carpenters, machinists, and other men engaged in repairs.

Costs.

At this plant the cost of milling is about 50 cents per ton, made up as follows: Labor 27 cents, power about 11 cents, and general expense, supplies, etc., about 12 cents. Table 134 gives some idea of other costs at this property during 1906 and 1907.

TABLE 134. — BOSTON AND MONTANA COSTS, INCLUDING TRANSPORTATION TO GREAT FALLS, 100 MILES.

Year.	Tons.	Mining per Ton.	Freight to Smelter per Ton.	Reduction per Ton.	Refining, Marketing per Ton.	Total Cost per Ton.
1906	1,209,805	$3.45	$0.93	$2.45	$0.90	$7.73
1907	1,156,785	3.93	0.76	2.67	0.92	8.28

§ 632. Utah Copper Company, Garfield Plant, Garfield, Utah.—This mill, having a capacity of 6,000 tons per 24 hours, is shown diagrammatically in Fig. 293 and is given here to illustrate the method of handling the low-grade porphyry copper-bearing ores of Utah. The economic minerals are chalcocite and bornite, with a considerable quantity of chalcopyrite. Some gold and silver is present. The copper mineral is finely and uniformly disseminated throughout the porphyry gangue, necessitating fine grinding. The average content of the ore is 2% copper, 0.015 ounce gold, and 0.15 ounce silver per ton of ore. The problem is to save the copper, gold, and silver.

The mill is built in 12 sections, each having a capacity of 500 tons per 24 hours. Six of these sections constitute a so-called "unit." The two units are exactly alike and each has its own coarse-crushing department, the term "unit" being applied for identification purposes only and in order to describe one complete group of departments.

The ore comes from Bingham Canyon, a distance, by rail, of 27 miles, via Denver & Rio Grande Railroad, and goes to (1).

1. Scales. On cars. From mine; goes to (2).

2. Coarse-ore storage bin, 600 feet long by 41 feet wide by 28 feet deep, flat bottomed and holds 25,000 tons. Gates, 20 inches square, in two lines in bottom, operated by compressed air. Cylinders, 8 × 25 inches, 4-way air valve operated by hand. From (1); delivers to (3) or (5).

3. Larries, electric cars of 5 tons' capacity, on two tracks below (2). From (2); deliver, via bin, to (4).

One Unit Only.

4. Two grizzlies, 6 feet wide by 10 feet long, with 1.5-inch spaces between the bars. From (3); deliver oversize to (5) and undersize to (6).

5. Two Gates breakers of the 7.5 "K" type, breaking to about 1.5 inches. The feed comes, via 6 air-operated gates, to each breaker. Three thousand tons can go to the breakers from (2), if so desired, by gravity. From (2) or (4); deliver broken ore to (6).

6. Two 24-inch elevators having speeds of 400 feet per minute, buckets 8 × 24 inches, set 24 inches apart, and elevating the ore 58 feet. From (4), (5), and (8); deliver to (7).

7. Four trommels, 4 × 9 feet with screens having 1.25-inch holes and 0.25-inch wires, slopes of 2 inches to the foot, and making 24 revolutions per minute. From (6); deliver oversize to (8) and undersize to (9).

8. Rolls, 20 × 54 inches, making 60 revolutions per minute with a spring pressure of 300,000 pounds. From (7); deliver crushed ore to (6).

9. Twenty-four inch elevator having a speed of 375 feet per minute, buckets 8 × 24 inches, set 24 inches apart, and elevating the ore 59 feet. From (7); delivers to (10).

10. Two automatic samplers patterned after the "Vezin" type, except that the cones are inverted so that the sample drops through the rim to the outside of the pan or inverted cone, and the main stream passes on through an opening in the bottom. Cuts out 5% of the ore. From (9) of both units; deliver total samples, via screw conveyor, to (11) and reject to (13).

11. Automatic sampler like (10). Cuts out 5%. From (10); delivers sample, via barrel-type mixer, to (12) and reject to (13).

12. Automatic sampler like (10). Cuts out 5% or 0.25 pound of ore per ton milled. From (11); delivers sample to assayer and reject to (13).

13. Two portable 24-inch conveyors 150 feet long and reversible, as to travel of belts and frames, so as to discharge at any point over (14). Frames run on 2 tracks. From (10), (11), and (12); deliver to (14).

14. Crushed-ore bin for both units, 600 feet long by 20 feet wide by 25.5

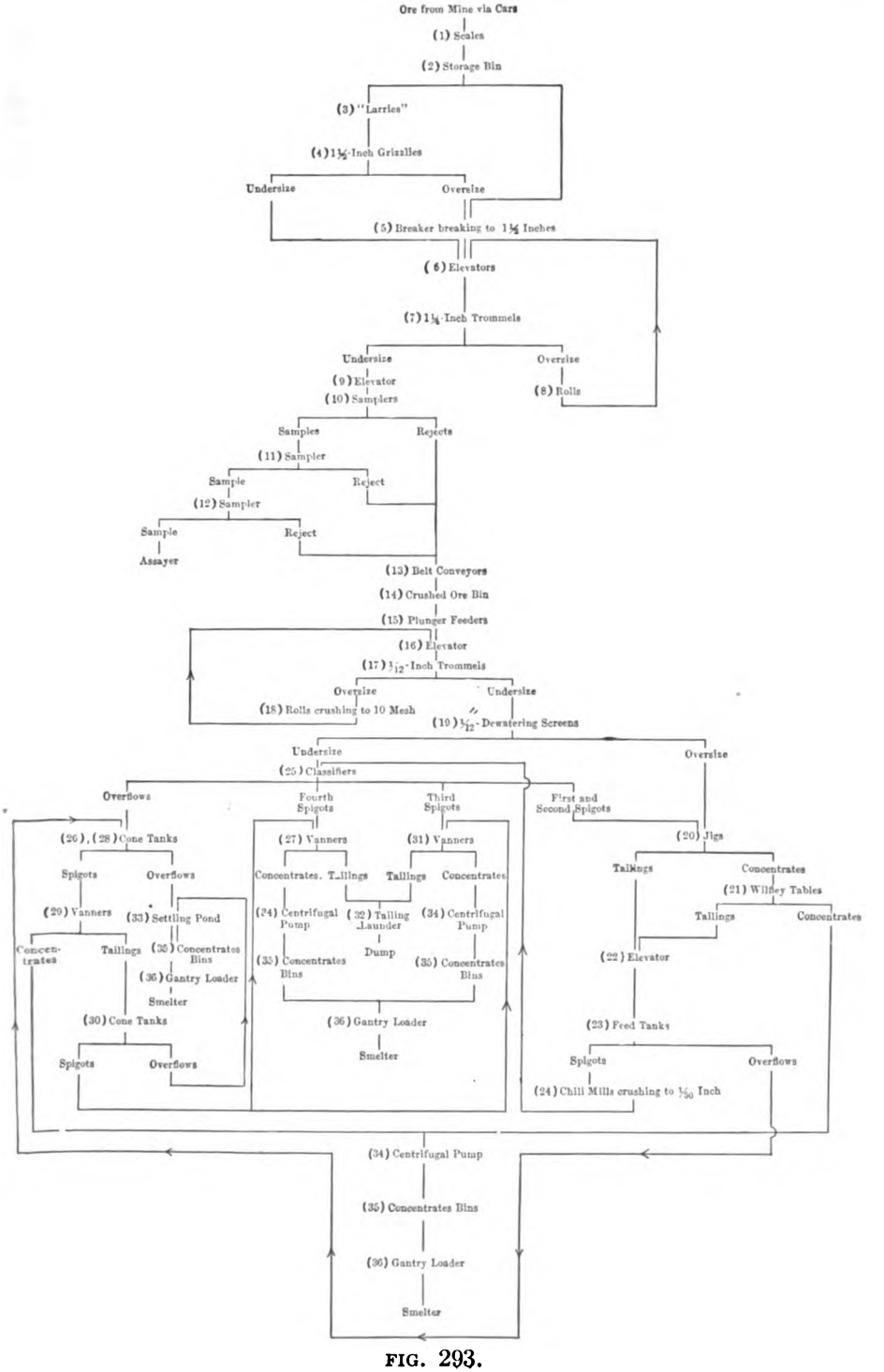
Ore from Mine via Cars
(1) Scales
(2) Storage Bin
(3) "Larries"
(4) 1½-Inch Grizzlies
Undersize
Oversize
(5) Breaker breaking to 1½ Inches
(6) Elevators
(7) 1¼-Inch Trommels
Undersize
Oversize
(9) Elevator
(10) Samplers
(8) Rolls
Samples
Rejects
(11) Sampler
Sample
Reject
(12) Sampler
Sample
Reject
Assayer
(13) Belt Conveyors
(14) Crushed Ore Bin
(15) Plunger Feeders
(16) Elevator
(17) ½-Inch Trommels
Oversize
Undersize
(18) Rolls crushing to 10 Mesh
(19) ½-Dewatering Screens
Undersize
Oversize
(25) Classifiers
Overflows
Fourth Spigots
Third Spigots
First and Second Spigots
(26), (28) Cone Tanks
(27) Vanners
(31) Vanners
(20) Jigs
Spigots
Overflows
Concentrates. Tailings
Tailings
Concentrates
Tailings
Concentrates
(21) Wilfley Tables
(29) Vanners
(33) Settling Pond
(24) Centrifugal Pump
(32) Tailing Launder
(34) Centrifugal Pump
Tailings
Concentrates
Concentrates
Tailings
(35) Concentrates Bins
Dump
(22) Elevator
(36) Gantry Loader
(33) Concentrates Bins
(35) Concentrates Bins
Smelter
(30) Cone Tanks
(36) Gantry Loader
(23) Feed Tanks
Spigots
Overflows
Smelter
Spigots
Overflows
(24) Chili Mills crushing to ½₀ Inch
(34) Centrifugal Pump
(35) Concentrates Bins
(36) Gantry Loader
Smelter

FIG. 293.

feet deep. Bottom hoppered longitudinally. Bin has a total capacity of 15,000 tons and is divided into halves for each unit. From (13); delivers via gates, 11 inches square, to (15).

One Section Only.

15. Two automatic plunger feeders with plungers, 7 × 9 inches, double acting and operated by eccentrics. Supported by guide rods, the plungers work freely, in a 9 × 11-inch box, with a variable stroke of 4 inches, more or less, and the eccentric makes 40 revolutions per minute. From (14); deliver to (16).

16. Twenty-four inch elevator having a speed of 360 feet per minute, buckets, 8 × 24 inches, and elevating the ore 54 feet. From (15) and (18); delivers to (17).

17. Four trommels, 3.33 × 7.5 feet, with rolled-slot wire-cloth screens having 0.088-inch openings, slopes of 1.125 inches to the foot, and making 22 revolutions per minute. From (16); deliver oversize to (18) and undersize to (19).

18. Rolls, 15 × 37.5 inches, crushing to about 10 mesh and making 80 revolutions per minute. From (17); deliver crushed ore to (16).

19. Two dewatering screens, 4.66 feet long by 2.33 feet wide, with rolled-slot wire-cloth screens having 0.088-inch openings and slopes of 45°. From (17); deliver oversize to (20) and undersize to (25).

20. Six 2-compartment jigs with 20 × 30-inch sieves having slotted holes 0.088-inch wide and plungers making 140 0.75-inch strokes per minute. From (19) and (25); deliver both hutch products to (21) and tailings to (22).

21. Four Wilfley tables making 245 0.875-inch throws per minute. From (20); deliver concentrates to (34), middlings and tailings to (22).

22. Twenty-four inch elevator having a speed of 400 feet per minute, buckets, 8 × 24 inches, and elevating the ore 58 feet. From (20) and (21); delivers to (23).

23. Three sheet-steel cylindrical feed tanks, 10 feet in diameter and 8 feet high. From (22); deliver spigots to (24) and overflows to (28).

24. Three Garfield 6-foot Chili mills with rolled-slot wire-cloth screens having 0.027-inch openings. From (23); deliver pulp to (25).

25. Two 4-spigot classifiers each having four expanding hoppers. From (19) and (24); deliver first and second spigots to (20), third spigots to (31), fourth spigots to (27), and overflows to (26) and (28).

26. Ten cone tanks, 9.5 feet in diameter with 60° slopes. From (25); deliver spigots to (29) and overflows to (33).

27. Twenty Johnston vanners with corrugated belts, 6 feet wide, and making 130 2-inch throws per minute. From (25) and (30); deliver concentrates to (34) and tailings to (32).

28. Sixteen cone tanks, 7 feet in diameter with 60° slopes. From (23) and (25); deliver spigots to (29) and overflows to (33).

29. Forty Johnston vanners with smooth belts, 6 feet wide, and making 120 2-inch throws per minute. From (26) and (28); deliver concentrates to (34) and tailings to (30).

30. Ten cone tanks, 9.5 feet in diameter with 60° slopes. From (29); deliver spigots to (27) and (31), and overflows to (33).

31. Thirty-two Johnston vanners with corrugated belts, 6 feet wide, and making 130 2-inch throws per minute. From (25) and (30); deliver concentrates to (34) and tailings to (32).

32. Tailings launder and automatic sampler which consists of a cutter swinging across the entire width, and at the end, of the launder. This cut

is made every 6 minutes and takes out 5% of the stream during the time that the cut is actually being made. The actual sample taken is 1.2 pounds per ton of ore treated and this sample is still further reduced by a rotating cutter, which takes a second sample of 3% from the first sample. From (27) and (31); delivers to tailings dump.

33. Settling pond for concentrates-bin overflow. From (26), (28), (30), and (35) (not shown in cut); delivers periodically to (35).

34. Centrifugal pump. From (21), (27), (29), and (31); delivers, via launder, to (35).

35. Ten concrete concentrates bins, 23 feet long by 15 feet wide by 11 feet deep, having a drainage through bottoms to (33) and overflows, by launders, from any bin to any other. From (33) and (34); deliver to (36) and drainage to (33) (not shown in cut).

36. Gantry clam shells load concentrates from (35) into cars, whence they go to the smelter of the Garfield Smelting Company at Garfield.

An approximate analysis of the crude ore and products follows:

	Crude.	Concentrates.	Tailings.
Copper	2.00 percent.	25 to 30 percent.	0.43 percent.
Silica	67.00 "	20 to 23 "	.....
Iron	2.50 "	17 to 20 "	.....
Lime	0.25 "	.....	.....
Molybdenum	.....	1.50 percent.	.....
Gold	.....	$5.00 per ton.	.....
Silver	.....	1.5 to 3 ounces per ton.	.....

The ores treated by the Utah Copper Company, the Boston Consolidated Copper Company, and the Steptoe Valley Smelting and Mining Company are all similar as regards economic minerals, gangue, and the size of mineral particles. The methods of crushing and concentrating vary at these three mills. The Utah Copper Company crushes with rolls and Chili mills and concentrates with jigs, Wilfley tables, and Johnston vanners. The Boston Consolidated Copper Company crushes with Nissen stamps and concentrates with Wilfley tables and Johnston vanners. The Steptoe Valley Smelting and Mining Company crushes with Huntington mills and concentrates with jigs and Wilfley tables. It will be interesting to watch the results at these three mills, using, as they do, different methods of concentration.

Labor and Wages.

The mill runs 7 days a week and 3 shifts per day. The base scale for operators of machinery is $2.50 per 8-hour shift. Ordinary labor about the mill receives from $2 to $2.25 for the same length shift. Higher classed labor, such as the mechanical force, receive various higher rates, so that the average rate paid to all operators and employees is about $2.60.

Power Plant.

The building is of steel and brick, with an engine room about 290 feet long by 73 feet wide, in which are located two Allis-Chalmers compound-condensing steam engines, furnishing 1,250 kilowatts each, and three Nordberg compound-condensing steam engines, furnishing 2,000 kilowatts each, a total of 8,500 kilowatts.

There are 20 Heine boilers of 410 horse-power each, nominal rating, and carrying 175 pounds of steam. These are fired by two American stokers for each boiler and use artificial draft furnished by Buffalo fans. A 50 horse-

power Ames automatic single-cylinder engine drives the stokers, and the coal, delivered in bins over the boilers, discharges into the stokers through 12-inch pipes.

The primary voltage of the generator is 4,000 volts, and a 42,000-volt current is sent over to Bingham, 17 miles distant.

The total mill will require from 4,000 to 5,000 horse-power and of the 1,050 horse-power will be required in pumping water to a height of 200 feet. The mine will require 500 horse-power, and the Copperton mill, of 800 tons capacity, about 1,000 horse-power.

Pumping Equipment.

There are three 2-stage centrifugal pumps (D'Olier Engineering Company, Philadelphia, Pa.). No. 1 pumps 2,500 gallons per minute and is run by a 250 horse-power, 4,000-volt induction motor. No. 2 pumps 3,500 gallons per minute and is run by a 350 horse-power, 4,000-volt induction motor. No. 3 pumps 4,500 gallons per minute and is run by a 450 horse-power, 4,000-volt induction motor.

One ton of ore requires 6 tons of water, or 1 gallon per minute per ton in 24 hours.

The vanners used are modeled after the Johnston suspended vanner as manufactured by the Risdon Iron Works. It has been found, by experiments, that the corrugated vanner belts make a better recovery with a coarse feed than the smooth vanner, and vice versa with the fine feed.

The rolls and Chili mills were built after the design of the Engineering Department of the company. The object in using such coarse screens in the Chili mills is to save sliming and wear, and increase the capacity.

Mr. Jackling believes in using flanged belt conveyors when the belt is to run up a steep incline; but on level work he thinks a perfectly flat belt, a little wider than absolutely necessary, is proper. He does not believe in using a narrow belt and turning up the edges with pulleys, rollers, etc. It will be noticed that graded crushing is carried to the extreme in this mill.

Costs in the Utah District.

The average cost of mining copper-sulphide ore bodies at Bingham, Utah, is given in Table 135; this includes two methods of mining concentrating, and one method of mining smelting ores.

TABLE 135. — AVERAGE COST OF MINING SULPHIDE ORE BODIES AT BINGHAM, UTAH.

	Smelting Ores. Mining by Square-setting and Filling. Per Ton.	Concentrating Ores.	
		Top Slice Caving System. Per Ton.	With Steam Shovels. Per Ton.
Exploration work and stripping	$0.15	.....	$0.05
Stoping including timbering and filling { Labor	1.01	0.50	0.10
Stoping including timbering and filling { Supplies	.....	0.10	0.05
Tramming to ore bins	0.15	.....	.....
Power and light	.....	0.04	.....
Surface expenditures, improvements, etc.	0.04	.....	.....
Engineering and assaying	0.02	0.01	0.01
Salaries and general expense	0.13	0.04	0.04
Development	0.10	0.03	.....
Total mining	$1.60	$0.72	$0.25

Table 136 gives the average cost of milling concentrating ores in Bingham, Utah.

TABLE 136. — AVERAGE GENERAL MILLING COSTS AT BINGHAM, UTAH.

	Per Ton.
Labor	$0.25
Supplies	0.10
General expense	0.05
Power and light	0.20
Total milling	$0.60

§ 663. CONCENTRATOR NO. 6 OF THE ARIZONA COPPER COMPANY, LIMITED, MORENCI, ARIZONA. — The capacity of this mill, which is given to show the modern practice on Arizona copper ores and is shown diagrammatically in Fig. 294 is about 700 tons per 24 hours. The company has five other concentrators in operation, the capacity of each varying from 200 to 400 tons per 24 hours. The economic mineral, chalcocite, is finely disseminated through a siliceous gangue. The ore runs about 3.25% in copper with slight values of gold and silver present. Some oxide and carbonate copper minerals are also present. The problem is to save the copper. The ore, loaded into cars at the mine, runs automatically on a trestle and is delivered to (1).

1. Four 250-ton cylindrical steel bins, 31.25 feet high by 15.83 feet in inside diameter. The circular steel shells rest on, and are anchored to, octagonal concrete foundations which also act as bottoms. From the mine cars; deliver, via hoppers, to (2).

2. One of two coarse-ore shaking feeders of the swinging type operated by a Wilfley motion and making 100 1.75-inch throws per minute. Has a slope of 3.75 inches to the foot. From (1); delivers to (3).

3. One of two Blake-type Farrel breakers with an 18 × 36-inch jaw opening, making 250 thrusts per minute and breaking to three inches. From (2); delivers crushed ore to (4).

4. One of two bumping feeders of the suspended type operated by a revolving cam at 118 throws per minute. From (3); delivers to (5).

5. One of two Chalmers and Williams Cornish-type rolls, 16 × 42 inches, making 73 revolutions per minute and crushing to 1.25 inches. From (4); delivers crushed ore to (6).

6. One 18-inch horizontal Stephens-Adamson belt conveyor with a conveying length of 44 feet and a speed of 343 feet per minute. From (5); delivers to (7).

7. One 18-inch inclined Stephens-Adamson belt conveyor with a conveying length of 315 feet, a slope of 25°, and a speed of 360 feet per minute. From (6); delivers to (8).

8. One of two 50-ton cylindrical steel bins, each 18 feet high by 9.5 feet in diameter. Timber bottoms, with discharge openings 24 × 30 inches. From (7); delivers to (9).

9. One of two fine-ore shaking feeders of the suspended type operated by a Wilfley motion and making 120 throws per minute. Has a slope of 3.25 inches to the foot. From (8); delivers to (10).

10. Two of three trommels, 4 × 9 feet, each divided into three sections. Two sections have 0.625-inch screens and one has a 1.25-inch screen. Have slopes of 4 inches in 17 feet and speeds of 36 revolutions per minute. From (9) and (14); deliver 0.625 to 0-inch material to (11), 1.25 to 0.625-inch material to (12), and the oversize to (13).

11. One of two 5-compartment Hancock jigs. The first 2.67 compartments have 0.25-inch punched-plate screens and the last 2.33 compartments have

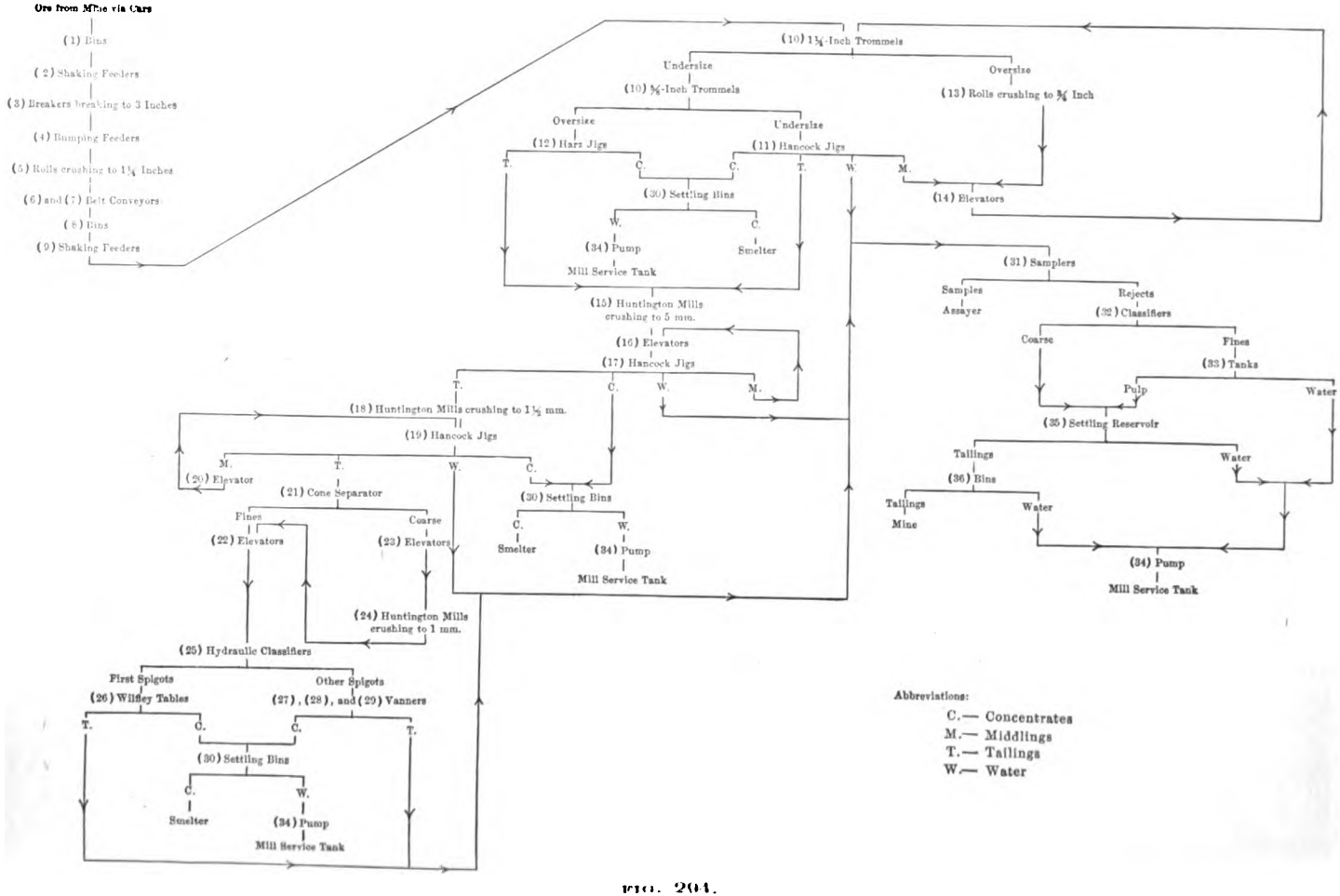
Ore from Mine via Cars
(1) Bins
(2) Shaking Feeders
(3) Breakers breaking to 3 Inches
(4) Bumping Feeders
(5) Rolls crushing to 1¼ Inches
(6) and (7) Belt Conveyors
(8) Bins
(9) Shaking Feeders
(10) 1¾-Inch Trommels
Undersize
Oversize
(13) Rolls crushing to ¾ Inch
(10) ⅝-Inch Trommels
Oversize
Undersize
(12) Harz Jigs
(11) Hancock Jigs
T. C. C. T. W. M.
(14) Elevators
(30) Settling Bins
W. C.
(34) Pump
Smelter
Mill Service Tank
(31) Samplers
Samples
Assayer
Rejects
(32) Classifiers
Coarse
Fines
(33) Tanks
Pulp
Water
(35) Settling Reservoir
Tailings
Water
(36) Bins
Tailings
Mine
Water
(34) Pump
Mill Service Tank
(15) Huntington Mills crushing to 5 mm.
(16) Elevators
(17) Hancock Jigs
T. C. W. M.
(18) Huntington Mills crushing to 1½ mm.
(19) Hancock Jigs
M. T. W. C.
(20) Elevator
(21) Cone Separator
(30) Settling Bins
Fines
Coarse
(22) Elevators
(23) Elevators
C.
Smelter
W.
(34) Pump
Mill Service Tank
(24) Huntington Mills crushing to 1 mm.
(25) Hydraulic Classifiers
First Spigots
Other Spigots
(26) Wilfley Tables
(27), (28), and (29) Vanners
T. C. C. T.
(30) Settling Bins
C.
Smelter
W.
(34) Pump
Mill Service Tank
Abbreviations:
C.— Concentrates
M.— Middlings
T.— Tailings
W.— Water

FIG. 204.

0.5-inch punched-plate screens with three or four 0.625-inch holes in each, 4 × 9-inch pocket in the last of the third compartment and the first of the fourth. The plungers make 175 strokes per minute, and the driving shaft makes 58.33 revolutions per minute. From (10); delivers concentrates to (30), middlings to (14), tailings to (15), and overflow to (31).

12. One of two double-compartment Harz jigs with 0.1875-inch punched-plate screens. The plungers, 2 × 2.75 feet, make 2.125-inch strokes and the eccentric shaft makes 137 revolutions per minute. From (10); delivers concentrates to (30) and tailings to (15).

13. One of two rolls crushing to 0.75-inch and with other details as in (5). From (10); delivers crushed ore to (14).

14. One of two vertical elevators having a belt speed of 358 feet per minute, and buckets, 7 × 14 inches, spaced 21 inches apart, which elevate the ore 38.5 feet. The pulleys are 14 × 36 inches. From (11) and (13); delivers to (10).

15. Three of four special heavy-pattern 6-foot Huntington mills made by Chalmers and Williams. Crush through 5-millimeter screens and make 60 revolutions per minute. The mills are geared three to one and fitted with 12.5 × 34-inch pulleys. Each mill has a capacity of 250 tons per 24 hours. From (11) and (12); deliver pulp to (16).

16. One of two 2-stage inclined elevators, having belt speeds of 377 feet per minute, slopes of 1.5 inches to the foot, and buckets, 9 × 24 inches, spaced 21 inches apart, which elevate the ore 36 and 30 feet or a total of 66 feet. The pulleys are 24 × 36 inches. From (15) and (17); delivers to (17).

17. One of two 5-compartment Hancock jigs. The first 2.67 compartments have 0.1875-inch punched-plate screens and the last 2.33 compartments have 0.25-inch punched-plate screens. The plungers make 175 strokes per minute. From (16); delivers concentrates to (30), middlings to (16), tailings to (18), and overflow to (31).

18. Two of three Huntington mills crushing to 1.5 millimeters and with other details as in (15). From (17); deliver pulp to (19).

19. One of two 5-compartment Hancock jigs. The first 2.67 compartments have 8-mesh copper-wire screens, and the last 2.33 compartments have 3.5-millimeter punched-plate screens. The plungers make 183 strokes per minute. From (18) and (20); delivers concentrates to (30), middlings to (20), tailings to (21), and overflow to (31).

20. One elevator having buckets, 6 × 10 inches, which elevate the ore about 18 feet. Twenty-four inch pulleys are used. From (19); delivers to (19).

21. Cone separator. From (19); delivers coarser material to (23) and finer material to (22).

22. One of two vertical elevators having a belt speed of 358 feet per minute and buckets, 9 × 24 inches, spaced 21 inches apart, which elevate the ore 21.5 feet. The pulleys are 24 × 36 inches. From (21) and (24); delivers to (25).

23. One of two vertical elevators having buckets, 7 × 14 inches, spaced 21 inches apart, which elevate the ore about 14 feet. From (21); delivers to (24).

24. Two Huntington mills crushing through 1-millimeter screens and having other details as in (15). From (23); deliver pulp to (22).

25. Two 4-compartment hydraulic classifiers. From (22); deliver the first spigots to (26), the second spigots to (27), the third spigots to (28), the fourth spigots to (29), and no overflows.

26. Eleven No. 5 Wilfley tables making 249 strokes per minute. From (25); deliver concentrates to (30) and tailings to (31).

27. Eleven 6-foot Frue vanners with corrugated belts making 200 throws per minute. From (25); deliver concentrates to (30) and tailings to (31).

28. Eleven 6-foot Frue vanners with smooth belts making 196 throws per minute. From (25); deliver concentrates to (30) and tailings to (31).

29. Seventeen 6-foot Frue vanners with smooth belts making 200 throws per minute. From (25); deliver concentrates to (30) and tailings to (31).

30. Three of six 100-ton settling bins. From (11), (12), (17), (19), (26), (27), (28), and (29); deliver drained concentrates, via cars, to smelter and water to (34).

31. Automatic samplers. From (11), (17), (19), (26), (27), (28), and (29); deliver samples to assayer and rejects to (32).

32. Classifiers. From (31); deliver coarser material to (35) and finer material to (33).

33. Twenty-four reinforced concrete tanks, each 16 feet deep by 9.5 feet in inside diameter with conical bottoms sloping at 53°. From (32); deliver clear water overflows to (34) and the thickened pulp to (35).

34. Pump. From (30), (33), (35), and (36); delivers to mill service tank.

35. Settling reservoir, 11 feet deep by 130 feet in diameter, divided into four compartments each capable of holding 4,000 tons. Each compartment has a draining system and a filter bottom through which the remaining water is removed. A revolving cantilever crane, in the center of the reservoir, with a 2.5-ton clam-shell bucket, removes the dry tailings. From (32) and (33) delivers dry tailings to (36) and water to (34).

36. Two 150-ton bins, with filter bottoms, located at the foot of a two-track incline of 35°. From (35); deliver tailings, via mine cars, to the mine for filling and the water to (34).

The average saving for the 6 months ending March 31, 1908, was 78%.

The ore is treated successively by three Hancock jigs, and sampling, extending over a period of about 2 months, gave the following average results:

Number (11) Hancock jig, coarse feed					3.54	percent.	copper.
" " " " tailings					1.88	"	"
" (17) " " medium feed					2.13	"	"
" " " " " tailings					1.58	"	"
" (19) " " fine feed					1.64	"	"
" " " " " tailings					1.43	"	"

In each case the feed sample is enriched by the addition of the middlings product which is returned to the jig. During this time the mill showed an extraction of 76% of the total copper and, of this, 54% was taken out by the jig system which includes 3 Hancock jigs and the Harz jig. Allowing 7% for the Harz jig (12), this gives the extraction by the 3 Hancock jigs alone as 47% of the total copper in the ore, or 62% of the copper extracted. This 47% extraction was made up by the three jigs as follows:

Number (11) or coarse Hancock	29.0	percent.
" (17) or middle "	13.0	"
" (19) or fine "	5.0	"
Total	47.0	"

Labor.

The mill runs every day in the year excepting Christmas and July fourth, and regularly employs a total of 92 men per 24 hours on three 8-hour shifts. Both American and Mexican labor is employed per 24 hours as follows: 1 foreman, 2 shift bosses, 1 timekeeper, 2 weighers, 10 rock-house men, 2 rock-house ore pickers, 8 Huntington mill men, 12 vanner and tablemen, 9 men on the tanks and pumps, 4 oilers, 4 engineers, 6 firemen and helpers, 3 trommel men, 9 jig men, 4 men at the concentrates bins, 7 swampers and roustabouts, and 8 repair men.

Power.

There are three 250 horse-power Stirling boilers, set in a steel house. The main engine room is in the mill building itself and contains a 250 horse-power Nordberg cross-compound engine, 12 × 24 × 36 inches, which drives the Hancock jigs, Huntington mills, elevators, and re-crushing rolls. The electrical machinery is driven by another Nordberg engine running at 125 revolutions per minute and direct connected to a General Electric Company, 240-kilowatt, 3-phase, 25-cycle, 440-volt generator which operates the various motors. The lights and crane (which is used in the daytime only) are operated by a high-speed Ball engine direct connected to a 75-kilowatt, 2-phase, 60-cycle, 220-volt generator. Nernst lamps are used throughout the mill.

Costs.

Table 137 gives a summary of the costs of operation at this company's property in 1906.

TABLE 137. — COST PER TON AT THE ARIZONA COPPER COMPANY IN 1906.

Cost working mines (deadwork, ores purchased, leaching, etc.)	$2.50
Smelting, refining and marketing	2.06
General	0.14
Interest and amortization	0.70
Total costs	$5.40

Although the concentrating costs at this plant are not obtainable, Table 138 gives figures on a property handling a similar ore in the same district and in the same manner.

TABLE 138. — CONCENTRATING EXPENSES IN SOUTHWESTERN ARIZONA IN 1907.

Ore Concentrated.	Plant No. 1. 347,019.70 Tons. Per Ton.
Labor	$0.2257
Supplies	0.0175
Crushing	0.0463
Power	0.1734
Water supply	0.0705
Circulating water	0.1130
Re-pumping water	0.0707
Repairs	0.1636
Incidentals	0.0578
Totals per ton	$0.9385

At plant No. 1 during 1907, 347,019.70 tons of dry ore, running 2.9235% in copper, were milled; and 139.75 tons of dry slimes, running 7.0111% in copper, were re-milled. A saving of 79.64% was made, or 51,724.433 tons of dry concentrates, running 15.222% in copper; 1,578.403 tons of dry slimes, running 7.73% in copper; and 293,856.416 tons of tailings, running 0.705% in copper, were the resulting products. The mill ran 92.84% of the total time and 1,024.06 tons were milled per 24 hours of actual running time. 315.83 gallons of water were used per ton milled, or 220.87 gallons per minute.

§ 664. CALUMET AND HECLA MINING COMPANY, CALUMET, MICHIGAN. — The two mills of the Calumet and Hecla are located at Lake Linden on Torch Lake, 5 miles from the mine. One section of the mill handling the conglomerate ore is shown figuratively in Fig. 295 and is given here to show one method of handling Lake Superior copper ores.

The total capacity of both mills is over 8,000 tons per 24 hours, or about

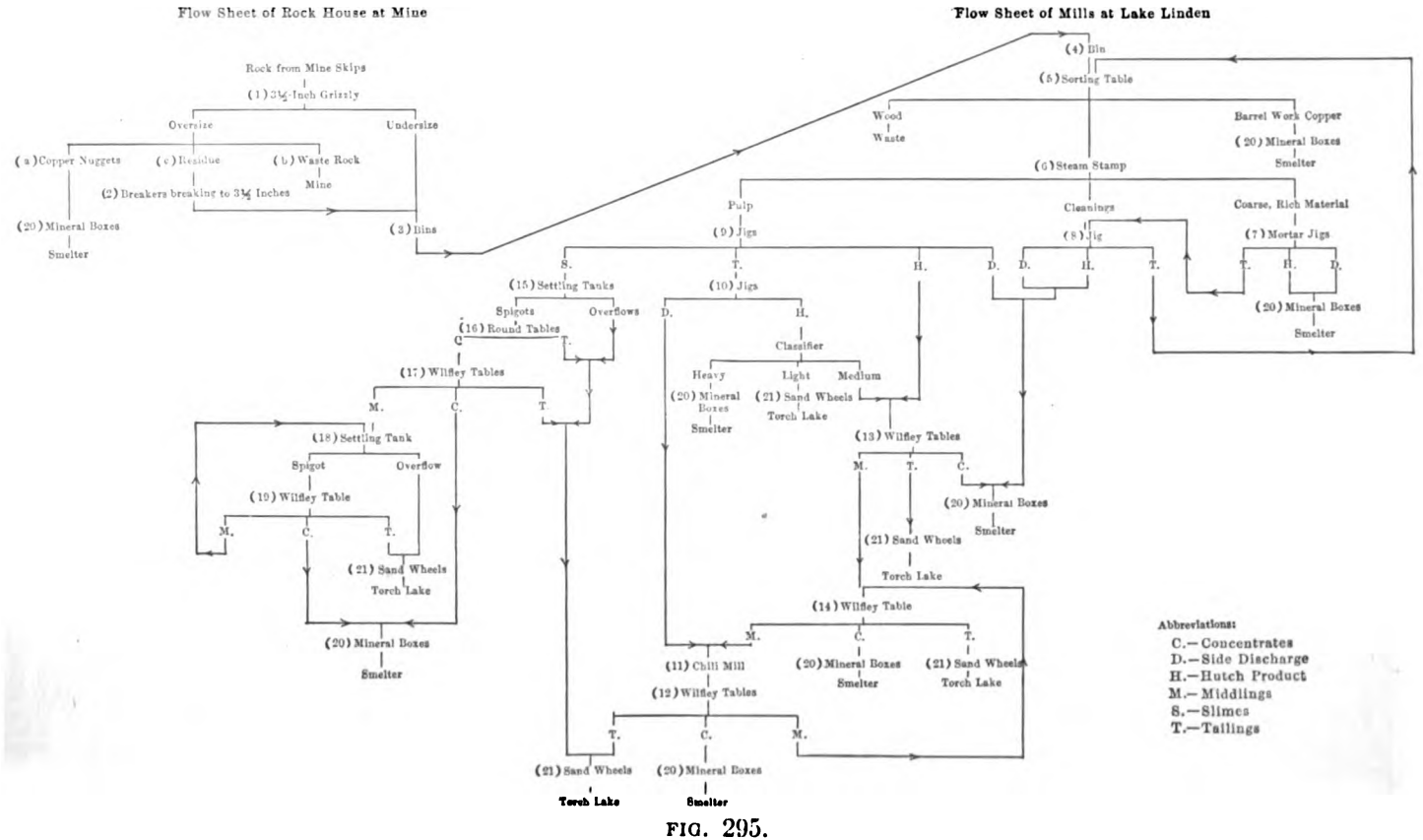
Flow Sheet of Rock House at Mine
Rock from Mine Skips
(1) 3½-Inch Grizzly
Oversize
Undersize
(a) Copper Nuggets
(c) Residue
(b) Waste Rock
Mine
(2) Breakers breaking to 3½ Inches
(20) Mineral Boxes
Smelter
(3) Bins
Flow Sheet of Mills at Lake Linden
(4) Bin
(5) Sorting Table
Wood
Waste
Barrel Work Copper
(20) Mineral Boxes
Smelter
(6) Steam Stamp
Pulp
Cleanings
Coarse, Rich Material
(9) Jigs
(8) Jig
(7) Mortar Jigs
S.
T.
H.
D.
(15) Settling Tanks
Spigots
Overflows
(10) Jigs
(16) Round Tables
C.
T.
Classifier
Heavy
Light
Medium
(17) Wilfley Tables
M.
C.
T.
(20) Mineral Boxes
Smelter
(21) Sand Wheels
Torch Lake
(18) Settling Tank
Spigot
Overflow
(13) Wilfley Tables
(19) Wilfley Table
(21) Sand Wheels
Torch Lake
(14) Wilfley Table
(11) Chili Mill
(12) Wilfley Tables
Abbreviations:
C.—Concentrates
D.—Side Discharge
H.—Hutch Product
M.—Middlings
S.—Slimes
T.—Tailings

FIG. 295.

300 tons per section when treating conglomerate rock, and nearly double this capacity when treating amygdaloid rock. The mills run 24 hours per day, 6 days a week. The rock consists of the economic minerals native copper and a little native silver in a gangue of rhyolite conglomerate carrying a little calcite, epidote, and martite. The problem is to save the copper and silver.

The rock is hoisted from the mine in skips of 10,000 and 15,000 pounds' capacity each and dumped upon (1).

Rock House at Mine.

There is one rock house for each shaft and there are 17 shafts working. Since all are alike in process, only one will be described below.

1. One grizzly with 3.5 inches between the steel bars which are 4 inches in diameter and placed at an angle of 30°. From the mine; delivers oversize, which is hand picked into, (*a*) copper nuggets which go to (20), (*b*) waste rock which goes back to the mine for filling, (*c*) residue which is sent to (2), and undersize to (3).

2. Two Blake breakers, one having a jaw opening 20 × 24 inches and the other 24 × 36 inches, making about 190 thrusts per minute and breaking to 3.5 inches. From (1); deliver crushed rock to (3).

3. Rock-house bins, 40 × 50 feet, and from 10 to 20 feet deep, with flat bottoms and 16 chutes. From (1) and (2); deliver, via sixteen gates, chutes, and railroad cars, to (4).

Mills at Lake Linden.

There are two entirely independent mills, the Calumet and the Hecla, in total having 28 sections, of which, in 1907, there were 22 practically similar sections treating conglomerate rock, and 6 somewhat different from the above, but similar to each other, working on amygdaloid rock. One conglomerate section will be described below:

4. Mill bin with a flat bottom and a capacity of 1,000 tons. From (3); delivers to (5).

5. One assorting table, 3 × 7.5 feet, making 65 strokes per minute. From (4) and (8); delivers to (6) while barrel work copper is picked and goes to (20) and wood is picked and goes to waste.

6. One Leavitt steam stamp using inclined 4-sided screens with 4.76-millimeter round holes and equipped with mortar jigs (7). From (5); delivers pulp, via distributor, to (9), coarser and richer material to (7), and mortar cleanings, every fourth day, to (8).

7. Two mortar jigs which consist of two openings in the side of the mortar of (6), each about 1.5 × 12 inches, at the lower edge of the screen. Each opening leads down to a sieve below with holes 25 millimeters in diameter and 4 × 12-inch dimensions. The sieves have connections with jigging plungers, 8 inches in diameter, making 195 2-inch strokes per minute, which subject the material on the sieves to a regular jigging action, the hutch work and sieve discharges being discharged intermittently by a series of levers and pockets. From (6); deliver skimmings off screens and hutch work to (20) and tailings, or cover work, to (8).

8. One 1-compartment Woodbury-Benedict jig for 11 sections. From (6) and (7); delivers discharge and hutch work to (20) and tailings to (5).

9. Two 2-compartment Woodbury-Benedict jigs having a capacity of 250 tons per 24 hours on feed carrying about 40% slimes. All screens have 10 meshes to the inch and in the first compartments are 24 × 36 inches, in the second 30 × 50 inches. The plungers in the first compartments are 12 × 24 inches and make 195 0.875-inch strokes per minute, while the plungers in the

second compartments are 12 × 50 inches and make 195 0.75-inch strokes per minute. From (6); deliver discharges to (20); hutch work to (13); slimes, by special contrivance, to (15); tailings, via distributors, to (10).

10. Two 3-compartment Woodbury-Benedict jigs having a capacity of about 150 tons per 24 hours. The plungers are all 12 × 50 inches and make 195 strokes per minute, varying in length from 0.5 inch in the first to 0.375 inch in the third compartments. The screens are all 30 × 50 inches and have 12 meshes to the inch. The tail height is 2.625 inches. From (9); deliver discharges and skimmings to (11); hutch work, via hydraulic classifiers, to (13), the classifiers making concentrates which go to (20) and tailings which go to (21).

11. One 6-foot Chili mill of the Calumet and Hecla type making 29.5 revolutions per minute, crushing through 16-mesh diagonal needle-slot screens and having a capacity of 35 tons on conglomerate rock and 50 tons on amygdaloid rock per 24 hours. From (10) and (14); delivers pulp to (12).

12. Two Wilfley tables. From (11); deliver concentrates to (20), middlings to (14), and tailings to (21).

13. Two Wilfley tables. From (9) and (10); deliver concentrates to (20), middlings to (14), and tailings to (21).

14. One Wilfley table. From (12) and (13); delivers concentrates to (20), middlings to (11), and tailings to (21).

15. Two settling tanks, 5 feet wide by 9 feet long, handling together 125 tons of slimes per 24 hours. From (9); deliver spigots to (16) and overflows to (21).

16. Two 4-deck Evans slimes tables, 16 feet in diameter, having speeds of 1 revolution in 57 seconds, slopes of 1.5 inches to the foot, and a capacity of from 14 to 18 tons per 24 hours. From (15); deliver concentrates to (17) and tailings to (21).

17. Four Wilfley tables. From (16); deliver concentrates to (20), middlings to (18), and tailings to (21).

18. One settling tank. From (17) and (19); delivers spigot to (19) and overflow to (21).

19. One Wilfley table. From (18); delivers concentrates to (20), middlings to (18), and tailings to (21).

20. Mixing boxes. Three grades of concentrates in addition to barrel-work copper are kept separate from each other and from each mill. The concentrates in (20) averaged about 60% copper in 1907. From (1), (5), (7), (8), (9), (10), (12), (13), (14), (17), and (19); deliver, via cars, to smelter.

21. Five sand wheels for both mills. From (10), (12), (13), (14), (15), (16), (17), (18), and (19); deliver over 8,000 tons per 24 hours through a launder, on a high trestle, into Torch Lake.

The amygdaloid practice differs from the conglomerate chiefly in the crushing. In this practice (6) is provided with 15.9-millimeter openings, 1 mortar jig (7), and 1 plain hydraulic discharge. The pulp from the mortar is screened through 2 trommels having either 4.76 or 6.35-millimeter holes, the undersize going to (9), and from that point on much as described under the method of treating conglomerate rock. The oversize goes to two Woodbury-Benedict bull jigs with 15 × 50-inch plungers making 180 1.75-inch strokes per minute, which deliver cup concentrates to (20); hutch products to (13); and tailings, which are returned by an elevator, either to (6) or to a set of rigid rolls, 16 × 36 inches, whose crushed product goes back to the trommels with the material from (7). Moreover, in the amygdaloid practice, the Evans tables (16) are omitted and the plug discharges from (15) go directly to eight Wilfley tables (17).

Some of the Wilfley tables are 6 feet wide at the head end, but most of them are 7. The speeds vary from 235 to 245 thrusts per minute, the length of strokes

from 0.625 to 0.875 inch, and the capacities from as low as 8 tons on fines to as high as 18 tons on the coarser material per 24 hours.

The power consumed is about 30 horse-power per section. Water consumed is about 1,250,000 gallons per 24 hours for a conglomerate section, and 2,000,000 gallons for an amygdaloid section excluding that used for condensing purposes.

In addition to the above equipment there is under construction (Jan 1, 1908) additional machinery for treating the present tailings from the richer portions of the conglomerate rock and the rich tailings of former years. To further treat the slimes there have been installed for each section 8 Calumet tables, a reciprocating table of the Wilfley type without the diagonal termination of the riffles. These tables will handle the tailings of (16), deliver tailings to (21) and concentrates to be further treated on a Wilfley table, 16 Calumet tables supplying concentrates to one Wilfley. For further treatment of the coarser tailings there has been erected a re-grinding plant. This takes the tailings from (10) and (13). It consists of 48 Chili mills which will grind through 20 or 24 meshes to the inch, the product of which, after classification, will be treated on 136 Wilfley tables. The capacity of this plant will be from 1,200 to 1,500 tons per 24 hours.

The rock is treated in the following proportions:

73 percent. of the rock treated comes from the Calumet Conglomerate.
26 percent. of the rock treated comes from the Osecola Amygdaloid.
1 percent. of the rock treated comes from the Kearsarge Amygdaloid.

The Calumet conglomerate is the hardest and the Osceola Amygdaloid the softest rock in the district.

In 1905 the cost of making metallic copper at this plant was about 7 cents a pound. Tests have been conducted with a Nordberg steeple-compound stamp head, and it was found capable of treating 375 tons of Calumet conglomerate or 600 tons of Osceola amygdaloid per day.

The mill gives out no analysis. The rock formerly ran about 4% copper, but is now running somewhat less than one-half of this amount.

Sand Wheels.

There are two sand-wheel houses, one for each mill. The Calumet wheel house has two sand wheels of 50 feet nominal diameter; the Hecla wheel house has three sand wheels of 40, 50, and 60 feet nominal diameters. The 60-foot sand wheel is situated in a 3-story steel annex. It weighs 300 tons, is 12 feet wide, and is mounted on massive concrete foundations.

The axle weighs 21 tons, is 26.5 feet long, and 30 inches in diameter, with a 16-inch diameter hole through it. The axle revolves in cast-iron pedestals supported by heavy cast-iron bed plates weighing 240 tons. The rim is made up of 20 segments, each supported by two radial steel spokes 3.875 inches in diameter. There are 544 buckets placed in pairs at equal distances around the inside periphery of wheel. Each bucket is 4 inches wide by 4.25 feet long and holds 27 gallons, making the capacity of the wheel 14,700 gallons per revolution. The wheel is driven by gear and pinion from a 700 horse-power motor.

Upwards of 30,000,000 tons of tailings carrying from 0.4 to 1% of copper are in Torch Lake. There is probably about 200,000 tons of copper in this amount of tailings.

Water.

Water is supplied by four steam-driven crank and fly-wheel pumps and 1 motor-driven centrifugal pump. The Michigan is the most powerful of the

former type, with a capacity of 60,000,000 gallons in 24 hours. The Arcadian, Ontario, and Huron have a capacity of 20,000,000 gallons each and the centrifugal pump of 2,750,000 gallons in 24 hours or a total of 122,750,000 gallons of water in 24 hours.

Boiler Plant.

The old boiler plant consists of 22 locomotive boilers, of which 14 are in constant use. There are five 500, thirteen 300, and fourteen 250 horse-power boilers, making a total generating capacity of 7,400 horse-power.

A new boiler plant of 10,000 horse-power of Babcock and Wilcox boilers will shortly go into operation.

The daily consumption averages 240 tons, and 500,000 gallons of water per day are used in these boilers coming from reservoirs, artesian wells, and Torch Lake.

The buildings are built of steel with corrugated iron sides, Carey roofing, and cement floors resting on concrete foundations.

Electric Power Plant.

The boiler house at the stamp mills also furnishes steam for the Electric Power Plant of 8,000 kilowatts' capacity. There are three 2,000-kilowatt General Electric generators direct connected to three Leavitt 3-cylinder compound engines running at 107 revolutions per minute and generating current at 13,200 volts potential, also two 1,000-kilowatt General Electric generators, one direct connected to an Allis-Chalmers twin steeple-compound engine, the other connected by a rope drive to a Leavitt triple-expansion engine, both generating at a pressure of 440 volts. All are alternating-current, 25-cycle machines.

This electric power is used to drive all stamp-mill machinery and the sand wheels, and is transmitted to the mine at a potential of 13,200 volts, where it is stepped down to 2,300 volts, and used to drive the rock-house and shop machinery and for mine pumping and lighting purposes.

Costs.

The costs at this property are said to be about as given in Table 139.

TABLE 139 — ESTIMATED COSTS AT THE CALUMET AND HECLA MINE.

	Amygdaloid.	Conglomerate.
Yield per ton of rock in pounds		42.
General expense per ton of rock stamped	$0.22	$0.22
Underground and rock-house expense per ton stamped	1.10	1.60
Transportation to mill and stamping, per ton	0.40	0.55
Smelting, refining, and marketing, per ton stamped	0.25	0.50
Total per ton of rock stamped	$1.97	$2.87

§ 665. THE TRIMOUNTAIN MINING COMPANY, COPPER RANGE CONSOLIDATED COMPANY, TRIMOUNTAIN, MICHIGAN. — The mill of this company is situated at Beacon Hill, two miles west of Redridge, and is given here to illustrate a second method of handling the Lake Superior copper ores. Together with the pump and boiler houses it occupies a 133.5-acre mill site which has a mile frontage on Lake Superior. The mill building, 210 feet long and 178 wide, is constructed of steel and has stone foundations. It contains 4 Nordberg steeple-compound stamps for crushing the rock, and a complete equipment

of jigs, classifiers, tables, etc., to concentrate the crushed rock. The pump house is built of Portage Entry Sandstone and has a steel trussed roof. The rock treated is the Baltic amygdaloid containing the economic mineral native copper. The problem is to save the copper.

Only one of the four similar stamp sections will be described below, see Fig. 296. Rock from the mine is delivered to (1).

1. Stamp feeder. Receives rock from the mine broken to 3.5 inches and finer, and delivers 525 tons of rock per 24 hours, together with 12,150 gallons of water, to (2).

2. One Nordberg steeple-compound stamp provided with a hydraulic mortar discharge and a 2-way screen discharge. The cylinders are 15.5 and 32 inches in diameter and the piston makes 104 24-inch strokes per minute. It crushes 653 tons of rock per 24 hours through 0.625-inch round holes punched staggered, with 0.875 inch between centers, in open-hearth, high-carbon steel plate, 0.1875 inch thick. These plates, when tempered, have an average life of 218.40 days, and, when untempered, of 77.75 days.

The weight of moving parts going into the blow is 7,860 pounds, which is made up as follows: Low-pressure piston, 1,115 pounds; high-pressure piston, 400 pounds; distance sleeve, 480 pounds; piston rod, 775 pounds; stamp-shaft bonnet, 445 pounds; stamp shaft, 3,800 pounds; and chilled cast-iron shoe, 845 pounds. The mortar and anvil blocks weigh 100 tons and are on concrete foundations. This requires 262 indicated horse-power, and 76,845 gallons of water per 24 hours in addition to 129,984 gallons per 24 hours in the hydraulic discharge. Weight and life of mortar linings and wear per ton of rock stamped are as follows:

	Weight New, Pounds.	Weight Old, Pounds.	Life in Days.	Pounds Worn off per Ton of Rock Crushed.
Hopper liners, hard cast iron	600.0	197.0	195.9	0.0039
Urn " " " "	225.0	102.0	58.4	0.0041
Top " " " "	487.0	280.0	201.8	0.0020
Grate frames, gray " "	1,749.0	384.0	138.3	0.0193
Stave liners, chilled " "	2,826.0	1,809.0	344.5	0.0057
Mortar dies " " "	798.0	415.0	222.0	0.0034
Stamp shoes " " "	846.0	499.0	12.7	0.0534
Stamp shaft, acid open-hearth steel	3,800.0	2,903.0	626.0	0.0016

From (1), (4), and (28); delivers mortar discharge, as No. 1 mineral; and pulp from screen discharge, via 2 launders, to (3).

3. Two single-spigot hydraulic classifiers having 0.625-inch holes. Each handles 326.5 tons of rock and requires 57,549 gallons of hydraulic water per 24 hours. From (2); deliver spigots, as No. 1 mineral; and overflows to (4).

4. Two conical trommels having 0.25-inch round holes, punched staggered, 0.406 inch between centers, in open-hearth, high-carbon steel plate 0.0625 inch thick. This plate has an average life, when tempered, of 71.3 days; when untempered, of 59.8 days, and when of rolled saw-plate, of 104 days. From (3); deliver 128 tons per 24 hours of oversize running 0.32% in copper, via elevator, to (2) and undersize to (5).

5. Two single-spigot hydraulic classifiers with 0.25-inch holes. From (4); deliver spigots, as No. 1 mineral; and overflow to (6).

6. Six 4-spigot hydraulic classifiers. The first two spigots are 0.75-inch pipes and the last two of 0.5-inch pipes; the first and third being worn while the second and fourth are new. Two hundred and eighteen thousand six hundred and thirty-four gallons of hydraulic water per 24 hours are added to the first spigots and 19,084 gallons of water are discharged with the pulp;

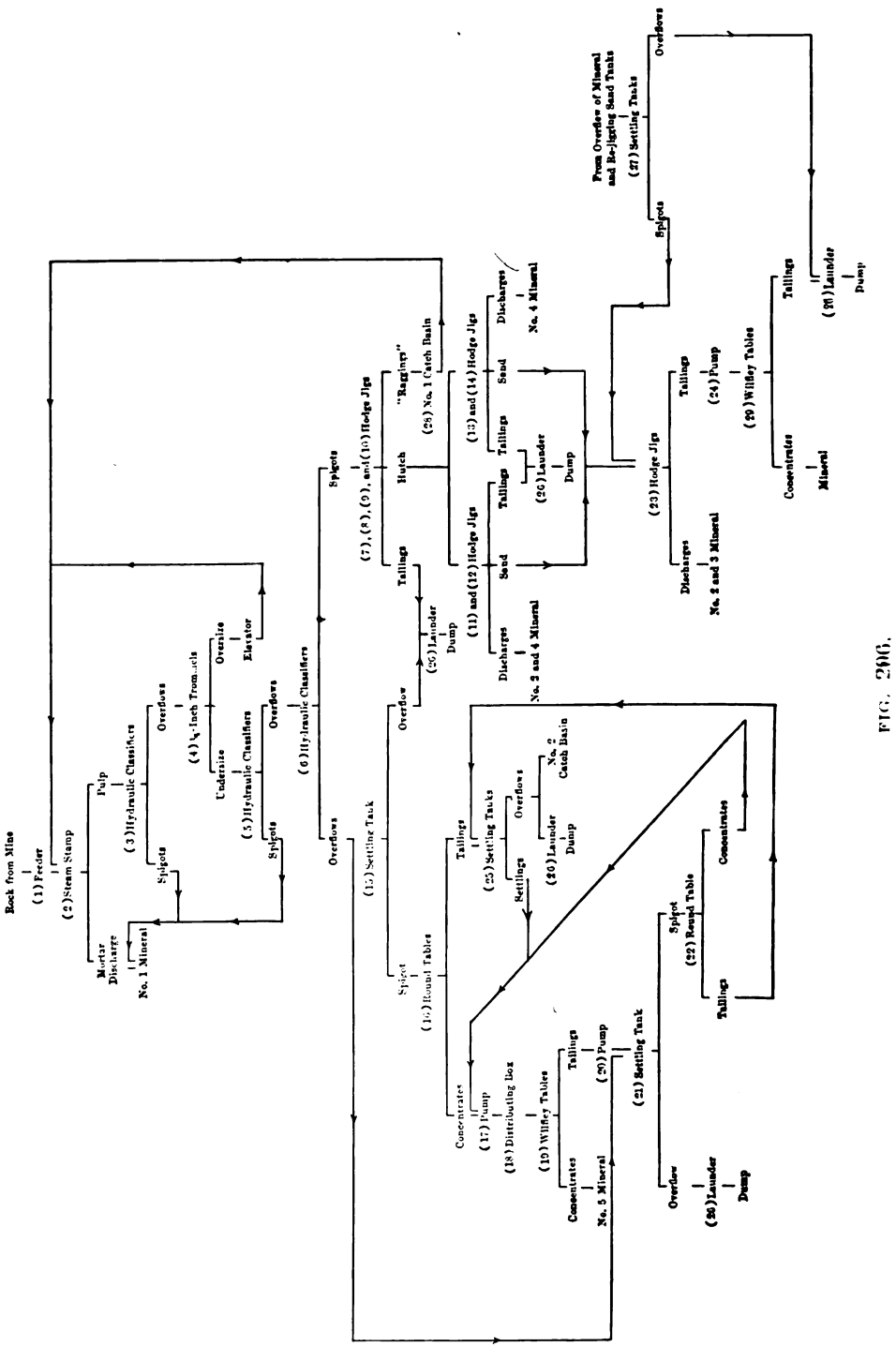
Rock from Mine
(1) Feeder
(2) Steam Stamp
Mortar Discharge
Pulp
No. 1 Mineral
(3) Hydraulic Classifiers
Spigots
Overflows
(4) ¼-Inch Trommels
Undersize
Oversize
(5) Hydraulic Classifiers
Spigots
Overflows
Elevator
(6) Hydraulic Classifiers
Overflows
Spigots
(7), (8), (9), and (10) Hodge Jigs
Tailings
Hutch
"Raggings"
(29) No. 1 Catch Basin
(11) and (12) Hodge Jigs
Discharges
Sand
Tailings
(26) Launder
Dump
(13) and (14) Hodge Jigs
Tailings
Sand
Discharges
No. 4 Mineral
No. 3 and 4 Mineral
(15) Settling Tank
Overflow
(35) Launder
Dump
Spigot
(16) Round Tables
Concentrates
(17) Pump
(18) Distributing Box
(19) Wilfley Tables
Concentrates
Tailings
No. 5 Mineral
(30) Pump
(21) Settling Tank
Overflow
(36) Launder
Dump
Tailings
(25) Settling Tanks
Overflows
Settlings
(20) Launder
Dump
No. 2 Catch Basin
Spigot
(22) Round Table
Concentrates
Tailings
From Overflow of Mineral and Re-jigging Sand Tanks
(27) Settling Tanks
Overflows
Spigots
(23) Hodge Jigs
Tailings
Discharges
No. 2 and 3 Mineral
(24) Pump
(28) Wilfley Tables
Tailings
Concentrates
Mineral
(31) Launder
Dump

FIG. 291.

267,078 gallons of hydraulic water are added to the second spigots per 24 hours, and 19,278 gallons of water are discharged with the pulp. One hundred and eighty-seven thousand six hundred and ninety-eight gallons of hydraulic water per 24 hours are added to the third spigots, and 14,933 gallons of water are discharged with the pulp. One hundred and sixty-eight thousand one hundred and seventy-four gallons of hydraulic water per 24 hours are added to the fourth spigots, and 8,042 gallons of water are discharged with the pulp. Handle 525 tons of rock. The first spigots discharge 132 tons per 24 hours which runs 1.84% in copper and represents a loss of 0.28%; the second spigots discharge 96 tons per 24 hours which runs 0.83% in copper and represents a loss of 0.26%; the third spigots discharge 54 tons per 24 hours which runs 0.73% in copper and represents a loss of 0.25%; the fourth spigots discharge 36 tons per 24 hours which runs 0.63% in copper and represents a loss of 0.20%; and the overflows carry 207 tons of rock per 24 hours. From (5); deliver the first spigots to (7), second spigots to (8), third spigots to (9), fourth spigots to (10), and overflows to (15) and (21).

7. Six 2-compartment Hodge jigs with brass wire-cloth sieves, 24 × 36 inches. The head sieves of 8 mesh, 18 wire, and 3 inches deep, have a life of 324 days. The tail sieves of 10 mesh, 20 wire, and 3 inches deep, have a life of 405 days. The plungers, 12 × 36 inches, make 160 strokes per minute. The length of stroke in the head sieves is 1 inch and in the tail sieves 0.875 inch. The head sieves require 138,636 gallons and the tail sieves 113,328 gallons of water per 24 hours. From (6); deliver 6.96 tons from (7), (8), (9), and (10) of discharges per 24 hours, running 2.1% in copper, as "raggings," to (28); 24.12 tons of hutch products running 1.83% in copper, representing a loss of 0.57%, and 23,549 gallons of water per 24 hours, to (11); and tailings to (26).

8. Six 2-compartment Hodge jigs with brass wire-cloth sieves, 24 × 36 inches. The head sieves of 10 mesh, 20 wire, and 3 inches deep, have a life of 405 days. The tail sieves of 12 mesh, 21 wire, and 3 inches deep, have a life of 540 days. The plungers, 12 × 36 inches, make 160 strokes per minute. The length of stroke in the head sieves is 0.875 inch and in the tail sieves 0.8125 inch. The head sieves require 130,692 gallons and the tail sieves 113,112 gallons of water per 24 hours. From (6); deliver discharges, as "raggings," to (28); 31.68 tons of hutch products running 0.61% in copper, representing a loss of 0.31%, and 23,059 gallons of water per 24 hours, to (12); and tailings to (26).

9. Six 2-compartment Hodge jigs with brass wire-cloth sieves, 24 × 36 inches. The head sieves of 12 mesh, 21 wire, and 3 inches deep, have a life of 540 days. The tail sieves, of 14 mesh, 22 wire, and 3 inches deep, have a life of 260 days. The plungers, 12 × 36 inches, make 160 strokes per minute. The length of strokes in the head sieves is 0.8125 inch and in the tail sieves 0.75 inch. The head sieves require 138,120 gallons and the tail sieves, 114,450 gallons of water per 24 hours. From (6); deliver discharges, as "raggings," to (28); 25.80 tons of hutch products running 1.82% in copper representing a loss of 0.79%, and 23,336 gallons of water per 24 hours, to (13); and tailings to (26).

10. Six 2-compartment Hodge jigs with brass wire-cloth sieves, 24 × 36 inches. The head and tail sieves of 14 mesh, 22 wire, and 3 inches deep, have a life of 260 days. The plungers, 12 × 36 inches, make 160 strokes per minute. The length of stroke in the head sieves is 0.689 inch and in the tail sieves 0.625 inch. The head sieves require 90,276 gallons and the tail sieves 80,610 gallons of water per 24 hours. From (6); deliver discharges, as "raggings," to (28); 11.16 tons of hutch products running 0.28% in copper representing a loss of 0.26%, and 22,529 gallons of water per 24 hours, to (14); and tailings to (26).

11. Two 3-compartment Hodge jigs with brass wire-cloth sieves, 24 × 36 inches. The head sieves, of 10 mesh, 20 wire, and 2.75 inches deep, have a life of 405 days. The middle and tail sieves, of 12 mesh, 21 wire, and 2.75 inches deep, have a life of 540 days. The plungers, 12 × 36 inches, make 160 strokes per minute. The length of strokes in the head sieves is 0.875 inch, in the middle sieves 0.689 inch, and in the tail sieves 0.625 inch. The head sieves require 46,126 gallons, the middle sieves 29,282 gallons, and the tail sieves 40,252 gallons of water per 24 hours. From (7), via two hydraulic classifiers which require 23,740 gallons of hydraulic water per 24 hours and deliver 0.78 ton of mineral running 75.8% in copper; with 4,885 gallons of water per 24 hours; deliver 1.62 tons of material on the head sieves, and discharges as No. 2 mineral running 85.5% in copper; 0.30 ton of material on the middle sieves, as No. 4 mineral running 56.7% in copper; 0.44 ton of material on tail sieves, as sand running 8.3% in copper, to (23); and tailings to (26).

12. Two 3-compartment Hodge jigs with brass wire-cloth sieves, 24 × 36 inches. The head and middle sieves, of 12 mesh, 21 wire, and 2.75 inches deep, have a life of 540 days. The tail sieves, of 14 mesh, 22 wire, and 2.75 inches deep, have a life of 260 days. The plungers, 12 × 36 inches, make 160 strokes per minute. The length of stroke in the head sieves is 0.75 inch and in the middle and tail sieves 0.625 inch. The head sieves require 52,258 gallons, the middle sieves 42,326 gallons, and the tail sieves 33,860 gallons of water per 24 hours. From (8); deliver 0.16 ton of material on head sieves, as No. 2 mineral running 56.5% in copper; 0.12 ton of material on middle sieves, as No. 4 mineral running 28.2% in copper; 0.26% ton of material on tail sieves, as sand running 6.5% in copper, to (23); and tailings to (26).

13. Two 3-compartment Hodge jigs with brass wire-cloth sieves, 24 × 36 inches, of 14 mesh, 22 wire, and 2.75 inches deep, having a life of 260 days. The plungers, 12 × 36 inches, make 160 strokes per minute. The length of stroke in the head sieves is 0.625 inch, in the middle sieves 0.563 inch, and in the tail sieves 0.5 inch. The head sieves require 44,916 gallons, the middle sieves 50,876 gallons, and the tail sieves 32,306 gallons of water per 24 hours. From (9); deliver 0.12 ton of material on head sieves per 24 hours, as No. 4 mineral running 59.8% in copper; 0.12 ton of material on middle sieves per 24 hours, as No. 4 mineral running 49.8% in copper; 0.30 ton of material on tail sieves per 24 hours, as sand running 6.0% in copper, to (23); and tailings to (26).

14. Two 3-compartment Hodge jigs with brass wire-cloth sieves, 24 × 36 inches. The head and middle sieves of 14 mesh, 22 wire, and 2.75 inches deep, have a life of 260 days. The tail sieves of 16 mesh, 24 wire, and 2.75 inches deep, have a life of 230 days. The plungers, 12 × 36 inches, make 160 strokes per minute. The length of stroke in the head and middle sieves is 0.563 inch and in the tail sieves 0.5 inch. The head sieves require 35,414 gallons, the middle sieves 43,706 gallons, and the tail sieves 41,806 gallons of water per 24 hours. From (10); deliver 0.12 ton of material on head sieves per 24 hours, as No. 4 mineral running 18.7% in copper; 0.08 ton of material on middle sieves per 24 hours, as sand running 8.2% in copper, to (23); 0.16 ton of material on tail sieves per 24 hours, as sand running 8.6% in copper, to (23); and tailings to (26).

15. V-shaped settling tank. From (6). Fifty-eight thousand six hundred and sixty-two gallons of hydraulic water per 24 hours are added and go to (15) and (21). Deliver 20 tons per 24 hours, running 0.74% in copper and 54,232 gallons of water in the pulp, via plug discharges, to the upper decks of (16); 22 tons per 24 hours, running 0.63% in copper and 49,478 gallons of water in the pulp, via plug discharges, to the lower decks of (16); and 101.5 tons running 0.33% in copper, as overflow, to (26).

16. Two double-decked round tables, 17.5 feet in diameter, making 1 revolution per minute, and sloping 1.25 inches to the foot. They also have spreaders which are 7 feet in diameter and have a slope of 1.5 inches per foot. They require 23,172 gallons of clear water on the upper decks and 23,172 gallons of clear water on the lower decks per 24 hours, besides 15,494 gallons of jet water to each deck. From (15); deliver concentrates to (17) and 22.5 tons of tailings per 24 hours, running 0.25% in copper, to (25).

17. Centrifugal pump with a discharge 2.5 inches, and a fan 14.5 inches, in diameter, making 700 revolutions per minute for a 20-foot lift and 500 revolutions per minute for a 15-foot lift. Handles about 30 tons of material with 10% solids per 24 hours. A hard cast-iron lining lasts 6 months and a chilled cast-iron fan 12 months. (17), (20), and (24) require 36,678 gallons of clear water per 24 hours for the arbors. From (16), (22), and (25); delivers to (18).

18. Distributing box. From (17); delivers to (19).

19. Two Wilfley tables. Receive 27.2 tons per 24 hours from (18), running 1.38% in copper and carrying 60,647 gallons of water. This represents a loss of 0.62%. Require 35,325 gallons of wash water per 24 hours. Deliver 0.58 ton of concentrates per 24 hours, running 30.5% in copper, as No. 5 mineral with 2,534 gallons of water; and about 27 tons of tailings per 24 hours, running 0.62% in copper and carrying 66,266 gallons of water, to (20).

20. Centrifugal pump with details as in (17). From (19); delivers to (21).

21. V-shaped settling tank. From (6) and (20); delivers 11.5 tons per 24 hours, running 0.66% in copper, and 49,607 gallons of water in pulp, via plug discharge to the upper deck of (22); 18.0 tons per 24 hours, running 0.59% in copper, and 55,346 gallons of water in the pulp, via plug discharges to the lower deck of (22); and overflow to (26).

22. One double-decked round table with details as in (16). It requires 11,586 gallons of clear water on the upper deck and 11,586 gallons of clear water on the lower deck per 24 hours, besides 15,494 gallons of jet water for each deck. From (21); delivers concentrates to (17) and 12.82 tons of tailings per 24 hours, running 0.22% in copper, to (25).

23. Two 2-compartment Hodge jigs with brass wire-cloth sieves, 24 × 36 inches. The head sieves of 14 mesh, 22 wire, and 2.75 inches deep, have a life of 260 days. The tail sieves of 16 mesh, 24 wire, and 2.75 inches deep, have a life of 230 days. The plungers, 12 × 36 inches, make 160 strokes per minute. The length of stroke in the head sieves is 0.625 inch and in the tail sieves 0.563 inch. The feed hoppers require 41,436 gallons, the head sieves 48,320 gallons, and the tail sieves 44,300 gallons of water per 24 hours. From (11), (12), (13), (14), and (27); deliver material on sieves and discharges, as No. 2 and 3 mineral; and tailings to (24).

24. Centrifugal pump with details as in (17). From (23); delivers to (29).

25. Three settling tanks to be used when Wilfley tables (19) are not run. From (16) and (22); deliver settlings to (17) and overflows to No. 2 catch basin or to (26).

26. General tailings launder. From (7), (8), (9), (10), (11), (12), (13), (14), (15), (21), (25), (27), and (29); delivers to dump.

27. Settling tanks. From overflow of mineral and rejigging sand tanks; deliver 4.41 tons per 24 hours, as plug discharges, running 1.94% in copper, to (23); and overflows to (26).

28. No. 1 catch basin. From (7), (8), (9), and (10); delivers "raggings" to (2).

29. One Wilfley table. From (24); delivers concentrates as mineral; and tailings to (26).

Following is a sizing test of the material from the stamp mortar with 0.625-inch round holes in the mortar screens:

On 5 Mesh. Percent.	Through 5 Mesh, on 10. Percent.,	Through 10 Mesh, on 20. Percent.	Through 20 Mesh, on 40. Percent.	Through 40 Mesh, on 60. Percent.	Through 60 Mesh, on 100. Percent.	Through 100 Mesh. Percent.
44.5	11.1	7.0	6.2	4.8	3.0	22.2

Percentage of the various grades of mineral in the mill returns:

Barrel work or mass copper		6.5	percent.
Number 1 hutch or mortar discharge		12.7	"
" 1 discharge	0.625-inch	10.7	"
" 1 "	rough jigs	16.7	"
" 2 "	finisher jigs	21.9	"
" 3 "	slimes copper	31.5	"

The mill operates two shifts per day, six days a week.

Power and Water.

Six 250 horse-power Stirling water-tube boilers and a Green economizer, housed in a separate building of stone and steel, supply power to the mill. These boilers are run at a pressure of 175 pounds per square inch. Draft for the boilers is furnished by a brick-lined self-supporting steel smoke-stack, 7.5 feet in diameter and 165 feet high.

There is a Nordberg pump handling 20,000,000 gallons per 24 hours. It takes feed water, for the regular operations, through a 40-inch riveted steel pipe, 1,400 feet long, from an intake crib in Lake Superior. On Sundays or days of inactivity, feed water is pumped from a small stream which is dammed about 1,000 feet away. The pumps for fire protection and for domestic purposes are also served from this stream. By actual measurement the amount of water required by the mill in 1905, as shown in the flow-sheet, was 3,038,954 gallons per 24 hours.

The most of the figures on water quantities and capacities of the various machines as shown in the above flow-sheet were obtained in 1905. Since that time the rolls have been installed for re-crushing, changing the conditions somewhat throughout the mill.

Costs.

In 1905, 570,613 tons of rock were stamped yielding 10,476,462 pounds of fine copper, or 18.36 pounds copper per ton of rock. The cost of production was 10.5 cents per pound for ordinary expenses and 10.93 cents including construction expense. The cost of mining, stamping, dressing, etc., was $1.50 per ton of rock for ordinary working expenses and $1.67 per ton including construction expense.

Table 140 gives the costs at this property in 1906.

TABLE 140. — COSTS AT THE TRIMOUNTAIN MINE IN 1906.

Tons of rock stamped	506,492
Yield per ton of rock in pounds	19
General expense per ton of rock stamped	$0.08
Surface expense " " " "	0.16
Superintendence and labor per ton of rock stamped	1.05
Underground expense " " " "	0.21
Rock-house expense " " " "	0.08
Transportation to mill " " " "	0.11
Stamping " " " "	0.21
	$1.90
Smelting, refining, and marketing per ton of rock stamped	0.23
Construction per ton of rock stamped	0.10
Amortization " " " "	0.22
Total	$2.45
Average cost per pound of refined copper in New York. Cents	12.86

The average cost per ton of rock stamped during 1907 was 20.05 cents; 49.66% of which was for labor, 2.32% for stamp shoes, 1.10% for oils and waste, 38.49% for coal, and 8.43% for all other supplies.

Pumping costs were 1.94 cents per ton of rock stamped. 41.32 tons of rock were stamped per ton of coal burned. 22.78 tons of rock were stamped per man per day.

CHAPTER XVII.

GENERAL CONSIDERATIONS.

This chapter includes general principles, accounts and reports, costs, and testing.

General Principles.

§ 666. There are certain general principles which apply more or less to all mills and which will now be briefly considered. They deal with such points in the design, location, and the running of mills as are of especial interest to the practical ore dresser. The author will not consider the subject at all fully from the point of view of the mechanical, civil, or electrical engineer — for such information the reader is referred to various treatises on those subjects.

§ 667. Location of Mills. — The following points have to be considered: the distance from the mine; the amount and source of the water supply and its constancy during the whole year; the supply of fuel; the position of the power plant for steam power, water power, or electricity, as the case may be; the accessibility of supplies and the shipment of the products; the room for disposal of tailings; the room for future additions; the safety of the location from floods, snow slides, land slides, etc. The site must be so chosen that the greatest economy will result. For example, when all the other points are favorable it is best to have the mill just below the mine opening. In case, however, the mine is in a somewhat inaccessible place, it may be cheaper to transport the ore to a more accessible spot than to bring water and supplies to the mine.

§ 668. Mill Site. — There seem to be three classes of mill sites: (1) A hillside or terraced site with a steep sloping mill. (2) A flat site with a sloping mill. (3) A flat site with a flat mill.

These have been discussed to some extent in Chapter XVI, but some of the advantages and disadvantages will be taken up here.

The advantages claimed for the side-hill site are that the ore when once started at the top of the mill follows the various steps of the treatment under the influence of gravity; that the machinery is nearer the ground; that much of the wear and annoyance resulting from the use of elevators in a mill is avoided; and that the tailings pass off by gravity. The disadvantages are that the cost of construction is considerably greater, since excavations have to be made and retaining walls built; that it is not so easy to send stuff back for re-treatment; that the mill is not so accessible either for men to move about inside or for teams to approach on the outside; that the site is inconvenient and inelastic, that is, the machines have to be arranged in a more or less predestined order; and it is hard to make additions which will be conveniently located with respect to the original.

The flat site with a sloping mill has the advantage that it saves the expense of excavating and building retaining walls; that it is accessible inside and out; that additions can easily be made to it at any desired point; that it may require no more elevators than the mills built on a gentle slope. The disadvantages are that the ore has to be elevated as a rule at the start; that one end of the

mill has to be built up on a framework; and that it may be necessary to elevate concentrates and tailings.

The flat mill on a flat location has the advantage that it is cheap to construct; that it is easily accessible; that additions can easily be made; and that it is compact and covers less ground than the other form. The disadvantages are that more elevators are required, which wear out rapidly and annoy the mill men by breaking down; that many of the machines are elevated some distance from the ground; that there may be a lack of light on the under stories; and that concentrates and tailings may have to be elevated.

The usual form of concentrating mill is a single-story mill built either on a gentle sloping site or on a flat location. In this usual form the ore is received at a height which allows it to pass through the crushing machinery. Then in the majority of cases it is elevated to the trommels and passes through the trommels, classifiers, jigs, and fine-sand concentrators, the only re-elevating being of middlings, usually after re-crushing, to go either back into the regular system again or to be treated on separate middling machines. In a few exceptions the middlings pass on straight without re-elevating. Some of the mills elevate the concentrates and even tailings. There are also a few instances where, for special reasons, ore is elevated at other points than those just indicated. The mills seem generally to obey Rittinger's rule that the arrangement should be such that the middlings can be carried forward in the shortest and simplest way to the next following manipulation, and that they should not be allowed to descend unnecessarily so as to require corresponding unnecessary re-elevation.

§ 669. PLANT. — In addition to the mill itself, other buildings are necessary. The power house is, as a rule, located in a little building joined to one side of the mill. The carpenter shop, machine shop, and blacksmith shop usually serve not only for the mill but for the mine, especially in small plants where the mill is near the mine. In some cases these shops serve the mill and smelter. The three shops may be all in one building or more commonly the blacksmith shop and the machine shop may be in one building, either together or separated by a partition, while the carpenter shop is in a separate building. As a rule, these shops are not very elaborate, their equipment being generally confined to one or more drills, lathes, and planers, and perhaps a milling machine.

The assay office is usually a separate building, or it is in the building with the superintendent's office and the civil engineer's office. It should never be located in the mill on account of the jar being bad for the balances. It may serve both mine and mill or mill and smelter, or all three, depending on their relative location. Unfortunately an assay office is not considered essential by some mill men and no provision is made for it. This the author believes to be a mistake since the assay office used in connection with systematic sampling and testing will, in the majority of cases, make a saving far beyond the cost of its maintenance. In addition to the preceding buildings, a storehouse is also frequently included in the plant.

§ 670. CONSTRUCTION OF MILL BUILDINGS. — The most important thing is solidity. The special points to be considered are: (1) Strong foundations to stand the weight of the ore bins, heavy machinery, and vibration from the latter. (2) Framing of sound materials and well put together for the same reasons. (3) Floors double, made tight, and with a slight slope in one direction toward a catch launder and sump to prevent accumulation of pools of water and also to allow ease of cleaning and catching anything of value which may have been spilled thereon. (4) Walls and roofs tight to keep out cold and wet. (5) All possible precautions against fire. (6) Good light and ventilation. (7) Plenty of room, ease of access to all parts, and ease of making repairs.

In Europe, especially in Germany, the mills are frequently made of brick and stone or the very modern ones of iron. This is due first to the cost of timber, and second to the fact that mining and milling are on a more permanent basis there than in the United States. The almost universal construction of the mills visited by the author is of wood. The woods used in this country are spruce and the various pines for soft woods, and oak or chestnut for hard woods. The kind used depends chiefly on availability, provided it is sufficiently durable.

The sides of mill buildings are in many cases boarded vertically and the cracks battened. There is one objection to this method, namely, that the battens are liable to shrink and leave large cracks as they dry. A better method is to double board the sides, the boards breaking joint in every case. Clapboarding is sometimes used, especially at Lake Superior. The roofs are almost always shingled, sometimes double boarded without shingling.

Instead of boards, corrugated iron is used to some extent to cover the sides and roof. It is stronger and more durable than wood, and is fireproof, thereby saving high premiums for insurance. Its disadvantage is that it makes the building hard to heat in winter, owing to its high conductivity.

Some mills are painted outside, while others are not. In the former case red mineral paint is the kind most used, which not only helps to preserve the wood, but also aids somewhat in fireproofing. For the inside of the mill whitewash or white paint is often used, which makes it lighter.

Sloping floors are used in some mills, either to suit the slope of launders, as in almost all of the Lake Superior native copper mills, or to drain away water.

§ 671. POWER. — The use of water power is applied whenever possible, owing to its cheapness. There are three kinds of wheels: (1) The so-called impulse, or Hurdy Gurdy wheels, including the Knight, the Pelton, and the Dodd; (2) turbine wheels which act by pressure, of which the Leffel is the most common in the mills; (3) overshot wheels, which act by gravity.

The kind of wheel to be used will depend chiefly on the head of water. Regarding the comparative efficiencies of impulse and turbine wheels there does not appear to be any great difference, both giving 75 or 80% efficiency under the best conditions. The reason that turbines are not commonly used with high heads is that as the head increases (the power of the wheel remaining constant) the size of the wheel decreases until it becomes almost toy size and its passages are so small as to be liable to clog. The speed of the wheel also increases at the same time until the number of revolutions exceeds the practical mechanical limit for good running; while on the other hand the simplicity of construction, mounting, and running of a Pelton or Dodd wheel remains the same for all heads, the high heads permitting smaller wheels of stronger build. Just where this upper limit of the use of turbines will come will depend on the horse-power. Mill practice, as previously shown, seems to put it at about 60 feet for powers below 100 horse-power. At Niagara Falls, however, where the horse-power is high (5,000 per wheel) and the wheels consequently large, they work under a head of 140 feet.

Another disadvantage of turbine wheels is that when run below their full power their efficiency is considerably lessened. This disadvantage also occurs in some of the impulse wheels owing to the fact that the nozzle should have a gradual reduction toward the outlet for the greatest efficiency. Thus a Knight wheel has a sliding tongue which cuts off part of a slot-shaped nozzle. Some Pelton wheels have an arrangement for deflecting the nozzle so that part of the stream strikes outside of the buckets and consequently does no useful work. In case the change is permanent the efficiency may be restored by putting on

a smaller nozzle. Some wheels have two or more nozzles acting at the same time and may be regulated by shutting off one nozzle.

Just as the turbine wheels have an upper limit of efficiency, so the impulse wheels have a lower limit owing to the fact that with low heads the velocity of the jet is low and the efficiency falls off. This limit does not seem to be exactly fixed. Mill practice as shown puts it at about 60 feet head, while manufacturers' catalogues go down to 20 feet head.

Overshot wheels, even when of large size, have an efficiency somewhat less than impulse or turbine, generally not much above 60 percent. They are also expensive to build and maintain, and occupy a large space, and on all these accounts are going out of use. The chief point in their favor is that their efficiency does not decrease to any great extent when the amount of water is decreased. Undershot, breast, and current wheels have low efficiency, and are not found in the mills.

Occasionally, it is possible to make use of the fall of pulp in a mill. As a rule, however, this scheme is not available, since it requires a considerable fall, which is seldom practicable.

§672. Steam was until recently the most common source of power in the mills. The boilers are almost always of the fire-tube type. The length varies from 10 to 20 feet, but the most of them are 16 feet. The diameter varies from 44 to 90 inches, average about 60 inches. The pressure used varies from 60 to 125 pounds per square inch, average about 90. It is a practice in some of the mills to have an excess of boiler capacity. This gives a good efficiency and allows one boiler to be shut down for repairs without shutting down the mill. Where the water tends to form scale badly, two large flues are sometimes used instead of a number of small tubes. This facilitates cleaning, but the efficiency is not quite so high. The boiler plant is in most cases considerably in excess of the engine plant, since in addition to steam for running the mill machinery the boilers may have to supply steam for heating, for drying, for pumping the water, running the machine shop, and, in cases where the mill is at the mine, for hoisting, running the compressor, etc.

The form of engine used is mostly of the simple, single-expansion, non-condensing type. These include engines with common slide valves, piston valves, poppet cut-offs. Compound engines are used and include tandem-compound and cross-compound, engines with receivers and without, and engines with condensers and without. Triple-expansion engines are found in the larger mills.

Where power is to be conveyed to a considerable distance, steam is at a disadvantage on account of loss from condensation. If the steam pipe passes through a space which is to be heated there is no harm in leaving the pipes uncovered, in which case about five times as much water of condensation will be obtained as would if the pipe were well covered. A good steam separator is necessary to prevent the condensed water from reaching the engine. This method of heating is, however, not so economical as the use of exhaust steam. Steam pipes should not be allowed to touch wood. For this reason the hole in a partition should be larger than the pipe, and where a pipe passes near woodwork, sheet metal shields should be hung between the pipe and the wood. Where dry steam is needed for engines at some distance from the boilers, a steam separator is necessary.

§673. Gas, gasoline, and oil engines are not in general use in the mills. The location of mills would prohibit the use of gas as a rule, but there seems to be a field for gasoline and oil engines in localities where coal and wood are dear and there is an insufficient supply of water to generate steam. The usual precautions to guard against fire should be taken. A plant of four gasoline

engines has been installed at the Fuller mines near Cañon, Yavapai County, Arizona. A 10 horse-power engine drives the Gates breaker at the mine opening, a 38 horse-power engine runs a 10-stamp battery and the electric lights. A 6 horse-power high-speed engine, especially designed for steady and uniform speed, runs the concentrators. A 10 horse-power engine pumps water up 30 feet and through 3,100 feet of pipe line to the mill. The four engines consume about 100 gallons of gasoline per 24 hours, making the total cost of power for 24 hours about $17.

§674. Electricity is used as the motive power in the majority of modern mills. The advantages of its use are that electric motors require less attention and repairs than steam engines, and at the same time they are much more efficient in transforming electricity into work than steam engines are in transforming calorific power of steam into work. The loss in transmission is less with electricity than with steam. In some cases the power is supplied to a number of mills by a centrally located power plant. The larger mills usually have their own power plants generating electricity by steam or water power and transmitting the same to the several points where it is to be applied. There seems to be a growing tendency to run individual machines or groups of machines by separate motors. In general it may be said that the electric motor furnishes an ideal source of power, particularly for vanners and tables which require constant speed. The induction motor seems to be a favorite among mill men, possessing as it does the good qualities of constant speed, ease in starting, and comparative simplicity of construction.

§675. It will be of interest to have a rough rule by which to calculate the horse-power required per ton of ore treated per 24 hours. Of course, this will vary in different mills with the kind of ore and the method of treating it, and it will even vary in the same mill owing to slight changes of velocity or of the speed of feeding and discharge, or of the size of the material fed to the breakers. For these reasons average figures can have only a general value. The following are the figures obtained; the figures in every case being the horse-power required per ton treated per 24 hours by the mill: One stamp mill on cement gravel uses 0.15 horse-power. Nine stamp mills on quartz rock range from 0.39 to 1.45 horse-power, average 0.86. Three combination silver mills range from 1.82 to 3.33 horse-power, average 2.42. Nine mills containing trommels, jigs, classifiers, vanners, etc., of which eight treat ores containing galena, while one treats very soft pyrite ore, range from 0.12 to 0.50 horse-power, average 0.33. Seven mills similar to the last, but on harder ores, range from 0.50 to 1.00 horse-power, average 0.78. Four Lake Superior mills treating native copper rock range from 0.32 to 0.77 horse-power, average 0.59; this does not include the power used in the rock houses, which would raise the figures slightly. Edison by special devices gets the power down to 0.21 horse-power on hard ore. In making the preceding calculations three points were brought out: First, as a rule, about 80 or 90 percent. of the power used in a mill is used in crushing, and only 10 or 20 percent. for concentrating. This is an argument for avoiding crushing whenever possible. Second, the combination mills using amalgamating pans require the most power, probably owing to the fine grinding that is done. Third, mills treating galena ore require less power than similar mills treating other ores.

§676. Belting is commonly used for the transmission of power short distances. For long distances belts are liable to have an unsteady flapping motion, which is bad for both the belt and the machinery. There are three chief kinds: leather, rubber, and canvas, the second being the most common in concentrating mills.

Of leather belts, the best kind is considered to be the oak tanned. The

common rule for proportioning them is that a single belt 1 inch wide, running at 1,000 feet per minute, transmits 1 horse-power; a double belt needs to run at only 700 feet per minute, or even 500 feet if it has good length, in order to do the same. Taylor, however, says that to get the longest life with the least attention for stretching, a double belt 1 inch wide should run at from 950 to 1,100 feet per minute to transmit 1 horse-power. For fastening the ends, lacing or clamps may be used, or they may be scarfed, lapped, and cemented together with or without rivets. The last gives the strongest joint, but lacing or clamps are preferable for new belts where they have to be frequently tightened to take up the stretch. Care should be taken never to put belts on too tight, as this will cause high friction with subsequent hot boxes, wear of oil and babbitt, and perhaps broken pulleys. Taylor recommends that for a double leather belt when at rest the tension be not more than 71 pounds per inch of width, in order that the belt may have long life. Vertical belts require to be tighter than horizontal, since their weight does not help the driving friction; for this reason they should be avoided as far as possible. To reduce friction in the boxes of a shaft it is best to have belts running in both directions from it. In putting on leather belts, placing the smooth or flesh side next to the pulley gives the greatest adhesion, but this leaves the rough or grain side out, which has less tensile strength than the smooth side; the grain side is also harder and stands the wear better if put inside. To give the greatest arcs of contact, the under side of a horizontal or inclined belt should be the tight or driving side. To get the greatest adhesion between the pulley and the belt the surfaces of each should be as smooth as possible. Lagging an iron pulley with leather increases the adhesion 50 percent. In caring for leather belts, oil should not be allowed to drop upon them as it shortens the life of the leather; they should not be put in very hot, cold, or damp places. When they become dry from use they should be dressed with blood-warm tallow, which is allowed to dry before the fire or in the sun. If very hard and dry, they should be dressed with neat's-foot or liver oil mixed with a small quantity of resin, which prevents the oil from injuring the belt. To stop slipping, common bar soap or resin is frequently used. Oil should never be applied to stop slipping, since its action is that of a lubricant and promotes rather than prevents slipping.

Rubber belts are very durable, stand heat, cold and dampness better, and have greater strength and less slip than leather. Grease is bad for rubber belts, as it decomposes the rubber. To preserve them they may be painted with a composition made of equal parts of red lead, black lead, French yellow, and litharge mixed with boiled linseed oil, and japan enough to make it dry quickly. If a rubber belt slips from dust or other cause, moisten the inner side lightly with a little boiled linseed oil and sprinkle with chalk. A little dry resin will often stop rubber belts from slipping. Vezin holds that with proper usage rubber belts need no dressing, and the compounds generally used to prevent slip almost invariably contain grease, which decomposes the rubber, and at the same time dirt soon mixes with the dressing and forms knobs all over the pulleys.

To keep belts at their proper tightness and obviate frequent tightening, as well as to give ample warning of its necessity, tightening pulleys or idlers should be used working preferably on the slack side of the belts. The best splice to insure smooth running of high-speed belts over tighteners is the scarfed, lapped, and cemented leather belt or the endless factory-made rubber belt. Where a laced joint must be used the diamond lap splice is best; for moderate speeds, the ordinary butt splice may be used. According to Vezin, the total stretch of a good belt, whether leather or rubber, if properly treated and not subjected to excessive strains, ought not to be more than 1½ or 2%. Taylor says that the total stretch of leather belting exceeds 6% of the original length.

The use of open belts without tighteners often involves a slip of from 2 to 3%, which must be allowed for in the calculations. With the use of well proportioned belts and tightening pulleys, this figure is reduced to 0.5%, which represents the creep and not slip, and may ordinarily be neglected.

§ 677. ROPE TRANSMISSION. — The advantages of rope either of wire or hemp for the transmission of power are that they can be used to drive at any angle by the use of intermediate sheaves, and they always give warning of a break. Unwin says that when transmitting full power the efficiency of the system is remarkably high. Probably for moderate distances the efficiency is greater than with any other mode of transmission. But the waste of work is the same for all loads transmitted, so that when working at less than full power the efficiency falls off.

The limit of economy of rope transmission is about a mile in distance. Where long spans are used, intermediate supporting pulleys are required, fewer for the driving side, however, than for the slack side. A better scheme than this, however, is to use intermediate stations at each of which are two sheaves for continuing the transmission by a new rope.

In order that the rope may drive satisfactorily it must have a certain amount of deflection or sag. It is found in practice that it does not drive satisfactorily on spans less than 54 feet unless tightening sheaves are used on the slack side of the rope. The usual maximum span when the under side of the rope is the driving side is about 370 feet, but by using the upper side as the driving side longer spans may be used — in one instance as much as 1,700 feet.

The field of wire-rope transmission has been considerably narrowed by electricity, and several instances are known to the author where electricity has replaced it in coal plants. Its disadvantages are that it is somewhat troublesome to maintain in good running order since the variation of length with the temperature is not adequately provided for by the tightening devices.

§ 678. GEARING has the advantage that it affords a positive motion without any chance of slip. Its use is to be avoided, however, as much as possible, since it wears rapidly from the dust and causes increased loss of power by friction unless cut gears efficiently lubricated and protected from dirt are used. Cut gears have less loss from friction than cast gears. The special field for gearing seems to be in its use as bevel gears to change the direction of transmission of power through 90°.

§ 679. SPROCKET AND CHAIN DRIVE is used to some extent in the mills, chiefly on elevators and trommels. As a rule, however, it is not favored owing to the trouble resulting from its complication and necessity for frequent repairs. Whenever used, frequent inspection is necessary to avoid breaks as far as possible.

§ 680. FRICTION CLUTCHES are quite common in the mills, being used to connect various sections of the plant to the main shafting; for example, for the connecting or disconnecting of either a single or a double battery in a stamp mill. They should never be thrown in with a jerk, but be made to take up their load gradually so that the driving machinery attains its full speed with an approximately uniformly accelerated motion.

§ 681. DESIGN OF MACHINES. — In choosing machines there are certain points to be looked after. Perhaps the first and most important one is strength. This is more essential in milling work than in any other line, since milling machinery in many instances goes into remote and inaccessible districts where a breakdown means much loss of time, delay, and expense in replacing the broken part. Strength does not necessarily imply that the machine should be huge and cumbersome, but that it should be so designed that the stock is put in where the stresses occur. Superfluous stock does no good, and it has the dis-

advantage that it raises the original cost and also the freight charges. McCallum considers that there is room for considerable improvement in this respect. He advocates that the size of the parts be proportioned according to the calculated stresses, such modifications being made as intelligent interpretation of the results of practical experience show to be necessary. The strength and weight should never be so low, however, that the machine lacks rigidity, and is unable to absorb vibrations. It follows that sectional machines are to be avoided unless the conditions are such as to make their use absolutely necessary.

The second important point is simplicity; that is, of two machines of the same type always use the one which has the fewest number of parts, other things being equal, since the simpler machine is the easier to keep in good running order. A good machine does not have to be well finished all over, since certain parts can always be made rough without any detriment. In some places too much care and finish cannot be given; for example, in journals and their alignment. Attention should be paid to the wearing parts of the machine. They should be easily removable and should be so designed that when they are worn out only a small amount of material should be left to be thrown away.

High speed is to be avoided as far as possible in milling machinery, since with the scant care usually bestowed in mills, when once the machine begins to get out of order, it is liable to shake itself to pieces.

The use of standard machines with easily replaceable parts is to be recommended on account of the time and money saved by their use. A great variety of machines in a single mill doing the same work is to be avoided, as each requires its own set of supplies, and each kind of machine has its own idiosyncrasies to be learned and cared for by the mill force. If all the machines are alike, saving in both these directions is effected. The author believes that it pays to carry this principle of replaceable parts even so far as to have models, drawings and templates or gauges for the wearing parts giving the proper sizes; for example, to show the exact dimensions of the shoe and stem sockets in stamp bosses, to show the taper of the shoe shank and of the stems, to show the right size of the jaw and cheek plates in breakers in order that a new set may be sure to fit, to show the proper sieve dimensions, height of tailboards, etc., on jigs so that one jig will not have a tailboard 4 inches high while its neighbor treating the same material has one only 3 inches high. There are many other similar examples that might be mentioned.

§ 682. Lubrication and Care of Journals. — There are three elements of cost in lubrication: that of the power consumed in friction, that of the oil used, and that of the wear in the boxes. As in all other places where machinery is used, so also in a concentrating plant, lubrication is an important matter. Care in this may make the difference between a dividend and an assessment.

The qualities of a good lubricant as given by Kent are: (1) Sufficient body or viscosity to keep the surfaces free from contact under maximum pressure. (2) The greatest possible fluidity consistent with the foregoing condition. (3) The lowest possible coefficient of friction which in bath lubrication would be for fluid friction approximately. (4) The greatest capacity for storing and carrying away heat. (5) A high temperature of decomposition. (6) Power to resist oxidation or the action of the atmosphere to cause gumming. (7) Freedom from corrosive action on the metals. Conditions (1) and (2) are fulfilled by the following oils in the order named: good mineral oils; sperm; neat's-foot; lard oil — the first being the best. Kent also gives the best lubricants for different purposes as follows:

Low temperatures as in rock drills driven by compressed air	Light mineral lubricating oils.
Very great pressures, slow speed	Graphite, soapstone, and other solid lubricants.
Heavy pressures with slow speed	The above, and lard, tallow, and other greases.
Heavy pressures and high speed	Sperm oil, castor oil, and heavy mineral oils.
Light pressures and high speed	Sperm, refined petroleum, olive, rape, cottonseed.
Ordinary machinery	Lard oil, tallow oil, heavy mineral oils, and the heavier vegetable oils.
Steam cylinders	Heavy mineral oils, lard, tallow.

The mineral oils for ordinary machinery should have a specific gravity of 25° to 29° Beaumé and a flash point of 360° F.

To mineral oils to be used for ordinary work it is usual to add about 25% of animal oil which adheres better to the metal, while the mineral oil in turn adheres to it. The liability of animal oils to decompose into free fatty acids is the disadvantage of the mixture. Neat's-foot is probably the least objectionable on this score.

The mill man unfortunately has, as a rule, no means of making the usual tests on oil and is therefore at the mercy of the seller. It is possible, however, to make a rough test of the lubricating value of different oils by noting the relative times it takes a given bearing to get hot after having been well oiled and run with each sample.

For use in a great many places in a mill the suggestion has been made to the author that the use of hard lubricants of the type of Albany grease (skimmings from glue manufacture) is very suitable. These have the advantage that being applied under pressure of a spring and from closed cups they work from the center of the journal toward the ends where a grit collar is formed, preventing the entrance of dust. They require no attention beyond filling, since they stop feeding automatically when the machinery is not in motion.

§ 683. Wherever possible, lubrication should be continuous whether oil or thick grease is used. This keeps friction as low as possible and at the same time serves as an additional safeguard against grit getting in at the ends of the bearings.

The cutting of bearings and gears is generally due to grit. This must be kept out by all precautions — by having covers which are removed only when there is no chance of dust getting in, and by the use of oil free from dirt. With these precautions the use of cotton waste over an oil hole to filter out dirt is not necessary, except in a few cases where a cover cannot be removed without exposure to dust.

A very simple and efficient device for the lubrication of journals is to have an ordinary small tin funnel fitted into a wooden plug which in turn fits into the oil hole in the journal. A copper wire rests loosely in the funnel which should be fitted with Keystone grease of about the consistency of vaseline. The funnel should be provided with a cover. The moment the journal begins to heat, the temperature is conducted by the copper wire up into the grease, melting the latter so that it runs down into the bearings. In some cases where the cups are liable to fall off, the oil-hole in the journal may be tapped out and the funnel soldered to a nipple screwing therein. Journals thus equipped will run for several weeks without requiring attention.

§ 684. HEATING THE MILL. — This is usually done by steam pipe, using the exhaust steam from the engines. Vezin recommends, instead of putting steam pipes into the various places which it is desired to heat, that a complete heating apparatus consisting of a chamber full of steam pipes be used. Air is heated in this and blown in at the top of the room to be heated while the out draft is at the bottom of the room. In this way, if the ceiling or roof is tight, the space is heated in the most economical manner and with nearly the same temperature at the floor as at the ceiling. In many European mills large stoves are much used for heating.

§ 685. VENTILATION AND DUST PREVENTION. — As far as the presence of impure air is concerned, the ventilation of a mill takes care of itself, but it is the occurrence of hot air and of dust that makes ventilation necessary. Hot air may be let out at the top of the building by swinging shutters on all four sides of the building. These are controlled from below by cords or rods. By having openings on four sides it is always possible to have the outlet on the lee side of the building. Dust is bad not only for the workmen, but also for the machinery. In most of the wet-concentrating mills water is added to the ore very early in the process, either at one of the crushing machines or during the screening, and the amount of dust that is formed is negligible. It is only in dry mills such as pneumatic, magnetic, sampling, and cyanide plants that a large amount of dust is formed. For removing it, the use of permanent openings in the roof, or the opening of doors and windows, is very inefficient and in cold weather inapplicable. The only proper method is to use an exhaust fan, which should be connected with all elevator, screen, and roll casings, so as to produce an inward draught and thus prevent dust from getting out into the mill at the points where the dust is made. In order that the fan may be efficient, the various casings should be made as tight as possible. The fan should have a free discharge passage into the air, or if the dust is valuable a dust chamber with baffle plate will catch the most of it. Passing the dust through a rain of water or atomized water will also settle it. The use of baffle plates without a reduction in velocity is of very little value. Hoppers in the passages serve to catch particles which might otherwise settle and gradually reduce the area.

§ 686. LIGHTING. — Sufficient side windows should be provided so that the quality of the work of the machines may be readily seen. Heavy glass skylights in the roof are even more efficient than side windows. Whitewashing the inside of the mill will help the lighting immensely. For night work, electricity is best, as it is the most convenient, avoids danger of fire, and is cheap and clean. Incandescent electric lights should be surrounded by heavy wire netting where there is any danger of being struck. The electric arc light enables the natural colors of the minerals to be easily recognized and is preferable for hand picking. Electricity is almost universally used to-day, except in a few of the older or of the smaller mills. A dynamo placed in the engine room is usually sufficient for the lighting of all the buildings of a small mining and milling plant, and the attention necessary is confined to the starting, stopping, and occasional oiling and inspection. Some plants have installed a spare machine to use in case of accident or emergency. If oil lamps are used around amalgamated plates, great care should be taken to avoid oil on the latter.

§ 687. The Nernst lamp is finding its way into the mills to a limited extent, as is also the Cooper-Hewitt lamp or mercury arc. Both of the latter are very satisfactory where it is necessary to judge by the eye of the work done by machines, *i.e.*, in jigging mills. At the mill of the New Jersey Zinc Company, Franklin Furnace, New Jersey, a special form of arc lamp, the light of which is especially rich in the so-called ultra-violet rays, is used to enable the mill man to judge of the amount of willemite in the jig tailings. Willemite is rendered phosphorescent under the influence of the ultra-violet rays.

§ 688. LABOR IN THE MILLS. — The tendency of modern ore-dressing mills is to reduce the quantity of labor required, and at the same time to raise the quality of it. The work requiring intelligence is carefully kept separate from the purely mechanical on the theory that a man cannot give satisfactory results if he is working both his brain and his body at the same time.

For purpose of comparison, computations have been made of the tons treated per man, and also the cost per ton. This comparison shows that the

amount treated per man varies greatly even in the mills of the same class. This variation is due to several causes, such as: (1) the size of the mill, since a large mill can always be run with less labor per ton than a small one; (2) the difficulty of the problem, since an easily treated ore gives the mill high capacity and requires only simple treatment; (3) the length of shift, as more men will be required working eight-hour shifts than working twelve; (4) the use of water power instead of steam; (5) whether or not the mill is favorably located and designed to minimize labor; (6) the cost and quality of the labor, for when labor is cheap and of an inferior quality, more will be required. The wages paid are also variable, being governed chiefly by the cost of living. The cost per ton for labor is dependent upon the number of tons treated per man and upon the wages paid.

It may be said that in general the capacity of the mill and the quality of the product depend largely upon the intelligence and reliability of the men employed in the various departments. A saving made in wages may be more than offset by losses in efficiency of machines due to ignorance or neglect. The losses by theft are not common in mills other than gold and silver. To avoid clannishness, which often leads to needless labor troubles, it is well to employ men of several nationalities. In hand picking, boys under supervision may be substituted for men as having keener vision and quicker motion.

One means of increasing the efficiency of the working force is for the most part neglected by mill authorities. This includes sanitary precautions and the hygienic care of the men. A change house furnished with individual lockers, steam coils for drying wet clothes, hand baths, shower baths, and even a swimming tank, would result in highly increased efficiency and a spirit of contentment among the men.

§ 689. WATER. — Water is required in the mill for three things: first, for the concentration; second, for the power, either as water power or to supply the boilers; third, for protection against fire and for domestic purposes. The subject is here considered only from a general point of view.

In the mills the amount of water actually consumed varies widely, from 1.25 to 40 tons of water per ton of ore.

In general the water requirements of a mill depend upon several conditions: (1) Upon the kind of mill. A hand-jigging mill requires very little more water than that which is used in washing off fines and that which goes off as moisture with the concentrates and tailings. The simpler gravity-stamp mills use much less water than the more complex steam-stamp mills. (2) Upon the capacity of the mill and the various conditions which affect it. (3) The water used depends upon the amount that is available. Where there is a plenty there is no need to economize. In dry climates, where an attempt is made to re-use the water from the concentrating plant, as much as 85% is quite easily recovered so that the same water can be made to do duty more than eight times before being discarded.

§ 690. The water supply of a mill comes either by gravity, from a pond or stream, through ditches, flumes, and pipes, or by pumping. Mills which use water for power usually have an ample supply and do not use the water over again for concentration. Occasionally, however, the waste from the water wheels is delivered at such a height that it is available for the washing. It is desirable that the water of the mill supply shall not be muddy and, in order to avoid this, the water is often settled before being used. To keep the water as clear as possible from mud and also to keep larger material out of the pipe it is customary to put a box with an open top around the suction end of the pipe, if the water is pumped.

The power for pumping where the pump is near the mill may be furnished

by steam or by compressed air if the plant includes an air compressor. Where the pump is located at a distance a separate steam plant for pumping has to be installed or the pump may be driven by electric power transmitted from the mill.

Care should be taken in constructing ditches, flumes, and pipe lines that there is sufficient protection from freezing in winter and from damage by storms. An open flume is more liable to freeze than a covered ditch or pipe. Iron pipe should not be used with acid water.

§ 691. Water is usually delivered into tanks located near the top of the mill. The capacity of these tanks will depend upon the conditions, chiefly upon the regularity of the supply, and the liability of its being interrupted. These tanks serve the purpose of store tanks and pressure tanks. In case a constant pressure is desired, as for classifiers, it may be obtained from a small tank, which overflows constantly into a larger tank. Some mills have practically no storage capacity, but most of the mills have storage capacity for from two or three hours up to nine or ten days. As far as concentration purposes go, the height of these tanks above the machines needs to be but little, but for fire purposes it would be wise to give them considerable head. Where it is impracticable to have this head, a fire pump should be put in with pipes leading to fire plugs in different parts of the building with hose constantly attached to them.

As to the kind of water used, the author has found it to be fresh in every one of the mills visited by him, and, in fact, he can cite no ore-concentrating mill which uses anything but fresh water. As shown in § 3, there is an argument for the use of salt water owing to its greater density, provided that the solids dissolved in the water have no injurious effect upon the machines or concentrates in other ways, as is frequently the case in gold amalgamation. There may also be cases in which the salt which would be left with concentrates after drying will be injurious in the later treatment. Thus, when concentrates containing gold are roasted in the presence of salt, there will be a tendency for chloride of gold to form, which will be volatilized and lost.

§ 692. The moisture retained by drained ore is of importance in estimating the moisture in wet ore. The most complete figures are those given in Table 141 which shows the percentages of water found by Von Reytt to be retained by different sizes of ore from the mines of Przibram, Bohemia, after thorough wetting followed by reasonable draining.

The percent. of moisture is based on the wet ore, and is obtained by dividing the difference between wet and dry samples by the weight of the wet samples and multiplying this by 100. The table shows how the percent. of moisture increases on the finer sizes.

TABLE 141. — PERCENTAGES OF MOISTURE RETAINED BY DIFFERENT SIZES OF ORE AFTER THOROUGH WETTING FOLLOWED BY REASONABLE DRAINING.

Size.	Material.	Moisture.	Size.	Material.	Moisture.
Mm.		%	Mm.		%
64–32	Ore.*	0.35			
32–22	Ore.	0.55	3–2	Ore.	6.19
22–16	Ore.	0.74		Calcite.	6.06
16–12	Ore.	1.33	2–1	Ore.	8.59
	Calcite.	2.49		Calcite.	9.30
12–8	Ore.	2.25	1–0.5	Ore.	17.59
	Calcite.	2.58		Calcite.	18.90
8–6	Ore.	3.01	0.5–0.35	Ore.	18.16
	Calcite.	3.38		Calcite.	20.44
6–4	Ore.	2.91	0.35–0.10	Ore.	16.80
	Calcite.	3.98		Calcite.	20.57
4–3	Ore.	5.66	0.10–0	Ore.	16.94
	Calcite.	5.21		Calcite.	21.69

* The principal minerals in this ore were quartz, siderite, calcite, galena, and blende.

In the light of these figures it will be seen that measurement of the water passing off with the mill tailings does not quite give the amount used by the mill since some is retained by the concentrates and some is used for steam.

§ 693. ARRANGEMENTS OF MACHINES IN MILLS. — American concentrating mills differ from many of the German mills in their compact arrangement of all the concentrating machinery under one roof. The ore starts at one end and passes along continuously through the breaking, coarse concentrating, and fine concentrating. Its general course is either in a straight line or in some cases it turns at right angles. The building is not necessarily of a uniform width, but a mill with a large number of jigs or vanners may have this part wider. Trommels and classifiers are commonly placed at a higher level than the jigs so that their products are delivered by gravity to the final washers. The jigs are placed so that the ore in passing through them either flows parallel to the general course of the ore in the mill, or transverse to it. The line shafting usually runs transverse to the general course of the ore in the mill, although sometimes parallel. The former enables most of the machinery to be driven without using quarter-turn belting. The transverse arrangement of the jigs works best with the transverse line shafting. The middlings, when present, are re-crushed in machinery located either back with the first crushing machinery or at the end of the machines which produce them. The former is more common, while the latter is found more especially in long or large mills. The middlings, wherever re-crushed, most frequently go back to the system with the original ore, but in some cases, especially in large mills, they are treated in separate machines located among the others or at one side.

Sectional mills, that is, mills with two or more similar sections arranged side by side, occur in numerous instances, which vary from mills in which each section is entirely separate throughout, to mills in which only the breaking and coarse concentration part is in sections. As examples, we have the gravity-stamp gold mills in which each battery with its plates and vanners forms an entirely independent section, except for the rock breakers; the Lake Superior native copper mills, which are made up of sections, each with its steam stamp, classifiers, jigs, and tables. The use of sections appears more particularly in the large mills where a number of machines are required to do the same work, and the sectional arrangement has the advantage that it enables a part of the mill to be shut down when repairs or improvements are necessary or when ore is scarce, while it is just as cheap in constructing and running. As a means of testing and comparing the effect of different machines or adjustments the sectional arrangement is of great value.

§ 694. The arrangement of the gravity-stamp mills varies somewhat. Where the mill is small there is merely one line of stamps. In large mills, however, this would make the mill too long, and two lines of stamps are used. These two lines may be back to back with the ore bins between them and the pulp flowing away in opposite directions, or the two lines may face one another with the pulp from each flowing toward the other. While it affords greater convenience in looking after the work of the mill, yet preference is not given to it owing to the fact that the ore bins shut out the light, and it has less stability and more vibration.

§ 695. In arranging mills, it is important to have sufficient reserve capacity so that there will be no need of forcing any of the machinery, and so that the work of one machine may be temporarily suspended for adjustment or repairs.

In mill arrangement all useless apparatus should be removed. For example, it frequently happens in making changes in a mill that certain pieces of apparatus are no longer of any value, but rather than take them out the ore is allowed to run through them, thereby entailing a useless expense to keep them in order.

This rule is not so frequently broken, however, as its converse, namely, that all good apparatus should be used to its full extent. To cite an instance, the author found in one mill a settling tank which was capable of doing most excellent work as a settling device, but when so run it did not act as a good distributor. In order to get good distribution the use of the latter part of the tank was given up and another settling tank was put in to follow it, whereas, by a mere re-arrangement of spigots, the first tank could have been made to do both good settling and good distributing.

Not only should useless apparatus be discarded, but the economy of the various machines should be carefully considered, and if it is found that any part of the work is costing more than is gained from it, then that part should be immediately discontinued. This sin is of rare occurrence, however, the usual trouble being that there is a lack of machinery, due perhaps to a short-sighted policy, and stuff is thrown away that might in a few months pay for the machines that were necessary to treat it.

§ 696. Some special notes on arrangement of individual machines are given in Chapter XVI. There are, however, some general points which can best be discussed here.

The question, shall machines be placed in series or parallel to do a given amount of work, is an important one. As a rule, it will be found that it is considered preferable to use the parallel arrangement, that is, for example, having a given amount of ore to be jigged on two jigs, the ore is divided so that each jig treats half rather than running all the ore over the first jig and then the tailings of the first over the second. While it is true that the latter arrangement has the advantage that a grain of concentrates has to run the gauntlet of the second machine, yet the ore has to be rushed at such a speed over the jigs that the chances of losing concentrates in the tailings are probably greater than with the parallel arrangement where the stuff is treated at such a decreased rate that the separation has time to take place. There are, however, special cases where the series arrangement is used. As to whether this is an advantage has not been proved.

An argument for the use of the series arrangement rather than the parallel in crushing machines under certain conditions may be entertained where graded crushing is considered.

§ 697. The coupling together of two different machines so that one makes clean, rich heads while the other makes clean tailings is an idea that seems to be gaining favor with mill men. It is to be recommended as a very efficient arrangement. The ability of the Wilfley table to make clean heads makes it particularly adapted to this scheme, and the use of slime tables joined with Wilfley tables is found in many mills of recent date.

§ 698. The stuff to be treated by a mill can be divided into three parts: coarse mine ore, mine fines, and middlings; each of which differs from the other two sufficiently to make separate treatment preferable although not absolutely necessary.

The coarse mine ore is the largest portion and its treatment forms the main system or backbone of the mill. The arrangement of the machines for the treatment of middlings with relation to the machines of the main system has been discussed in § 693.

The separate treatment of mine fines is not practiced in this country although it is very common in European mills, more particularly those mills where the ore contains more than one mineral, say galena and sphalerite. The usual scheme is to screen out the fines, that is, stuff below 2 or 3 inches, and treat it by itself, while the coarser stuff is broken, picked, and treated separately.

The scheme is advantageous in that in the stuff as hoisted from the mine,

the fines (below 1½ to 3½ inches according to the ore) usually contain considerably more mineral and less gangue than the coarse, or they may contain an entirely different preponderating mineral from the coarse. This is due to the fact that the economic mineral is generally more friable than the gangue. There is logic, therefore, in not undoing a work that has been partly done, that is, in not mixing together again minerals and gangue that have been partially separated, and separate treatment has the same advantages as the separate treatment of two kinds of ore from different mines has, viz.: that the adaptability and adjustments of the machinery can be exactly suited to each class of ore. The additional saving made by treating mine fines separately pays in the end for the larger plant required. In this country, however, where mining and milling are carried on with little regard for future generations, our mill men do not care to make the necessary outlay.

§ 699. The treatment of different varieties of ore separately is to be recommended since each ore requires its own adaptation and adjustment of machinery: neglect of this principle causes poor work. This also applies to mills which have to treat ores which vary considerably in richness, it being wise to treat rich mineral separately from poor. An example of this is in the gold stamp mills in the Thames district, New Zealand, all of which have in addition to their regular stamps a single stamp called the "specimen stamp" in which all rich rock is crushed and treated separately. Also in some of the gold stamp mills of this country one battery is saved for treating special lots of rich ore. There is logic in this scheme since a longer and more careful treatment can be given to a rich ore with profit which could not be applied to a poor ore without loss.

This shows that the richer the ore the more perfect should be the arrangements for treating it. Perfection does not mean in this case necessarily a more elaborate arrangement and a sacrifice of simplicity. On the contrary, however, an arrangement should always be chosen which is as simple as possible without carrying the idea beyond the limit, as was the case in one instance related to the writer, of a mill using stamps and vanners where graded crushing and concentrating should have been used. The excuse given was that a combination of stamps and vanners formed a simple mill, which was the chief thing to be desired.

§ 700. Guarding the Work of Machines. — The writer rendered the assertion in 1893 that "every machine, as far as practicable, should have its guard." The best examples of this practice are in those multi-sieve jigs which run the first sieves with a thick bottom bed to keep gangue out of the concentrates, and the last sieve with a thin bottom bed to ensure clean tailings by allowing a little of the gangue to go into the concentrates. In other cases a machine may have another one placed after it, the first machine being run to make clean heads while the second is run to make clean tailings.

A general case of this guarding occurs on every machine which makes middlings in addition to the heads and tailings. The middlings product not only serves to catch the included grains which are not ready for final treatment, but it also serves as the guard which receives stray grains of concentrates which would otherwise go into the tailings and stray grains of gangue which would otherwise go into the heads.

On machines like vanners which make no middling product and where the expense of having a second machine act as guard is greater than the saving made, the guarding of the work has to be done by constant inspection accompanied by systematic sampling and assaying.

§ 701. Storing and Shipping Concentrates. — In looking through the mills there seem to be six methods of disposing of the concentrates after they

have been unwatered or settled and dried. Of these the first four ship them in bulk, the fifth uses barrels, and the sixth employs sacks.

(1) The concentrates are wheeled directly to their place of treatment. (2) The concentrates are dumped into open cars direct and go to the smelter. (3) The concentrates are wheeled into cars (usually closed cars) direct. (4) The concentrates are wheeled to store bins which deliver either by gates and chute or by shoveling to cars. When shipped in bulk in cars care must be had that the cars are tight since fine concentrates will run through a hole almost like water. Closed cars are more often employed than open cars as they offer protection from the elements and from theft. (5) The most prominent instance today where concentrates are not shipped in bulk is most of the Lake Superior native copper mills which put their concentrates in barrels as fast as made. In barreling the copper, a boy fills a barrel with concentrates, then runs in water and settles the concentrates by pounding the side of the barrel with a wooden mallet, adds more concentrates and pounds again, and then adds a third batch of concentrates and finally draws a plug at the bottom of the barrel to run off the water. This process greatly reduces the shipping bulk. The reason for barreling in these mills seems to be the richness of the concentrates combined with the fact that part of their journey is by land and part by water thereby requiring considerable handling in transit. The expense of barreling and keeping the barrels (old oil barrels) in repair is considered to be less than the loss which would occur if concentrates were shipped in bulk. (6) In regard to sacking concentrates there are only a few mills in which it can be positively stated that sacks are used. The sacks are usually about 16 × 24 inches in size and hold 200 pounds or less according to the specific gravity of the material. Sacking is expensive and is to be recommended only in special cases; for example, when the ore is very rich, or when it is shipped in small lots, less than a carload, or when it has to be transferred two or three times as from team to railroad and from narrow-gauge railroad cars to broad gauge.

The concentrates should be weighed and sampled before leaving the mill where two companies are concerned. But where the mill and the smelter both belong to the same company this work may be done at the mill or smelter as is most convenient.

The crushing of concentrates is not done to the author's knowledge, in any of the mills in this country. Whatever crushing is necessary before the metallurgical treatment is done at the smelter. In foreign mills, however, according to Kundhardt, the concentrates are frequently crushed down to $\frac{1}{8}$ inch in rolls or Chili mills before sending them to the smelter.

§ 702. Disposal of Tailings. — In the majority of mills the location is such that the tailings go by gravity to the dump where the solid material accumulates and the water runs to waste. Where water is to be used again the tailings go to settling ponds. Where there is not sufficient fall for the tailings to pass off by gravity they are elevated either by sand wheels or by bucket elevators. In some of the foreign mills tailings are unwatered and elevated to a car which is trammed by man power over an extensive dump. This is practicable there owing to the cheapness of labor.

Where coarse and fine tailings are put on the dump together, along with the water carrying them, the tailings pile will spread over a large area and have a very gently sloping surface. If the dumping ground is large, then this does no harm, but in some cases the dumping ground may be limited.

The perspective value of tailings piles often deserves more attention than it receives. Ore dressing is progressing, and conditions are becoming more favorable so that many tailings piles are being treated to-day at a profit which were of no value when they were made. The utility of tailings except for

the possibility of future treatment is generally *nil*. Sometimes they can be used for filling.

§ 703. CARE OF MILLS. — Where the ore treated is rich and there is a large margin of profit a mill may be run in a haphazard way and still make a profit: this is not, however, to be commended. But where the mill is running on ore which barely pays expenses it is only by the strictest attention to details that a balance can be made on the right side of the ledger. The superintendent is forced to keep his eyes open for every little saving and improvement. As a rule it will be found that mill problems have been studied with the greatest care and the greatest advances have been made in the latter class. Hallett says that success in concentrating, even when the mill is adapted to the ore and is in perfect condition, lies in constant attention to detail, unceasing vigilance, plenty of assaying, and ability to adapt the mill to varying conditions. To this might be added experience. Vigilance in every mill is necessary in looking after the men, the machinery, and the supplies. It would be possible to enumerate a great many other points where vigilance is required. In gold and silver mills the condition of the quicksilver must be carefully watched.

In every mill all work should be done as automatically as possible so as to avoid unnecessary handling. Regularity in the rate of feeding, and as far as possible in the quality of the feed, is essential to good work in any apparatus, and will save time, which might be lost from lack of feed or from repairing injuries due to over feeding.

Irregularity of output resulting from irregularity of feeding is often a cause of much annoyance. For example, in the case of a cyanide plant which is only just large enough to treat the average amount of ore crushed by a gold stamp mill, the output of the latter may be so variable as to cause losses due either to irregular treatment in the cyanide plant or else to the running of some material to waste without cyaniding.

§ 704. The adjustments of a machine after being once settled upon should be kept as nearly constant as possible and no machine should be expected to run without intelligent care. The quantity and quality of the feed to a machine should be proportioned to the ability of the machine, and it is bad practice to undertake to force the machine or the whole mill since there is great liability that a break-down may occur, or if not the work is inefficiently done, losses are greater, and the net result is little if any gain. Little stoppages should be carefully looked after. In one mill it was found that these stoppages were greatly reduced by simply keeping a record of the cause and length of each; this seemed to put the men on their mettle. In another case where great annoyance was caused by drill points coming to the rolls, this trouble was almost done away with by having the blacksmith refuse to sharpen any drill that was unaccompanied by its broken piece. At the same time the miners were fined for not picking up broken bits.

An economical mill man will look after his old material and not allow it to be thrown away. Among the opportunities of saving in this way which have been considered in previous chapters are the use of old mine rails or old stamp stems for grizzly bars, old boiler tubes for launders, old stamp screens for riffles, old trommel screens for jig screens, old jaw-breaker toggles for pounding blocks, etc., etc. Under this head comes also the saving of values — in the gold stamp mill, for example, by treating in a clean-up barrel the drainings and sweepings of the mill, the burned chips from the mortar, the old rusted screens, etc., or in a silver mill by running all the drainings of the mill through an agitator.

§ 705. PERCENTAGE OF EXTRACTION. — The question, how much can a mill save, or what saving will give the greatest profit, is always asked by the

engineer who is planning to build a mill. There is considerable variation in the different mills, the amount depending upon the individual conditions, as follows:

(1) *The Ease of the Separation.* — An ore with considerable difference in specific gravity between the valuable mineral and the waste, and with the valuable mineral in coarse crystallization and not of friable character, will yield a high extraction. The opposite conditions, however, will make the problem difficult, and reduce the saving, even though extra care is taken in the dressing.

(2) *The Value of the Ore.* — The more valuable the ore the greater is the extraction, as a rule. There are two reasons for this: First, a rich ore justifies more care and expense in the treatment; second, it is possible to reduce the tailings from a rich ore to nearly the same value as those from a poor one.

(3) *The Obtaining of the Maximum Profit.* — This is perhaps the greatest factor of all in deciding the percentage of extraction. The extra care and expense necessary to obtain a high saving may more than offset the extra amount recovered.

The American idea appears to be: simple mill, small investment (in proportion to tonnage), high capacity, reduced cost, reduced percentage of extraction, increased profit per ton, and quick return on the investment. The European idea, in many cases, appears to be just the opposite.

(4) *The Amount of Concentration, or, in other Words, the Purity of the Concentrates.* — It is obvious that the cleaner the concentrates, the greater the losses in the tailings, and consequently the less the saving. Here, again, it is a question of dollars and cents — whether the increased value of high-grade concentrates more than offsets the increased losses in the tailings. Local conditions have to be studied to decide this point; high freight rates will make it desirable to eliminate as much gangue as possible; smelting charges usually decrease as the quality of the concentrates increases, except in cases where the nature of the gangue is such as to make it valuable as a flux; penalties are put upon certain ores by the smelters — for example, on lead ore with over 10% zinc in Colorado, and in order to comply with these requirements it is necessary to sacrifice some of the lead, thereby lowering the percentage of extraction.

§ 706. LIMIT OF CONCENTRATION. — This is, as we have already seen, a purely commercial limit. The mill man should chase the values just as long as the amount recovered yields a profit over and above the cost of getting them; in reckoning this cost, the interest on the investment should be included.

Cases may occur where a mill is built on the instalment plan. Let us suppose that we have an ore in which the valuable mineral is in coarse crystallization. Then the simplest operation would be to crush the ore and jig it straight without any sizing or classification, the products of the jigs being finished products. Such a plant would probably yield the greatest initial catch. The next addition would probably be to introduce sizing and classifying apparatus, yielding products to be treated separately on different jigs. Next, fine concentrators might be added to save the values in the finer portions of the ore, which cannot be treated by the jigs. Each addition would result in a higher percentage of extraction. Attention would probably next be given to the middlings products, and apparatus would probably be installed to treat them — both crushing and washing machinery for the coarse middlings, and washing machinery alone for the fine middlings. Investigation of the slimes might show that it would pay to add a canvas plant to save the finest material. Thus additions might continue for the re-treatment of the middlings just as long as the values recovered exceed the cost of recovery.

The general rule seems to be to save the concentrates as coarse as possible, but to crush the tailings considerably finer before throwing any away. Those

mills in which there is no re-crushing have concentrates saved and tailings discarded both at the same size. Every mill man should see that he has carried his concentration to the limit. Familiar examples where the limit has not been reached in the past are as follows: The Cornish tin mills send away so much value in the tailings that the treatment of them by stream workers is a lucrative business. A similar state of affairs occurs in some Australian gold mills which have little or no concentrating machinery. Canvas plants, treating tailings from gold mills, and other mills in this country, save values which formerly went to waste. Some of the mills at Butte, Montana, re-crush and re-wash jig tailings formerly thrown away.

There are two sources of loss which may occur and which it is proper to speak about here: Valuable fine material may escape by being attached to coarse waste in the form of dust or slime. Comparatively large sizes of concentrates may be carried off into the tailings by greasy flotation.

The mill man will find that his medium sizes of concentrates are generally the richest. The value of the coarse sizes is reduced by the presence of gangue attached to the valuable mineral in the form of included grains, while the fine sizes contain some free grains of waste which are difficult to remove.

§ 707. TENDENCY AND FUTURE. — The tendency is distinctly toward graded crushing, graded sizing, and graded washing. The jigging of larger sizes is being experimented upon until certain mills are jigging 1 to 1½-inch stuff with good results in the prevention of slimes and in diminishing the cost of crushing. Although the invention of the tables of Wilfley type has given some strength to the plan advocated by Hallett and Bartlett of breaking the whole lot of ore to a small size before abstracting any portion of the values, yet this scheme seems destined to be of limited application only, since the former scheme has two great advantages over it: the lump ore is not slimed with its resultant losses, and the power for crushing it is saved.

The future progress to be made in ore dressing will probably be more in the development and perfection of the existing processes and machines than in the introduction of new processes. Not that new processes do not appear — for they are brought out constantly — but their disappearance is usually as sudden as their appearance. The modern wet-concentration method seems eminently suited to most of the problems, but it is weak or altogether fails when there is only a slight difference in specific gravity between the mineral and gangue, or when water is lacking, or when dealing with very fine slimes. Under these conditions it becomes necessary to make use of some one of the special processes given in Chapter XIV. For the separation in such cases a broad theoretical basis is lacking.

The future of ore dressing as it will be affected by the tables of the Wilfley type which have been so successfully substituted for slime tables, vanners, and fine jigs is still undecided. It seems possible that by modifying the riffles and the adjustments, this principle may be applied with success to much coarser material than at present attempted. Time alone will answer this question. It seems certain, however, that the tables of the Wilfley type have not yet reached the limit of their possibilities.

Similarly the author believes, in the light of certain experiments he has made, that slime tables may be used successfully upon coarser sizes than at present.

§ 708. Of all suggestions the author has to make for the future, the one to be particularly emphasized is more experimental study. Hardly a question has been discussed on which our knowledge is complete, and on many it is entirely lacking. Ore dressing is a difficult art, from the fact that no two ores are alike, and a process must be studied out for each. The difficulty of the problem is commonly undervalued. One mill is designed to separate

galena, sphalerite, and quartz in Missouri and another for Colorado, but if either was erected in the other place it would make an entire failure. The Colorado mill treating galena, sphalerite, and quartz has graded crushing and sizing, and crushes everything to ¼ inch or less, while the Missouri mill with the same minerals simply crushes to a limiting size of ½ inch or larger and jigs everything on a coarse jig with open bed and much suction, thus quickly throwing away a large amount of waste and re-treating the "smitten" or remainder on other jigs. The difference is due to comparatively fine crystallization in Colorado and coarse in Missouri, and to the fact that the Colorado ore carries enough silver to justify more expense than the non-argentiferous Missouri ores.

Ore dressing is generally left to self-taught men who may be quick witted, but who, as a rule, do not know what is going on in other parts of the world. They are oftentimes not even backed by the management. They take samples of tailings and send them to headquarters, assays are made and results put on file in the office for the benefit of posterity, but the mill man never sees the results and he is the one man who, by seeing and understanding them, can bring profit to the owners therefrom. Ore dressing should be made a profession. There is often more to be saved by good ore dressing than by anything else about the mine.

§ 709. The slimes question is one point on which the author believes there is much room for improvement. In discussing this question there are two ideas to be considered: first, the means of preventing slimes as far as possible; second, the arrangement for treating such as are unavoidably made.

For the prevention of slimes the use of graded crushing, graded sizing, and graded jigging is probably the greatest help. This has been previously discussed in several places in the book and needs no further explanation here. For the crushing, rolls are to be preferred in general to stamps and most other fine pulverizers. Only on rare occasions, as for the very fine crushing of middlings, is the use of stamps justifiable. As an example of how much material may be carried off as slimes, it is stated that on Rand ores in South Africa, where the pulp from stamps passes over *spitzkasten* which yield spigot products to cyanide treatment and overflow to waste, the slimes in the overflow amount to approximately 40% of all the stamp pulp that would pass through a 90-mesh sieve. Less fines are also formed when crushing is done wet than dry. Screening between the breaker and rolls and also the use of separate rolls for coarse and fine material will reduce the amount of slimes. While graded sizing will save losses by slimes, yet, when carried to extremes, the advantage desired may be lost owing to the large amount of attrition which results from the rounding of the grains in passing the ore over the large number of screens and concentrators necessary when close sizing is used. This attrition causes losses in slimes. Attrition may occur in other ways and to keep it down all unnecessary handling of the ore should be avoided and the necessary handling should be done by proper machinery. For example, the use of centrifugal pumps, especially of the radial-discharge type, is to be condemned for elevating soft ores like galena; bucket elevators would be better.

Slime losses may be reduced by taking care that where the coarse is separate from the fine it be thoroughly done. By exercising this care not only will losses of slimes be saved, but the washing of the coarser material is better and easier done. Examples of losses of slime from its being mixed with coarse ore on jigs which are fed with imperfectly classified material, slime tables and the vanners fed with extremely fine pulp mixed with the coarse. On the slime tables the very fine concentrates are lost off the sand side of the table, while on the vanner they pass down with the tailings. The remedy for both of these losses is to separate out the extremely fine and treat it by itself. Greasy

flotation (see § 3) is a source of slime loss which may be partly prevented by making sure that the ore is thoroughly wetted at the start and that during the course of its treatment it does not have an opportunity to partially dry again.

There are two ways in which the dilution of fine slimes may be cut down: first, by screening to finer sizes, adopting the European limit of 1 to 1½ mm. for the finest screen instead of the 2 to 3-mm. size generally used in this country; second, in cutting down the number of ordinary hydraulic classifiers.

The actual treatment of fine slimes is by no means an easy problem. Some mills settle the whole overflow of their classifiers and send these settlings directly to the smelter without any further treatment. Extremely fine slimes should not ordinarily be treated on a vanner, but rather on a slime table or on a canvas table, because the shaking motion does not allow the fine particles to settle out of the rapid upper layer of water.

§ 710. TREATMENT OF MIDDLINGS. — All the coarser sizes of middlings contain the valuable mineral mostly as included grains; these must first go to be broken finer before they are further treated. The finer sizes of middlings have the valuable mineral more in free grains, but they are flat or elongated and hard to separate from the more compact gangue. These require further, slower, and more careful treatment to separate them.

The middlings product is so different in quality from the feed from which it was derived, that it deserves to be treated on a special machine which is properly qualified to handle it. The only conditions under which it is wise to send middlings back to be fed over is where the quantity is too insignificant to warrant installing a special machine for their treatment. Mill men have not, as a rule, sufficiently appreciated this.

On the Wilfley table the middling product is simply elevated back and fed to the table again or goes to another table. The Wilfley table is an especially good instance of middlings used as a guard between the heads and tailings to avoid constant care and attention, since its action is such that the line of demarcation between the heads and tailings is liable to be constantly shifting back and forth over a limited area.

SCHEDULES FOR CALCULATING THE VALUE OF ZINC, LEAD, AND SILVER ORES.

§ 711. FACTS ON WHICH THE VALUE OF ZINC ORES DEPEND. — The value of a zinc ore depends upon many considerations; chiefly, however, upon its tenor in zinc and objectionable impurities such as iron, manganese, and lime which cause corrosion of the retorts; lead and antimony which contaminate the spelter; fluorspar which attacks the acid chambers when the ore is roasted for the purpose of making sulphuric acid; and arsenic which affects the quality of the acid and contaminates the spelter. The value of the ore is also affected by its character, whether oxide or sulphide, and by its physical character, lump ore necessitating the expense of further crushing, and slimes being more expensive to treat than coarser concentrates.

§ 712. TREATMENT CHARGE. — In determining the treatment charge on the ore purchased, the smelter starts with the cost of smelting a ton of ore of average composition such as he intends feeding to his furnaces; to this he adds interest on his investment, a proper allowance for amortization of his plant, freight upon the ore to his works and on the spelter product to its market with allowances for the cost of buying the ore and selling the spelter. This gives the "returning charge" which the smelter must make in buying ore f. o. b. at the mine or mill where produced. The "returning charge" does not include ocean freights from Boston to Antwerp, which in 1904 were $4.70. The "returning charge" on Colorado ores, shipped by the way of Galveston, includes all rail and ocean freight rates.

§ 713. FOREIGN SCHEDULES. — European smelters buy ore in accordance with a sliding scale, which combines three elements, viz.: the price of spelter and zinc content of the ore, which are variable, and the "returning charge" per ton of ore, which is fixed. American smelters compute the value in practically the same way, but in buying a lot usually make a direct bid of so much per ton, or, when purchasing by contract, frequently employ a sliding scale which, while equally fair, is less simple than the European method.

The smelters of Belgium, Holland, France, and the west of Germany employ the formula $V = 0.95\ P\ \frac{T-8}{100} - R$, in which P is the price of spelter (good ordinary brands) at London, T the units of zinc in the ore, and R the "returning charge" per ton of 1,000 kilograms. This formula gives the price of ore per ton of 1,000 kilograms.

The formula works out as follows in the case of an ore assaying 48% zinc, the London price of spelter being assumed at £20 per ton of 2,240 pounds, and the returning charge £2 — 12*s.* — 6*d.* per ton of ore.

$$0.95\ P = 0.95 \times £20 = £19.0$$
$$\frac{T-8}{100} = 0.48 - 0.08 = 0.40$$
$$R = £2 - 12s. - 6d. = £2.625$$
$$£19.0 \times 0.40 - £2.625 = £4.975 = \$24.18$$

The same problem could be worked out equally well in dollars and cents.

The "returning charges" which have been made by European smelters on American, Australian, and Canadian ores during the last few years have ranged from $11.40 to $13.16 per 2,000 pounds.

§ 714. WESTERN ZINC ORE PRICES. — The Western smelters of the United States, in their ore contracts, employ sliding scales of the following character:

(1) *Basis of Settlement.* — Ore delivered at smelting points in Kansas. When spelter is 6 cents per pound at St. Louis, pay $25 per ton of 2,000 pounds for ore containing 47% zinc, plus 75 cents per unit for zinc in excess of 47 units, less 75 cents per unit for zinc below 47 units; with 35% of the variation in the price of spelter. These are prices paid for Western ores of a smelting grade and are all made f. o. b. the smelting point (Kansas common points). It is understood that these prices may be cut should an ore be objectionable, due to either the presence of lime, fluorspar, a high percentage of iron, silica, or lead, or should its physical condition be such as to cause an abnormal loss in smelting. On the other hand, a smelting company may pay slightly more for a very desirable ore.

The following schedule for calculating the value of low-grade zinc ores for milling purposes in the San Juan, Leadville, Montezuma, and Breckenridge Districts of Colorado is in actual use by the operators to-day.

(2) *Basis of Settlement.* — Value per ton, $7.60, basis $6 spelter, for 30% zinc with variations of 60 cents per unit zinc up or down, also variations as follows as price of spelter ton varies:

Percent. Zinc.		Percent.	
26–27	add or deduct.	10	variations spelter value.
27–28	" " "	11	" " "
28–29	" " "	12	" " "
29–30	" " "	13	" " "
30–31	" " "	14	" " "
31–32	" " "	15	" " "
32–33	" " "	16	" " "

These are prices paid for low-grade Western ores for milling purposes and are

made f. o. b. the milling company's plant. The milling company produces zinc concentrates which usually meet with a ready sale at prices approximately as shown in schedule (1); nevertheless the losses in milling are heavy and the silica-iron-tailings product, carrying from 7 to 14% zinc, finds little sale and usually goes to the dump as waste material.

§ 715. JOPLIN ZINC ORE PRICES. — Zinc ore prices in the Joplin, Missouri, district are controlled, to a certain extent, by the spelter prices, but are further affected by competition between the ore buyers representing the different smelters. The basis price is that offered by the buyers for sphalerite concentrates assaying 60% in zinc, 1% or less in iron, and not exceeding 0.25 to 0.5% in lead.

The value of the ore is then determined by assay. To the basis price $1 per ton is added for each unit in excess of 60% and $1 per ton is deducted for each unit below 60%. There is also deducted $1 per unit of iron in excess of 1%. Special penalties are imposed on ores carrying an excess of lead and these are usually applied by offering a lower basis price.

Special premiums, usually from $1 to $2 per ton, are paid for ores assaying from 62 to 63% zinc when wholly free from lead. Such ores are, however, usually bought on a flat price.

§ 716. PRECIOUS METAL VALUES. — The addition which is given to the value of a zinc ore, by a silver content, is often of interest. In treating a zinc ore by the ordinary smelting process a lead and silver or gold content can be recovered; but whether this will be done or not is largely a matter of costs. In roasting a zinc ore previous to smelting there is only a small loss in zinc, 1 or 2% at the most, but the lead and silver losses are high, 10% or over. In retorting there is a further loss in lead, but no great loss of silver or gold. The retort residue may be treated to recover lead, silver, and gold provided these are present in sufficient quantity to make their recovery worth while. There are three alternatives:

(1) The entire product can go to the lead smelter.

(2) Residue may be treated as crude ore, crushed and concentrated by jigs, etc., and the concentrates go to the smelter.

(3) Residue may be crushed and jigged for the removal of the unburned coal, the remainder being passed on to the lead smelter, while the coal is utilized in various ways

At any event it is clear that in the treatment of a zinc ore for the recovery of silver, either the losses will be high or the cost high, and the smelter cannot afford to pay for silver and lead more than a small portion of their assay value. European smelters will only pay for 60% of the silver and then only when the silver is in excess of 5 ounces per ton, and nothing for lead except in excess of 8%.

§ 717. LEAD ORE SCHEDULES. — In the Coeur d'Alenes the smelters pay about as follows for lead ores: Ore f. o. b. at the mine or mill pay for 90% of the lead at 90% of the New York price, or 81% of the full quantity and price when lead sells at 4.10 cents per pound or under. When the price rises above 4.10 cents per pound the smelter pays 81% and one-half the additional price. Thus if lead sells at 4.50 cents per pound, the smelter pays 81% of 4.10 plus one-half of 0.40 = 3.521. The smelter pays for 95% of the full value of the silver. A freight and treatment charge of $16 a ton is deducted from the value of average concentrates in the district.

§ 718. In southeastern Missouri the lead ore may be sold to the local custom smelters who will pay for 90% of the lead at current quotations and charge from $6 to $8 per ton ton for smelting charges. These prices are f. o. b. at the smelters and about the same price can be obtained by shipping the ore to the smelters at East St. Louis, the freight to the latter point being about $1.50 per ton.

§ 719. FACTS ON WHICH THE VALUE OF COPPER CONCENTRATES DEPEND. — In concentrating any ore of copper, the object is to make a product suitable for the copper smelter, and on this account pyrite is not a detriment, as it assists in forming a matte, and the iron is useful in the subsequent processes of treating the matte.

§ 720. THE PRICE AT WHICH PROFIT VANISHES. — The Federal Mining and Smelting Company's report for 1907 shows a net profit of $2,232,249, after taking out a "development account" of $300,000. This came from 130,373 tons of concentrates containing 3,689,298 ounces of silver (worth 68 cents per ounce or $2,508,722.64) and 59,746 tons of lead (worth $116 per ton or $6,930,536), the total gross value being $9,439,258.64. On this output the profits amount to 23.6% and the costs must therefore be 76.4% giving an apparent cost for lead of 4.43 cents per pound and for silver of 51.95 cents per ounce.

At first thought one is apt to assume that with costs the same the company would receive no profit unless the prices were above 4.43 cents for lead and 51.95 cents for silver. How false such an assumption would be appears from the following.

The Coeur d'Alene Mining Companies, of which this is one, do not smelt their own concentrates, but sell them to smelting companies, under contracts as given in § 717. Applying this rule to the output for 1907 we find that the cost of producing concentrates was $23.39 a ton, thus:

	Selling Price.	Contract Price.
Lead	5.80	4.171
Silver	68.00	64.80

916.54 pounds of lead	at	4.171 cents =	$38.23
28.298 ounces of silver	at	64.60 cents =	18.28
Total value per ton			$56.51
Freight and treatment charge			16.00
			$40.51

130,373 tons at $40.51 = $5,281,410.23
Profits = 2,232,249.00
Total cost of production $3,049,161.23

$$\frac{\$3,049,161.23}{130,373} = \$23.39 \text{ cost per ton produced.}$$

Now let us see what would happen to the Federal Mining and Smelting Company were the prices reduced to the point where profits apparently vanish according to 1907 experience. The concentrates contained: lead, 45.827%, 916.54 pounds, and silver, 28.298 ounces per ton. The value is figured as follows:

	Selling Price.	Contract Price.
Lead	4.41	3.426
Silver	51.95	49.353

916.54 pounds of lead	at	3.426 cents =	$31.40
28.298 ounces of silver	at	49.353 cents =	13.97
Total value			$45.37

On this our costs are:

Freight and treatment charge	$16.00
Mining and milling	23.39
Total	$39.39

We have a profit remaining of $5.98 per ton. This on 130,373 tons would be $779,630.54 or 34.9% of the profit at 1907 prices. On this basis we may figure the real vanishing point for lead as follows:

Let the silver price remain stationary and we shall have in our concentrates silver worth $13.97. Our cost is $39.39; therefore 916.54 pounds of lead must be worth $25.42 or 2.773 cents per pound. But as this is only 81% of the selling price the latter will figure 3.421 cents. It would seem, therefore, that we have reached the vanishing point of profits as far as the Federal Mining and Smelting Company is concerned, with lead at 3.421 cents and silver at 51.95 cents in New York.

But this deduction may also be wrong as the company has a chance to select its ores and produce a higher grade product. Suppose it produces from its more favorable mines only 65,000 tons of concentrates instead of 130,373 tons and that the selected concentrates carry 56% lead and 38 ounces silver. Suppose this ore costs 10% more for mining and milling and 12.5% more for freight and treatment and we have a cost of

Mining and milling	$25.73
Freight and treatment	18.00
	$43.73

But the ore will be worth as follows:

Lead, 1,120 pounds at 2.773 cents	$31.06
Silver, 38 ounces at 49.353 cents	18.75
	$49.81

Thus we have a profit per ton of $6.08 still or $395,200, and in addition the company is keeping in its mines a very large amout of ore that may be available at better prices. With the above grade of concentrates, supposing that silver remains the same, the vanishing point of profit on lead will be reached at 2.230 cents by contract or 2.753 cents at New York.

Even yet we have not reached the limit of the company's resources. It is safe to say that if lead had to be sold at 3 cents per pound, supplies to the mines would be cheaper and wages could be reduced.

Costs.

The nature of a text book does not seem to require that detailed figures on the cost of erecting and running mills be given, and on this account the author will only give in this book a general discussion of the factors governing the construction and operating costs of mills.

§ 721. Cost of Erecting Mills. — The original cost of erecting a mill depends upon the following conditions:

(1) The capacity of the mill. The cost increases with the capacity, but not in direct ratio.

(2) Mill site and the general nature of the mill. A steep sloping mill site will require expensive masonry retaining walls, and costly grading, which are not required if the mill is on a flat or gently sloping site. Upon the mill site will also depend the cost of the equipment for getting and storing water and bringing it to the mill, for bringing ore to the mill, for shipping concentrates, and for disposal of tailings.

(3) The internal details of the building (in grouping and placing various machines together) and the choice of the materials used in the construction. Some mills use heavier machinery than others, and hence require heavier construction. Some mills need to be much more carefully built to withstand the elements than others.

(4) Cost of machinery at the foundry.

(5) Duties and commissions paid on it, if any.

(6) Cost of railroad freight and transportation from the nearest railroad station. This latter is often a very large item.

(7) The local cost of labor and timber and other structural materials delivered.

(8) The efficiency of the labor employed in erecting the plant.

(9) The period at which the mill is built, the cost being more at a time of general prosperity than at a time of business depression. Improvements can be made with the least cost in dull times; on the other hand, mills can be run with the greatest profit in flush times.

(10) The duration of time that the works are under construction, depending more or less on the willingness and ability of the company to make a heavy outlay in a short time, or to distribute the outlay over a longer period. A mill will cost more when it is required to be finished within a short specified time, than when the builder is allowed to take his time. An extremely long time of construction may be objectionable, however, on account of the loss of interest on idle capital and of the earning power of the mill.

§ 722. Cost of Milling. — The cost of milling will vary greatly in the same locality, and will depend upon the following considerations:

(1) The general design and internal arrangements of the mill building for economizing labor and simplifying the plant, depending to a great extent upon the selection of a suitable site and its proper utilization, also upon the heaviness of construction and care in erection.

(2) The general nature of the process, depending upon the kind of ore to be treated. The finer the crushing and the more complicated the plant the more costly will be the operation. Iron ores are washed by a simple plant at a cost of only a few cents per ton, while the treatment of silver ores by the combination process usually costs at least $1 per ton. It is clear from this how important it is that the selection of the process be made only after thorough tests.

(3) The capacity. The larger the capacity of a mill the smaller will be the cost per ton, since many items of expense, such as management, skilled labor, taxes, insurance, etc., are fixed charges and increase very little with increased capacity, and even common labor does not increase in proportion to the tonnage. Also there is a saving in a big mill from the buying of supplies in large lots and the making of repairs on a large scale. Increasing the capacity of a mill may, by cutting down cost, allow poorer ore to be treated. This will cut down the average yield, and at the same time the profit per ton, but the total profit with the larger quantity and lower yield per ton will be greater than the total profit with the smaller quantity and the higher yield per ton.

(4) The continuity of running. This is a great factor in cost. A mill that is idle half the time has to keep much of its labor on the pay roll, so that the monthly expense will not be in proportion to the time run. If the mill is idle for the purpose of repairing breakdowns, it may happen that the total monthly expense, including repairs, will be greater than the cost of running the mill continuously for a month. The above facts call attention to the evil of building a mill too large for the ore supply or of building any mill until the ore in sight warrants it. There often are exceptions to the last statement, where the cost of running a small mill part of the time is less than that of shipping the ore to a distant custom mill.

(5) The efficiency of the labor employed, and its cost. In a large mill the labor is more effective, since it is more specialized, the skilled labor and unskilled being engaged in their special lines all the time, while in a small mill the skilled labor either is idle part of the time or else engaged in doing lower class work. In large mills automatic devices saving labor are more used. It is best to avoid cheap skilled labor as a rule, for by paying higher wages, more intelligent men are secured who will be better satisfied and will be more than worth their extra cost. By having intelligent skilled labor it will be found that many improve-

ments will be made and costs will be reduced, which are not so likely to occur with cheap skilled labor.

(6) The quality and price of supplies, fuel, etc., used. Supplies cost much more delivered to a mill in a remote district than to a mill near the railroad.

(7) The power employed and its method of application. Many California mills obtain water at a low cost, while the mills in the Black Hills have to use steam power at quite a large expense.

(8) The situation of the works as regards water supply, transportation of ore from the mine to the mill, and the disposal of tailings. A mill located at the mine and having ample room for a tailings dump saves the cost of hauling the ore to the mill and of hauling away the tailings.

(9) The specific gravity of the ore. In figuring cost per ton the specific gravity will affect the result considerably since heavy ores are treated as rapidly by volume as light ones, and therefore more rapidly by weight.

(10) The efficiency of the general management. This is perhaps the most important of all. The management requires technical skill in order to take advantage of every scientific improvement; and business ability in order to proportion wages in all departments, according to relative efficiency and usefulness; and to discriminate in employing the right man and the proper materials in the right place, and in putting on or knocking off an employee. The management must serve as the agent of capital on one hand, and the controller of labor on the other, and prevent strife between them; at the same time maintain discipline and inculcate a spirit of loyalty and harmony throughout the whole working force.

(11) Marketing the products. Another factor that is often of considerable importance is the commercial matter of marketing the products. This is sometimes done by contract with selling agents; and sometimes by the company itself. In either case there is to be taken into consideration, in addition to the cost of marketing, the success achieved in disposing of satisfactory quantities of the product. It is in this respect particularly that the cost of milling may be greatly influenced through the effect produced by this factor in determining the volume of operations.

ACCOUNTS AND REPORTS.

§ 723. In mining and milling the manager should so organize his accounts that he can tell periodically — once a month is commonly found to be a good interval — what have been his expenses for labor and supplies and other things, and what his income from the sale of ores, concentrates, or metals. The comparison of these, when properly interpreted, will tell him whether he is making or losing money.

As milling is simply a subdivision of the whole account system of the mine and mill, the author will not attempt to deal with it alone, but will consider the whole together.

§ 724. There may be three lines along which it will be desirable to have records.

(1) The amount and cause of each item of expense incurred (labor, supplies, and other expense) in order that a total may be summed up periodically; similarly, the amount and source of each item of income. (2) The distribution of the various items among the various subdivisions of the work in order to obtain a periodical summing up of what each part of the work, for example, the milling, is costing. (3) The distribution of the various items of expense and income to the different lots of ore from different parts of the mine in order to determine whether some parts may not be working at a loss which cuts down the profit from the other parts. The benefits of this part of the account system

are generally lost sight of, and it is consequently rarely practiced, but the author believes that where it is practicable it is the most satisfactory method of maintaining a continual test of the mine.

In order to make the accounts complete and to enable comparisons to be made, records of the weights of ore and products have to be kept and the accounts reduced to a common unit, for which a ton of 2,000 pounds commonly serves.

The importance of accounts and reports cannot be overestimated. The extra cost of keeping them will be more than offset by the saving made through their study. They will show the variation in cost and the profit and loss for each branch of the work, and the variation from week to week or month to month. A careful comparison and study of the reports by a manager will result in many little savings and stop many losses through leaks and waste. If time lost and the cause thereof appears in the report blank, the manager is able to locate the responsibility, and by speaking to the foreman the proper remedy will be applied and the time lost will rapidly diminish. If poor concentrating is reported, the foreman will work up to the highest pitch of efficiency. The importance of having these reports all at one central point needs no comment.

§ 725. Many designs have been made for blanks and modes of keeping accounts. Most of these schemes are, however, quite complicated and, as a rule, are applicable only to the needs of the particular plant for which they were drawn up. In any case a true statement of costs should fall under the following broad headings, which may be subdivided as far as is required — usually never too far.

(1) General expense of the company.

(2) Mining
- Exploration and development.
- Stoping cost.
- Stoping and sorting losses.
- Amortization of mining plant.

(3) Milling
- Transportation to mill.
- Operating costs.
- Losses.
- Amortization of milling plant.

(4) Smelting, refining, and marketing
- Transportation to smelter.
- Operating costs.
- Losses.
- Amortization of smelting plant.

TESTING.

§ 726. The choice of a method for treating any ore is very important, for on it will largely depend the question of profit. It is not wise simply to model a mill on a plant which is successfully handling a similar ore; though apparently similar, the two have many characteristics that require quite different methods of treatment. The engineer should make careful examination and tests of the ore, for which various suggestions are given in the following pages. For this purpose he must obtain carefully taken samples from all parts of the mine; and should insist on a reasonable amount of development work before planning a mill. In some mills, only a small part of the value is recovered, in others the cost is excessive, because the methods employed were not intelligently planned. There are also a great many idle mills in which large amounts of capital have been uselessly invested because ordinary precautions were not taken to determine the value of the property or to find the right method of treating the ore. Success depends upon the susceptibility of the ore to treat-

ment and upon the ore dresser's ability to make a wise selection of a process. At Falun, Sweden, a concentration plant extracted only about 75% on a copper-ore and was converted into a lixiviation plant. The early Montana copper sulphide mills and the mills at Broken Hill, New South Wales, were designed by men who had served their apprenticeship at Lake Superior, and contained steam stamps, Collom jigs, etc. After running some time it was found that graded crushing by breakers and rolls would give much better results and so the mills have all been changed over.

If it is decided to build a mill while the mine is in the preliminary stages, the sensible course is to erect only a small plant to treat the ore until the nature and value of the deposit is clearly proved. Another scheme in such a case is to build a mill so arranged that the ore may be tested out in different ways.

In treating this subject of testing, tools and a general discussion of methods are first taken up; then follows a number of systematic schemes to find the best treatment for a new ore. For methods of regular mill testing the student is referred to Ore Dressing, pages 1168 and 1996.

§ 727. CRUSHERS. — For crushing small quantities of ore for examination the hand mortar and screen are invaluable. The mortar may give greater or smaller proportion of fines according to how it is used: if the undersize is sifted out at short intervals during the crushing, the production of fines will be diminished. A little jaw breaker worked by a hand lever, crushing from two inches to one-quarter inch, is convenient for lots of a pound or two. The laboratory size of the Sturtevant roll-jaw breaker is very serviceable for crushing lots of from 10 to 30 pounds to ¼ inch in diameter. A little Blake breaker and a pair of crushing rolls will speedily bring 100 pounds or more to any desired size, and makes the most serviceable plant for this class of work. The sample grinder and the bucking board, which is a horizontal iron table on which the ore is ground by hand with a heavy iron muller, are satisfactory only where extreme fineness is sought, as they tend to make a larger proportion of fines.

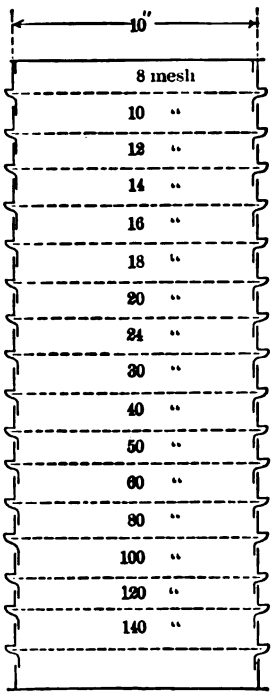

FIG. 297. — NEST OF TESTING SCREENS.

Thayer's small portable one-stamp mill may be useful to indicate whether an ore will probably give good results by stamping and amalgamation. The mortar of this mill is circular in horizontal section, and has an inside diameter of 8 inches. The stamp, with tappet and shoe attached, weighs 45 pounds and has a drop of 6½ to 7 inches. The shoe and die, of chilled iron, are 4 inches in diameter. The discharge opening is 6 × 6 inches. The stamp can be run by either hand or power.

A battery of stamps, weighing 225 pounds each, has proved very satisfactory at the Massachusetts Institute of Technology for making small mill tests on 1,000 to 2,000 pounds of gold ore. Other school and testing laboratories have 500-pound stamps. These are suitable for testing batches of one or more tons of gold ore.

§ 728. SCREENS. — Circular hand screens serve very well for ordinary testing work. A nest of hand screens with a pan at the bottom (see Fig. 297) is very convenient. It allows a sieve scale with large or small intervals to be chosen at will, and the bulk of the sifting to be done at one time. For treating considerable quantities of ore, it is convenient to have a horizontal screen 1 foot wide, 3 feet long, driven by an

eccentric with a 2-inch throw, capable of variation, and suspended by rods so as to have an upward, forward motion on the forward stroke, and a downward, backward motion on the return stroke, thus causing the oversize to travel rapidly off the screen. A whole set of different sizes of screens may be kept on hand and the design adapted to mounting one or more of them at a time.

The choice between round holes punched in plate and square holes in wire cloth is affected by several considerations. There can be no doubt that round holes give the most satisfactory measure as well as the most perfect limit of size of grain, namely the diameter of the circle, while square holes are not really square but may be oblong or trapezoidal, complicating the measure if exact work is desired. On the other hand, round holes cannot be punched smaller than 0.5 mm. in diameter, and if finer sizes are needed in the sieve scale, fine screens with square holes have to be used with all the attendant difficulties of mating square holes to round holes in a series of screens. The author is inclined to prefer round holes for the whole set of test screens where very fine sizes are not needed, and square holes for the whole set where very fine sizes are needed. If only one set of screens is to be used, it should be of square holes.

§ 729. Rittinger's sieve scale, which ranges up and down from 1 mm. by doubling or halving the area of successive holes, is a very satisfactory scale for ordinary commercial or mill tests.

For investigating classifier work the author uses a set of screens with openings expressed in millimeters as follows: 64.0, 53.8, 45.3, 38.1, 32.0, 26.9, 22.6, 19.0, 16.0, 13.5, 11.3, 9.51, 8.00, 6.73, 5.66, 4.76, 4.00, 3.36, 2.83, 2.49, 2.08, 1.63, 1.27, 1.10, 0.97, 0.84, 0.68, 0.57, 0.45, 0.36, 0.28, 0.24, 0.20, 0.15, 0.12, 0.10, and 0.08. As will be noted, the series is geometrical, the ratio of diameters being approximately equal to $\sqrt[4]{2}$ or 1.189, while Rittinger's scale ratio is equal to $\sqrt{2}$ or 1.414.

§ 730. *Act of Screening.* — When a careful sizing test is desired it is best to divide the crushed material to avoid abrasion of the particles incident to passing them through a number of sieves. Thus if one has material that has all been crushed through 2 mm., this may be sieved first on 1 mm., yielding oversize through 2 mm. on 1 mm., and undersize through 1 mm. This undersize can then be sieved on say 0.36 mm., giving finally three sizes, *i.e.*, through 2 mm. on 1 mm., through 1 mm. on 0.36 mm., and through 0.36 mm. Beginning now with the material through 2 mm. on 1 mm., place a small amount of the material on the 1.63-mm. screen and tip the screen back and forth, allowing the grains opportunity to pass through the meshes if they are sufficiently small. Use no washers or other means of forcing the grains through the meshes. After removing the oversize, feed on a second portion of the material and proceed as before. In this way there is the minimum amount of crumbling and the sizing is done in an extremely satisfactory manner. When it is desirable to carry the sizing down to extremely fine sizes, beyond the range of screens, the author uses the settling tube described in § 734.

§ 731. *Wet Screening.* — Ordinary dry screening is hindered because the grains that have about the same diameter as the holes become wedged in the latter; and also because the fines cling somewhat to the coarse portion. The difficulty is lessened by screening under water. Mr. Henry A. Vezin, of Denver, Colorado, has found such a decided difference in the two methods that his screening tests are always made wet. The method consists in holding a nest of about three circular screens in a pail of water and giving them a forward and backward rotary motion about their vertical center. By first screening dry and finishing wet, one can avoid the necessity of drying most of the finest product.

A test showed that a quarter of the material that rested on the 1.4-mm.

screen after wet screening came from what remained above the 2-mm. screen in dry screening. In another case where 28.5% of the ore passed through a 0.43-mm. screen by dry screening, 9.4% more passed through this screen by returning the ore to the different screens and continuing the work wet.

§ 732. *Graphical Representation of Sizing Tests.* — A graphical method of representing sizing tests should, to be of value, show the relative quantities of ore between any two screens more clearly than is done by the tabulated figures. It should also enable one to find the quantities between any two sizes other than those represented by the testing screens.

The arithmetical difference between the largest and the smallest grains fed to any concentrating machine is small for the fine portion of an ore; but for the coarse portion of the same ore the arithmetical difference is comparatively large. The *ratio* of the largest grain to the smallest, however, is approximately the same for both the fine and coarse material. For example, if the ratio was 1½ on the fine jigs in a mill, it would be about the same on the coarse jigs. Hence it is very useful to have a method for plotting in which equal distances on the plot represent equal ratios of diameter; in other words, to represent the diameters on a geometrical scale. This may be done by making the distances on the horizontal scale proportional to the logarithms of the diameters; while on the vertical scale is represented the amounts of ore (expressed in percents) larger than the corresponding diameter on the horizontal scale. Such a plot is usually called a *cumulative logarithmic plot.*

A *cumulative direct-plot* or an *ordinary direct-plot* could be used, but the former causes the plot to be too large, while the latter, although all right for some kinds of data, is misleading when used to represent sizing tests.

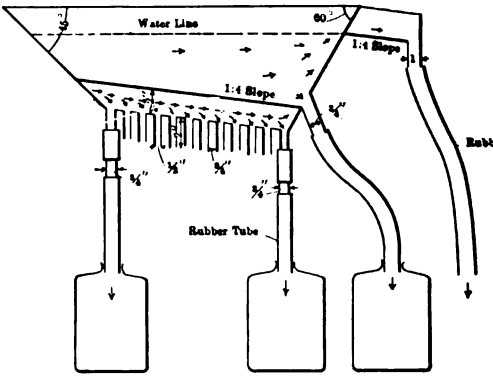

FIG. 298*a*. — 12-SPIGOT CLASSIFIER.

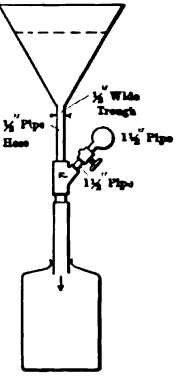

FIG. 298*c*. — END VIEW.

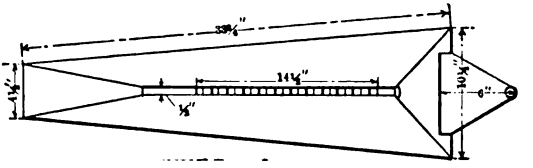

FIG. 298*b*. — PLAN.

§ 733. CLASSIFIERS. — For testing purposes the author uses a 12-spigot closed-spigot classifier similar to one shown in Figs. 298*a*, *b*, and *c*. This classifier as shown is a free-settling classifier. By placing suitable constrictions

UNIVERSITY OF CALIFORNIA

in the sorting columns above the inlet of the hydraulic water the classifier is made to deliver products with hindered-settling ratios. The 12-spigot classifier working with closed spigot uses a small amount of water, is easily regulated and responds promptly to regulation. The rising currents may be calculated and the classifier calibrated so as to deliver a series of closely graded products ranging from coarse in the first spigot to fine in the last. Products obtained in this way are extremely well suited for treatment on the Wilfley table.

In making a series of classified products it is well to have a fixed ratio between the successive sorting currents. The ratio of the Rittinger sieve scale (1.414) will be convenient in some cases. On one occasion the author wanted a series of fifteen currents ranging from 12.5 to 400 mm. per second. Letting x represent the ratio between successive currents, $12.5x^{(15-1)} = 400$, or $x^{14} = 32$, and $x = 1.28091$. Using this ratio gives the currents as follows: 12.5, 16.0, 20.5, 26.3, 33.6, 43.1, 55.2, 70.7, 90.6, 116.0, 148.6, 190.3, 243.8, 312.3, and 400 mm. per second.

§ 734. Bardwell Sorting Tube. — The sorting tube shown in Fig. 299 was designed by E. S. Bardwell to do away with the use of beakers for making settling tests. It is also useful when it is desirable to carry sizing tests to extremely fine sizes, beyond the range of screens. The apparatus consists of a glass tube (1) fitted with rubber stoppers (2) and (3). The lower stopper (2) is perforated and provided with a brass discharge tube (8). The upper stopper (3) is provided with a stuffing box (4), also with a small glass tube (9) for admitting water and a similar tube (10) to allow the air to escape while the apparatus is being filled with water. The discharge tube (8) is closed by the rubber stopper (6). This stopper is provided above with a brass shield (7) and both are securely fastened to the brass rod (5) which is free to move in the stuffing box (4). When making a test the apparatus is held by a clamp so as to be free to turn on a horizontal axis from a vertical position through at least 180°. About 30 grams of the material to be sorted is put in the apparatus, the stoppers adjusted, and the apparatus filled with water and turned about its horizontal axis until the discharge tube (8) is uppermost. The material is allowed to settle until the water in the tube (1) is practically clear, whereupon it is turned end for end and the material allowed to settle say 1,000 seconds. The stopper (6) is then withdrawn by means of the rod (5), and the material which has not settled 500 millimeters in the 1,000 seconds, or material which will not settle 0.5 millimeter per second, may be drawn off into a bottle held beneath the discharge tube (8). The procedure is repeated, allowing the material to settle successively shorter periods of time, varying one from the other in constant ratio. In the case of the first drawings it is necessary to repeat five times in order to be sure to get all particles. Later one or at most two drawings will be found sufficient.

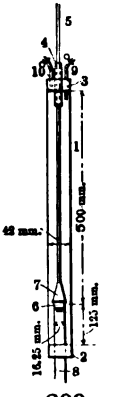

FIG. 299.— BARDWELL SORTING TUBE.

§ 735. Settling Fine Slimes by Means of Dissolved Substances and by Heat. — In sampling mill products that contain slimes carried in water, it should be remembered that the extremely fine particles may not settle in several days or even weeks. However, there are various substances, small quantities of which dissolved in the water will coagulate the particles into comparatively large grains, which settle rapidly. Such a substance should be used in every important case, for the fine slimes are apt to contain a large percentage of the *value*, although they may be very small in *weight*.

The following experiments, made in the author's laboratory, give some exact results with the use of lime, alum, common salt, hydrochloric acid, and sulphuric

acid. The slimes were obtained by stamping a quartz ore from North Brookfield, Nova Scotia, containing some slate, a fractional percentage of arsenopyrite, and some free gold, using a punched screen with slots $\frac{1}{10}$ inch wide and a height of discharge of 4 inches. After passing over amalgamated plates and a vanner, the coarse portion was settled out in small tanks, while the finest slimes were carried into a larger tank from which the water was pumped back to the stamp mill and used again. After the mill run was finished and the water had remained quiet in the large settling tank for half an hour, a large sample of the slimy water was taken from the top of this tank. Fifteen careful tests showed an average of 12.8% suspended matter, the extreme variation being from 12.3 to 13.0%. The results, given in Table 142, are based on this average. The tests were made on one liter quantities in breakers of such size that the water stood $6\frac{1}{2}$ inches deep in them.

TABLE 142. — EFFECT OF DISSOLVED SUBSTANCES IN SETTLING FINE SLIMES.

The figures below show the percents of total slime settled out, by the use of different percents of dissolved substances, in different periods of time.

Time of Settling.	Nothing Added.	Common Salt.				Ammonia Alum.			
		½%	1%	2%	5%	½%	1%	2%	5%
½ hour	22	89	99	100	100	97	98		91
3 hours	72	98	98	100	98	100	100	100	
14 hours		100	100	100	100	100	100		
15 hours									
20 hours	94								

Time of Settling.	Potash Alum.				CaO Present after Adding Lime Water.					
	½%	1%	2%	5%	.00305%	.00595%	.01136%	.02083%	.02885%	.04167%
½ hour	99 (?)	94	98	95	77	95	98	100	100	95
3 hours	99	99	95	96	91	100	100	100	100	98
14 hours	100		100							
15 hours					100	98	100	100	96	
20 hours										

Time of Settling.	Hydrochloric Acid.			Sulphuric Acid.		
	0.19%	0.39%	0.77%	0.15%	0.29%	0.57%
½ hour	100	100	100	100	96	90
14 hours	100			99		

Varying proportions of salt and of alum were added in fine powder and stirred in. Where lime (CaO) was used, it was added as clear (filtered) lime water, in order to eliminate any possible mechanical effect of suspended lime. The lime water contained 0.125% CaO; and the percents of CaO indicated in the table show the amount present after adding respectively 25, 50, 100, 200, 300, and 500 cc. of lime water to 1,000 cc. of the slime. The tests in which lime was used were also stirred, to produce a thorough mixture. In this connection, it should be noted that while the simple addition of even the smallest quantities of lime used caused the slime to agglomerate into distinct grains, a fairly vigorous stirring caused it to form into comparatively large flakes which settled much more rapidly than the grains. Violent stirring, however, tended to break up these flakes and so hinder the settling somewhat. The stirring seemed also to help the coagulation in the case of salt and alum, but it did not produce large flakes.

§ 736. Slimes also settle considerably faster when the water is heated than at the ordinary temperature. A beaker containing slime that would

not settle clear by standing over night was left on the steam table for two hours, when apparently about 25% of the suspended matter had settled out. Another similar sample at the ordinary temperature showed no settlings on the bottom of the beaker at the end of two hours, though the top part of the sample had cleared somewhat.

It does not appear to be known why dissolved substances coagulate and settle slimes, but the following explanation is perhaps the most generally accepted: Molecules of water are attracted to the solids so strongly that there is a permanent film of water on each particle. In the case of fine particles, these films are so large compared with the size of the particles that the virtual specific gravity of the latter is much decreased. Certain soluble substances have a stronger affinity for the water molecules than the suspended slimes have, and therefore the film of water is reduced or even entirely removed. Thus, not only do the particles fall more readily because their normal specific gravity is restored, but, being no longer kept apart by permanent water films, their attraction for each other unites them into comparatively large grains or flakes which settle more rapidly than the finer particles. A good analogy is found in the experiment of dropping a lead bullet and a downy feather in air. The latter may take a hundred times as long to settle as the former, but if they are dropped in a vacuum they reach the bottom together.

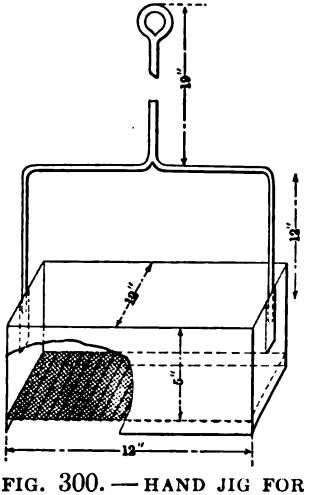

FIG. 300. — HAND JIG FOR TESTING.

§ 737. JIGS FOR TESTING PURPOSES. — For small tests a hand jig with sieve box 1 foot square (inside dimensions) and about 5 inches deep is most convenient. This device is constructed as shown in Fig. 300. It may be suspended from a helical spring by the ring in the top and jigged upward and downward by hand in a tank of water. The products are removed by skimming. A small hand jig with sieve box 6 inches square is very satisfactory. For testing larger lots of ore a single-compartment Richards' pulsator jig with 4-inch pockets is extremely efficient. Where it is desirable to make a hutch product a small Harz jig having three compartments is very handy.

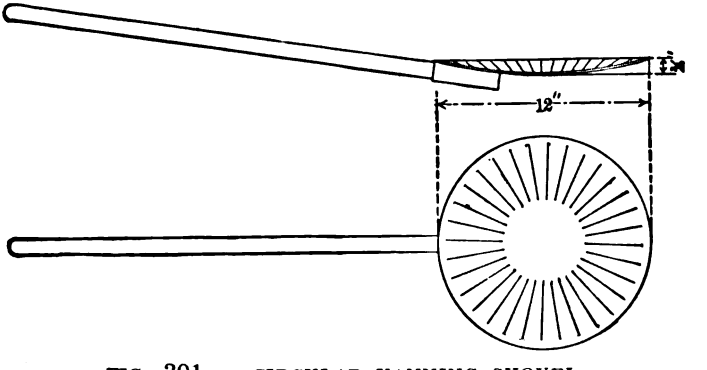

FIG. 301. — CIRCULAR VANNING SHOVEL.

§ 738. THE CORNISH VANNING SHOVEL (see Fig. 301) is used to separate the heavy and light minerals in products from 3 or 4 mm. in diameter down

to slimes, but it is most satisfactory for products finer than 1 mm. It serves to ascertain whether crude ore is susceptible of concentration, whether concentrates contain waste sand, and whether waste sands contain valuable mineral. In using the shovel a small quantity of pulp is placed on the blade with ample water and the shovel is given a horizontal circular motion, by which the heavy grains are settled. The lighter portion of the waste is then washed off by flowing the water across the surface. The circular motion and the flowing are repeated often enough to remove a large part of the light waste sand. Then, with less water than before, the concentrates are brought forward to form a head, by giving a few tosses to the shovel, using a peculiar jerking motion; and the water is flowed over this head by another peculiar motion of the shovel. This tossing and flowing are repeated a number of times to get a thoroughly cleaned head.

The vanning shovel is the most satisfactory tool that has thus far been produced for quickly testing the products of vanners, tables, and jigs. It enables the ore dresser to tell in a minute whether or not his machines are working properly.

§ 739. The Vanning Plaque is of about the same size and concavity as the vanning shovel, but has no handle. It is made of sheet iron, but has a white enameled surface which permits colored minerals to be readily seen.

§ 740. The Gold Miners' Pan is used where a few very heavy grains as of gold are to be looked for in a mass of gravel. The pan (see Fig. 302) is nearly

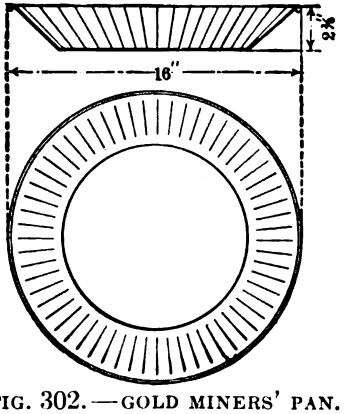

FIG. 302.—GOLD MINERS' PAN.

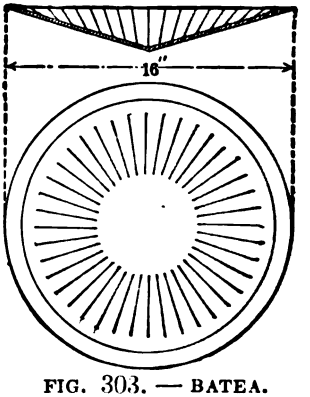

FIG. 303. — BATEA.

filled with gravel which is thoroughly softened up with water; then the pan is shaken sidewise and in a circular manner to give heavy particles an opportunity to settle; water is then flowed across the top, removing the top layer of waste. The shaking and flowing are repeated until the contents of the pan are reduced to a very small quantity and then the gold may be brought out either by tossing it out as on a vanning shovel, or, by running the water carefully around the groove between the bottom and the side of the pan, a head will form and the gold "colors" show.

§ 741. The Batea (see Fig. 303) is worked in the same way as the pan, but the gold or concentrates collect at the center point which is the apex of the cone. Some persons prefer the pan, others the batea, for this work.

§ 742. The Horn Spoon has found special favor in looking for mercury in the pulp from amalgamated plates or pans; but it is too small for general ore-dressing work.

§ 743. Side-Shake Vanner. — A full-sized Frue or side-shake vanner will be found well adapted to testing lots of ore weighing 500 pounds or more.

The ore should be crushed to $\frac{1}{30}$, $\frac{1}{40}$, or $\frac{1}{50}$ inch in diameter; and the adjustments will generally range about as follows: Slope 3½ to 6 inches in 12 feet (for most purposes 4½ inches will do good work); feed water 20 kilograms (about 5 gallons), more or less, per minute; 200 shakes per minute; and a belt travel of 30 to 60 inches per minute dependent on the other adjustments. The speed of travel should be chosen which yields heads nearly free from quartz and tailings free from coarse concentrates.

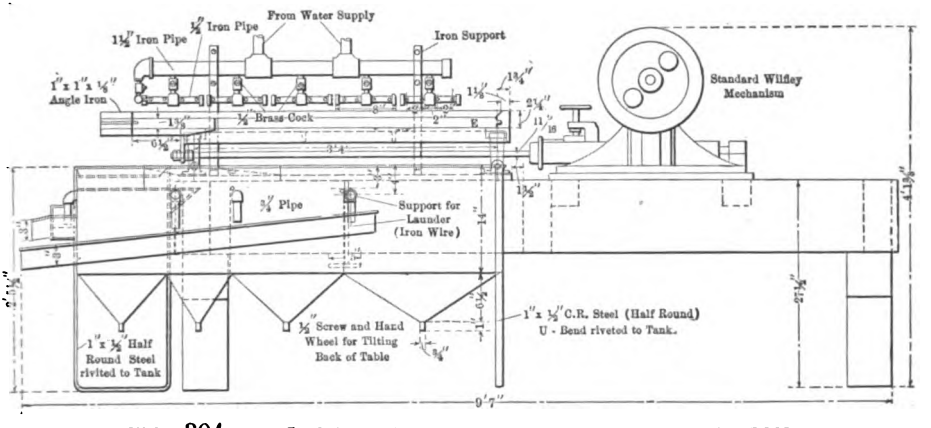
From Water Supply
1½" Iron Pipe
½" Iron Pipe
Iron Support
1" x 1" x ⅛" Angle Iron
½" Brass Cock
Standard Wilfley Mechanism
¾" Pipe
Support for Launder (Iron Wire)
1" x ½" Half Round Steel rivited to Tank
½" Screw and Hand Wheel for Tilting Back of Table
1" x ½" C.R. Steel (Half Round) U - Bend riveted to Tank.
9'7"

FIG. 304*a*. — LABORATORY WILFLEY TABLE. ELEVATION.

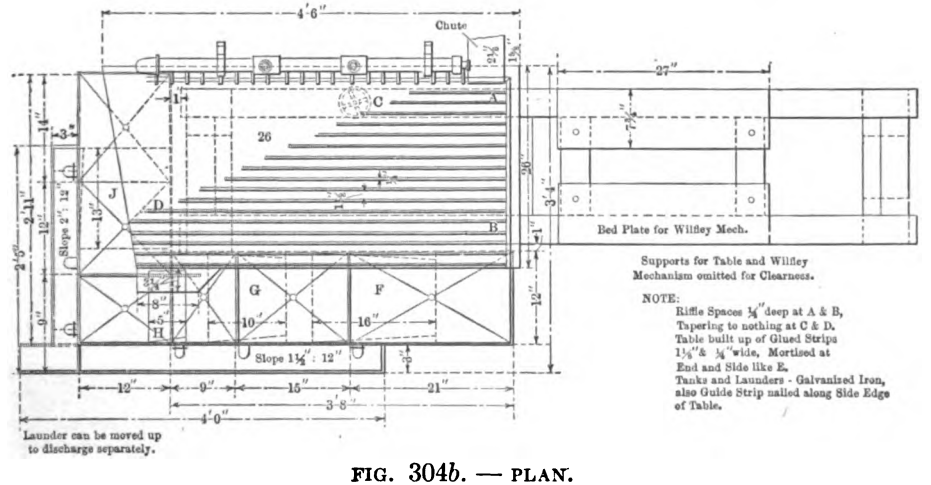

FIG. 304*b*. — PLAN.

§ 744. AN END-SHAKE VANNER with belt 2 feet wide and 8 feet long between centers of end rollers, with wash-water jets 3 inches apart, having a very steep slope (1½ inches in 1 foot), making 240 shakes per minute of ½ inch each, and having a belt travel of 80 inches a minute, is a good design for cleaning up and finishing the fine concentrates of a canvas table.

§ 745. WILFLEY TABLE FOR TESTING. — Figs. 304*a* and *b* show in elevation and plan the small Wilfley table as used in the laboratory of the Massachusetts Institute of Technology. The table top is trapezoidal in form and the diagonal line of the riffle tips is brought to the concentrates side about 8 inches above the corner instead of being brought directly to the corner. This renders it much

easier to divide between concentrates and middlings. The trapezoidal shape of the table does away with the use of a spray pipe at the concentrates side. The table has a capacity of from 50 to 100 pounds of ore per hour, depending upon the size of the material fed. The work done by the table is extremely satisfactory. The table is equipped with the standard Wilfley table mechanism. The other details of the table should be sufficiently clear from the cuts.

§ 746. SLIME TABLE. — A small-sized Wilfley slimer, having only three removable trays, makes a very good laboratory machine for treating fine slimes. The slimer is similar to the larger one already described, but has no sprocket chain for automatically moving the trays, and they are moved by hand at the proper periods.

§ 747. CANVAS TABLE. — A table 10 feet long, 4 feet wide, with adjustable slope, is very satisfactory for testing. It should have a good distributor at the head end, and a tilting tail at the lower end for shunting the tailings into one launder and the heads into another. The grade of canvas that gives the best results will have to be found by trial for each ore; but for pulp with 0.5 mm. and finer grains, No. 6 duck will usually be satisfactory. The canvas holds the concentrates better when the woof (cross threads) is laid down the slope than when it is laid across the slope; and it is best, if possible, to have it wide enough so that a single width covers the whole table.

§ 748. TESTING FOR FLOTATION BY OIL. — The chief principles will be here stated as a guide to those desiring to make small tests. (1) The oil, or residuum, should be sufficiently thick; the thinner mineral oils do not appear to act well. (2) The oil should not be shaken with the water and sand because shaking tends to form an emulsion, from which the oil does not separate well. (3) The water should be added first to thoroughly wet the whole batch and render the gangue immune to the oil. (4) The manipulation should be such as to give all particles of concentrates a good contact with the oil so that they can be coated by the oil and taken up into the oil layer. (5) Enough oil must be used so that the resulting layer of oil and heavy mineral has a combined specific gravity lighter than water. When all these conditions are fulfilled, the heavy minerals that are susceptible of treatment should be obtained in the upper oil layer and be skimmed off with ease, leaving the gangue at the bottom of the water layer.

The operation may be carried on as follows: A tablespoonful of residuum is added to a large beaker of water and then the finely ground ore is introduced and the mixture poured back and forth from one beaker to another for 15 or 20 minutes. After letting it stand to allow the tailings to settle, the oil is poured off, gasoline added to the oil, and the mixture heated to boiling, which precipitates the sulphides. The latter are washed on a filter and assayed; the tailings are also assayed.

An automatic oil-testing laboratory device has been placed on the market by its inventor, J. W. Van Meter of San Francisco, which serves nicely for making tests on small lots of ore.

§ 749. TESTING FOR FLOTATION BY HEAVY SOLUTIONS. — If an ore is crushed fine enough to sever the heavy mineral from the light, and a sample is stirred into a solution that has a specific gravity less than the heavy mineral, but greater than the light mineral, there will be an immediate separation, the lighter mineral floating on the top of the liquid and the heavier mineral sinking to the bottom. Sized products will yield better results than those containing all sizes. The following are some of the solutions that have been used: Klein's solution (borotungstate of cadmium), specific gravity 3.6: Braun's liquid (iodide of methyl), specific gravity 3.3; and Thoulet's solution (iodide of potassium and mercury), specific gravity 3.28. Klein's and Thoulet's solutions can be diluted to a desired specific gravity with water; but Braun's liquid can be

diluted only with petroleum, benzene, or xylene. A saturated solution of zinc sulphate, zinc chloride, or calcium chloride is heavy enough to float some coals away from slate and pyrite.

The specific gravity of mercury is 13.6, that of pure gold is 19.33. Gold will readily sink in mercury when thoroughly wetted by it, while quartz floats upon it.

§ 750. MAGNETIC SEPARATORS. — For general testing purposes there is needed a small electromagnet designed for use either as a high or low-power magnet. For large-sized tests a two-pole Wetherill magnetic separator is, without doubt, the best machine. It may be used either as a high or low-power machine, the rheostat affording extremely close adjustment.

§ 751. *Small Testing Magnet.* — Fig. 305 shows a form of testing magnet that can be recommended for small and preliminary tests. This magnet has two cores of soft iron joined at the top by a yoke of cast iron; the pole shoes, with faces 1 × ⅛ inch, are screwed to the bottom of the cores, leaving an air gap ⅛ inch long between the north and south poles. The magnet is suspended by a screw eye from a spring. Each core is wound with 5,000 feet of cotton-covered No. 21 copper wire making 6,760 coils. The turns are held in place at top and bottom by brass rings and are protected by layers of paper and tarred marline. The winding is such that a current of 0.8 ampere at a pressure of 50 volts gives the maximum of magnetic lines the core can carry without undue heating. When making a test the material

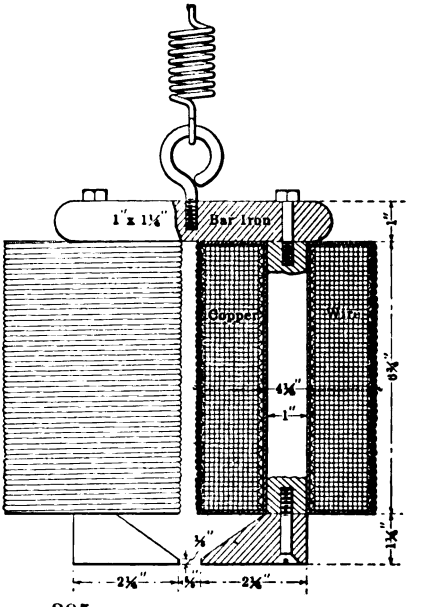

FIG. 305. — DOUBLE-POLE ELECTRO-MAGNET.

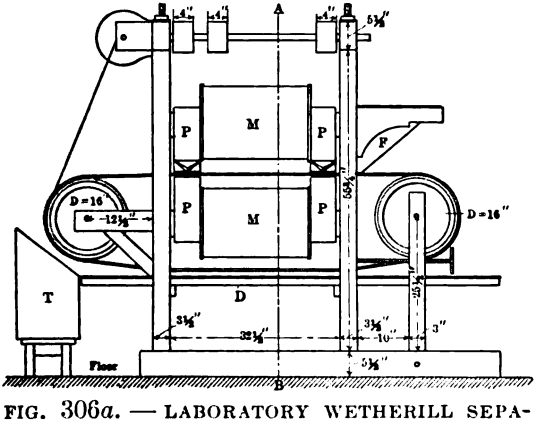

FIG. 306*a*. — LABORATORY WETHERILL SEPARATOR.

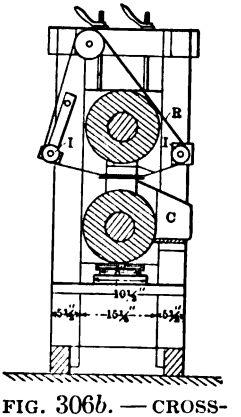

FIG. 306*b*. — CROSS-SECTION.

is spread out upon a piece of glass or glazed paper and the magnet brought over it. The magnetic particles that have been attracted to the poles are removed by holding the magnet over a sheet of paper and switching off the current.

§ 752. *Wetherill Separator.* — Figs. 306*a* and *b* show a small Wetherill sepa-

rator as used in the mining laboratory of the Massachusetts Institute of Technology. As this is very similar to the standard machine described in § 549 of this volume, we need not enter into a complete description of the machine. Each of the magnets is wound for 100,000 ampere turns and the machine is capable of adjustment between 0.01 and 16.32 amperes. Table 143 gives a list of minerals which have been found to be magnetic at the current strength indicated. This list is only suggestive as it needs to be corroborated on many samples of the same mineral species.

TABLE 143. — ACTION OF THE WETHERILL MAGNET ON MINERALS FOUND IN PLACER SANDS, TOGETHER WITH THEIR SPECIFIC GRAVITY.

Non-magnetic.		Separated by Current of ½ Ampere or Less.		Separated by Current of 2 Amperes.		Separated by Current of 3.5 Amperes.	
Mineral.	Specific Gravity.	Mineral.	Specific Gravity.	Mineral.	Specific Gravity.	Mineral.	Specific Gravity.
Iridium	22						
Iridosmium	19						
Electrum	15.6–19.3						
Gold	15.6–19.3						
Platinum	14–19	Platinum*		Platinum*		Platinum*	
Amalgam	14						
Mercury	13						
Lead	11						
Cinnabar	8.1						
Galena	7.5						
Wolframite	7.2–7.5	Cast iron	7.5				
Cassiterite	7	Josephinite	7			Cassiterite (occasionally)	7
Scheelite	6			Hematite	5		
Crocoite	6						
Columbite	5.3–7.3						
Pyrite	5	Magnetite	5.2	Ilmenite	5	Monazite	5
Molybdenite	4.8						
Zircon	4.7						
Barite	4.3–4.6			Chromite	4.3–4.6	Pyrrhotite	4.5
Corundum	4.			Rutile	4.2	Corundum	4
Cyanite	3.6			Limonite	4	Brookite	4
Diamond	3.5			Garnet	3 –4		
Topaz	3.5			Pyroxene	3.2–3.6		
Fluorite	3.25			Epidote	3.5	Spinel	3.5–4
Apatite	3.2			Titanite	3.5		
Spodumene	3.1						
Beryl	2.7			Chrysolite	3.3		
				Tourmaline	3		
				Siderite	3		
				Serpentine	2.5		

* Probably due to iron.

§ 753. ROASTING FOR MAGNETIC SEPARATION.— Occasionally ores or products having in themselves little or no magnetic susceptibility, and which cannot be successfully handled otherwise, require concentration. This may sometimes be accomplished by roasting, with or without carbon, and subsequent treatment on a magnetic separator.

Sulphides are usually given an oxidizing roast, without the use of carbon, and well exposed to the atmosphere; while oxides and carbonates may be given a reducing roast, with carbon, and little exposed to the atmosphere.

Laboratory roasting tests on sulphide ores may be conducted by weighing out a small amount of the ore — say 1,000 grams — and placing it in an iron pan of comparatively large exposed area. The ore should be in a layer ½ inch or 1 inch deep. Place the pan containing the ore over a fire which can be fairly well regulated; a blacksmith forge is excellent as the heat is easily controlled and the hood serves to remove the sulphur dioxide fumes. Constantly stir the ore while heating it and, when it gets hot enough so that the play of blue flames of burning sulphur is seen all over the surface, examine the ore very

carefully to see if there are any "shiners" or unattacked particles of the sulphide left. If so, continue the roast. As soon as no more "shiners" can be seen, cool the material as soon as possible either by putting a little water on the hot ore itself, only as much as will entirely evaporate, or by setting the pan into another receptacle containing water. Weigh the roasted ore and proceed with the magnetic separation.

The ore must be constantly stirred to prevent caking and also to expose all the sulphide particles, while hot, to the oxygen in the air. This roasting forms a superficial coating of magnetic sulphide on the particle, which renders it magnetic even under very weak magnets. If the roast is carried too far Fe_2O_3 results which is not magnetic, and it is to prevent this that the material must be cooled quickly.

In giving oxides and carbonates a reducing roast with carbon, weigh out from 500 to 1,000 grams of the ore and mix in thoroughly from 3 to 5% by weight of finely ground carbon or charcoal. Place in a deep crucible or pot with but little surface area and, without stirring, keep at a dull red heat until all the carbon is consumed. Cool and weigh as in the case of the oxidizing roast. This usually results in a lumpy, cakey product which is rather hard to do anything with and consequently the reducing roast is generally unsatisfactory. If the ore is stirred during the roast an approximate result is obtained, without lumps, but this is also unsatisfactory. A satisfactory reducing roast can only be obtained by exposing the ore for a short time to the action of reducing solid or gaseous carbon, at a red heat and with complete stirring, and then chilling instantly on cold iron or otherwise.

§ 754. AMALGAMATION. — An amalgamation test for gold may be made in a gold miner's pan by mixing the crushed ore with water, adding a few grains of mercury, and thoroughly agitating for a considerable time. If water is used on the bucking board or in the hand mortar during the crushing, the gold will probably be brighter and amalgamate more readily. The addition of a minute quantity of sodium to the mercury will make it still more active in catching the gold. After the mercury has caught all the gold it will, it is separated by washing off the sand; then dried and distilled, and the impure gold so obtained can be purified by cupeling and parting according to the usual assay methods. Where the amalgam is clean and small in amount it is more economical to treat it with nitric acid which dissolves everything but the gold, and thereby reduce the number of operations to one; this is not applicable when silver and gold are both to be determined.

A test on a larger scale may be made by the use of an *amalgamated copper plate* of suitable size which has been prepared with bright, clean silver amalgam. The ore fed to this should come from a small stamp or some machine crushing wet which will brighten the gold preparatory to feeding it upon the plate. After the test the copper plate can be washed off clean by water and the gold valued by scraping the plate carefully to save the amalgam, which is then dried, distilled, cupeled, parted, and weighed. To treat the pulp from the battery of three stamps weighing 225 pounds each, the author uses an amalgamated plate 6 feet long and 2 feet wide.

§ 755. BALL MILL TEST. — A little clean-up barrel has been used successfully for small amalgamation tests at the Massachusetts Institute of Technology. It has an inside diameter of 16 inches and runs at 15 to 20 revolutions a minute. Iron balls, 2 inches, 1 inch, or $\frac{3}{4}$ inch in diameter, are introduced with the sand, to brighten the gold. The mercury is fed either at first or after the grinding has proceeded for some time, as seems best for the particular ore under treatment. The ore, in the condition of sand, $\frac{1}{10}$ inch in diameter more or less, is charged with water through the side opening. After the machine

has been run from a half hour to three hours, as desired, the pulp and mercury are discharged into one or more gold miner's pans by removing the screw plug. The amalgam is panned out, cleaned, dried, retorted, cupeled, parted, and weighed.

§ 756. BOTTLE AMALGAMATION. — In testing the black sands of the Pacific coast for gold, platinum, and iridosmium, the following has been used very successfully.

A kilogram sample of each product of the concentrating tables is mixed with water in a 2-gallon bottle. To this is added a small quantity of sodium amalgam, and after mechanical agitation by revolving endwise in a mechanical agitator, making 30 revolutions a minute, for about thirty minutes, it is found possible to extract practically all the free gold, platinum, and iridosmium. It has been found that the platinum and iridosmium will stick to the sodium amalgam as long as the sodium is not all converted by water into sodium hydroxide. When the sodium amalgam is so converted, the platinum separates out. As in some instances the gold has been found to be so coated with martite and other oxides of iron as to defeat amalgamation; each product is also examined by fire assay to determine the total gold and platinum.

This method may be applied to the determination of the precious metal values contained in other low-grade products where the gold, silver, platinum, etc., exist chemically uncombined.

§ 757. PAN AMALGAMATION FOR SILVER. — Small lots of silver-bearing ore may be treated in a small cast-iron amalgamating pan supported on iron legs to permit heating with a lamp beneath and provided with a muller or grinder which should revolve from 120 to 150 times per minute. The pulp should be crushed to pass through a 40-mesh screen before being charged. The various methods of running an amalgamating pan may be tried, using preliminary grinding with muller down, heating the pan, adding common salt and sulphate of copper, adding acid, etc., followed by final stirring and amalgamation with the muller up, using such quantity of mercury as seems wise, adding zinc amalgam, sodium amalgam, alkali or any of the other reagents that may be preferred. The amalgam may be panned out in a gold miner's pan, retorted, melted, weighed, and valued; and the tailings collected on filters, so as to lose none of the finest portions, can be dried, weighed, and assayed. The assay of the tailings compared with that of the original ore will be found to yield a better valuation of the efficiency of the process than the actual yield of precious metal in the amalgam.

§ 758. CLINOMETERS are used to measure slopes. A carpenter's level and foot rule will answer for most cases, and will give inches fall in 12 inches distance, which is a common mode of measuring and stating the slope. The dealers in surveying instruments have little clinometers for measuring slope angles in degrees. A very good one is that known as Linton's level, sold by Queen & Company of Philadelphia. It measures all angles from horizontal to vertical down to the nearest 5 minutes of angle, and it is well and substantially made.

§ 759. FILM GAUGE. — The gauge, shown in Fig. 307*a*, is useful for measuring the thickness of water films on tables. The needle *a* can be raised and lowered by the micrometer screw *d*, which reads zero when the point of the needle is exactly in the same plane as the lower ends of the legs *b*, *b*, *c*. The feet *b*, *b* should be far enough apart so that the waves *e*, *e* (see Fig. 307*b*) shall not back up and change the depth when the water is flowing in the direction indicated by the arrows *f*, *f*, *f*. The point *a* is lowered until contact with the water is just obtained, and then the reading gives the thickness of the water film. The usual form of micrometer gauge may be made over as indicated in the sketch, and give a reliable tool for this work.

§ 760. SPECIFIC GRAVITY TEST. — Determinations of specific gravity are valuable to the ore dresser in several ways. They may show that the minerals are too near to each other in specific gravity to be well separated by methods depending upon that property; or they may show that the specific gravities of the minerals are far enough apart to suggest better work than he is doing and so start him on a hunt for a remedy; and finally, since the specific gravity of mixtures of the heavy and light materials ranges all the way from the specific gravity of the former to that of the latter (in proportion to the percentage of the two minerals), it follows that a determination of the specific gravity of a two-mineral product may serve as a rapid approximate assay of value. This method is recommended by Rittinger, and is used at Tarnowitz, Silesia. The method of computation is quite simple and is indicated here:

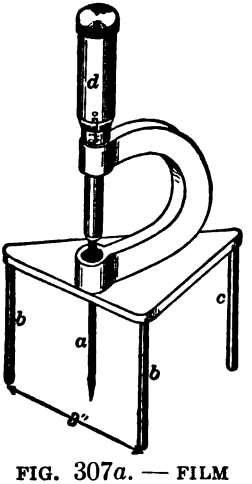

FIG. 307*a*. — FILM GAUGE.

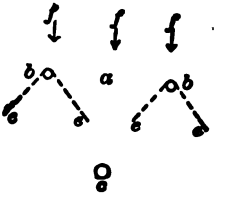

FIG. 307*b*. — WAVES FROM FEET.

Let a be the specific gravity of the heavy mineral; let b be the specific gravity of the gangue; let s be the specific gravity of the product; let x be the percent. of the heavy mineral. Then $x = \frac{(s-b)\ 100}{a-b}$. As an example let us assume a mixture of quartz (specific gravity 2.6) and galena (specific gravity 7.5) with a net specific gravity of 3. Then $x = \frac{(3-2.6)\ 100}{7.5-2.6} = 8.16\%$ of galena in the product. This method is not accurate enough to be of use when large value is contained in a small weight of mineral, as in the case of dry silver ores.

§ 761. MICROSCOPE. — A microscope is a very great help to the ore dresser. This may range from a hand lens magnifying two diameters up to a microscope magnifying 250 diameters. With it he can see if the mineral that is puzzling him is in very thin scales and so floats away where, by its specific gravity, he would not expect it to do so; or if it is in very finely included grains in the waste gangue; or again if it is in the finest slimes. In these and many other ways the microscope will explain questions which otherwise baffle the ore dresser, and will thus greatly assist in overcoming difficulties. By using a high-power instrument a rapid approximate chemical analysis of a fine product may be made by counting the grains of clean concentrates, of clean gangue, and of included grains in a restricted field.

§ 762. ASSAY OFFICE. — The whole testing business hinges on an assay

office equipped with complete assay outfit such as is furnished by nearly all dealers in mining machinery. This would include crushing apparatus, screens, furnaces, and balances for gold, silver, and lead ores, and also chemical apparatus for other ores. The samples for analysis should be put through a sieve with 100 or 120 meshes to the linear inch or sometimes finer, and in case pellets of native metal occur which will not pass through the sieve these pellets should be carefully saved and analyzed separately.

§ 763. Weighing and Measuring. — Several remarks are in order here. (1) To get an exact record of the amount of ore treated in the daily routine of mill work, all of the cars would be weighed both full and empty. The difference shows the net weight of ore. The percentage of moisture should be determined by means of a moisture sample, and the weight of dry ore can then be calculated. In commercial work the need of saving time and cost often causes the substitution of measuring for weighing. The weight of a car load of ore having once been obtained, a tally of the number of cars gives the approximate weight of ore delivered to the mill in a given time. Where this method is used the figure adopted for the weight of a car load of ore should be obtained with care by averaging the weights of many car loads, and a new value should be obtained periodically to cover possible changes in the weights of ore and the sizes of cars. A method sometimes adopted is to weigh a few cars taken at random every day and adopt the average weight of ore contained in them as the average of all cars for that day.

(2) The weight of a cubic foot of solid rock, of broken rock, or of sand, will have to be obtained for every mine because of the varying specific gravity of ore as between mine and mine. The weight of a cubic foot of unbroken quartz is 2.64×62.4 pounds $= 165$ pounds, in which 62.4 is the weight of a cubic foot of water at 60° F., and 2.64 is the specific gravity of quartz.

(3) One often needs to ascertain the quantity of a product passing some point in the mill. If the stream can be diverted into a bucket or barrel for a stated time, for example one minute, and this catch repeated a number of times during the day to average up inequalities of work, the resulting catch represents the quantity passing in the total time run. This product is also available for any sizing tests, assays, or chemical examinations that may be needed. Before pouring off the water the fine slimes should be carefully settled out, especially if the sample is to be used for assays or sizing tests. Dissolved substances may be used to assist the settling; and in case this is not effective, it may be necessary to filter the decanted water on a cloth filter or in a filter press, and in cases of extreme value even to evaporate the whole of the water. In any case, after pouring off the water, the material should be dried before weighing.

(4) It is often necessary to know the quantity of water passing a point in the mill. This should be diverted a number of times through the day and weighed or measured. If sand comes with the water, the former should be separated, dried, and weighed, and its weight subtracted to get the exact weight of water. If p represents the weight of water, in pounds, then $p \div 62.4$ gives cubic feet, and $p \div 8.342$ gives gallons.

§ 764. One Variable at a Time. — Whether the ore dresser is searching for a process or carrying on regular mill work, he is always experimenting, trying to see if he cannot hit upon some set of adjustments of his machines that will yield better results than those already employed. The importance of varying only one adjustment at a time, establishing the best value of that under the conditions submitted, cannot be overestimated. The moment two or more adjustments are made at the same time the observer is at a loss to know to which the improvement is due. Take, for example, a jig working

upon the first spigot product of a classifier. In establishing the best conditions we can vary the mesh of the sieve, the size of the bottom bed material, the depth of the bottom bed, the height of the tailboard, the amount of plunger throw, and the amount of hydraulic water, ranging all the way from much suction to little suction, from a very free whole bed to a very tight whole bed. We may try to have the jig make its own bottom bed; and work in all the changes in hydraulic water, looking for hutch product free from gangue and tailings free from valuable mineral. Next we may change the throw of the plunger, then hunt again for the best hydraulic water; and a number of these trials will be made until the best throw is found, with its corresponding hydraulic water. We next raise the question of trying a coarser or finer screen. After the first change is made we must again hunt for the best plunger throw and for the best hydraulic water quantity. After trying several sieves, with the throw and water tests that go with them, we may conclude that it is better not to force the jig to make its own bottom bed, but to give it a coarser screen and bring bed material to it. A series of these variations can then be brought in. On looking over the complete record it will be easy to locate the set of conditions which on the whole give greatest capacity and cleanest work, and are therefore the wisest to adopt. In comparative tests of different machines, the same ore should be used for both. This is a point that is often disregarded.

TESTING FOR A PROCESS.

§ 765. While testing for a process, many questions come to the ore dresser. Among them are the following: Should the ore be treated by:

(1) Gravel screen and hand jigs.

(2) Log washer with or without jig and classifier.

(3) Rolls, trommels, classifiers, jigs, and tables or vanners; and under this process come the secondary questions: (*a*) Shall we crush coarse or fine. (*b*) Shall we re-crush and re-concentrate tailings, and from what size to what size. (*c*) Shall we re-crush and re-concentrate middlings, and from what size to what size. (*d*) Shall we re-concentrate middlings without re-crushing and from what size to what size.

(4) Steam stamps, classifiers, jigs, and tables.

(5) Gravity stamps, amalgamated plates, and vanners with or without canvas table and fine vanner.

(6) Rolls and magnetic concentrator, as chief processes or as auxiliary to some other, with low or high-tension magnetic field, with or without roasting.

(7) Cyanide for gold.

(8) Roasting and chlorination for gold.

(9) Pan amalgamation preceded or not by chloridizing roasting.

(10) Hyposulphite leaching following chloridizing roasting.

Other questions might be framed to include phosphate, mica, corundum, graphite, asbestos, coal, etc.

To help in deciding these questions, a number of tests are given below. As many of these should be tried as the circumstances will allow; but of course the ore dresser will use his experience and judgment to decide which promise the most information.

§ 766. MINERAL EXAMINATION. — If representative specimens of each mineral, as well as a general sample of the ore, are analyzed, the percentages of the different minerals can be calculated. In the following examples the different minerals are, for simplicity, assumed to be pure. Let us suppose that we have quartz (100% SiO_2), calcite (56% CaO, 44% CO_2), siderite (48.3% Fe, 13.8% O, 37.9% CO_2), galena (86.6% Pb, 13.4% S), sphalerite (67% Zn, 33% S), and pyrite (46.7% Fe, 53.3% S); and that the general analysis shows Pb

17.32%, Zn 3.35%, Fe 7.085%, CaO 8.4%, SiO_2 45%, S 9.66%, CO_2 8.495%, O (by difference) 0.69%. Distributing these values proportionally among the different minerals gives the results shown in Table 144.

TABLE 144. — MINERALOGICAL PERCENTAGE COMPUTED FROM THE CHEMICAL PERCENTS.

Material.	Percent. in Ore.	Percent. Distributed among the Various Minerals.					
		Quartz.	Calcite.	Siderite.	Pyrite.	Sphalerite.	Galena.
SiO_2	45.000	45					
CaO	8.400		8.4				
Fe	7.085			2.415	4.67		
S	9.660				5.33	1.65	2.68
Zn	3.350					3.35	
Pb	17.320						17.32
CO_2	8.495		6.600	1.895			
O	0.690			0.690			
Total	100.000%	45%	15.0%	5.000%	10.00%	5.00%	20.00%

Assays in specimens of the minerals, chosen to represent the average of the above ore, might be found to show silver as follows:

Galena ..... 100 ounces per ton. Sphalerite ..... 10 ounces per ton.
Pyrite ..... 20 " " " Quartz with a little stain ..... 3 " " "

These multiplied by the percents of the minerals from Table 144 show that in a ton of ore the

Galena contains (100x20%) or 20 ounces silver.
Pyrite " (20x10%) or 2 " "
Sphalerite " (10x 5%) or 0.5 " "
Quartz " (3x45%) or 1.35 " "

The mine ore then has 23.85 " " per ton.

In practice no assays can be made to agree as perfectly as this and the actual assay of the ore will differ somewhat from 23.85 ounces silver per ton.

The above assays and analyses appear to indicate that the sphalerite may or may not be thrown away according to the smelting charges on zinc ore, or the nearness of spelter furnaces; that the quartz would probably be thrown away; but that galena and pyrite should both be saved either together or in separate products, as indicated by the cost of production and the prices paid in the market.

Some ores will be better treated in the examination, as mineral aggregates rather than as pure minerals. A vein may have a streak of very finely disseminated mineral, and another streak of coarsely crystallized mineral. The mine ore can be separated, by screening and hand picking, into three kinds: mine fines, coarsely crystallized ore, and finely disseminated ore. These three can each be weighed up and assayed, and their relative value estimated, and then the question will come up as to whether the finely disseminated ore shall be sent to stamps or jigged with the other; also whether the mine fines shall be treated on a separate set of machines or with the crushed ore.

§ 767. SIZING AND ASSAYING. — If a crushed ore or any other product be sized on a series of screens and all the oversizes assayed, an instructive table can be made of the results, and one which will show in what sizes the values mainly occur.

§ 768. HAND-PICKING TEST. — A sample ore can be crushed, sized on screens, and each size picked by hand into three heaps, heads, middlings, and tailings, — all particles having 50% or more concentrates in them, as estimated by the eye.

being put with the heads, all particles estimated to have less than 50% and more than 5% of concentrates being put with the middlings, and all particles estimated to have less than 5% of concentrates in them being put with the tailings. This hand picking will probably reach a fine limit at about 1 mm. The undersize of the 1-mm. screen can be concentrated on a vanning shovel, a vanning plaque, or a gold miner's pan. The fine slimes will first be floated off, and saved either by the use of a dissolved substance, by filtering, or by evaporating the water to dryness, to save the whole of the slimes. The vanning shovel will yield heads and tailings. Each of these products may then be weighed and assayed. The results may be tabulated as in Table 145 which is made up for the purpose of illustration upon the assumption that 1,000 grams of a copper ore had all been crushed to pass a 16-mm. screen and then sized on Rittinger's series of screens; the weights and assays are also assumed.

TABLE 145. — MODE OF TABULATING RESULTS OF HAND-PICKING TESTS.

	Weight.	Assay in Copper.	Weight of Metal.	Percent. of the Total Metal.
Heads.				
	Grams.	%	Grams.	
On 11.3 mm	50	6	3.000	9.143
Through 11.3 on 8 mm	40	6	2.400	7.314
" 8 on 5.66 "	30	7	2.100	6.399
" 5.66 on 4 "	25	7	1.750	5.333
" 4 on 2.83 "	30	8	2.400	7.314
" 2.83 on 2 "	15	8	1.200	3.657
" 2 on 1.414 "	15	8	1.200	3.657
" 1.414 on 1 "	8	9	0.720	2.194
" 1 mm	20	10	2.000	6.095
Fine slimes	10	7	0.700	2.133
				53.239
Middlings.				
On 11.3 mm	200	3	6.000	18.290
Through 11.3 on 8 mm	120	3	3.600	10.970
" 8 on 5.66 "	25	3	0.750	2.286
" 5.66 on 4 "	10	3	0.300	0.914
" 4 on 2.83 "	5	3	0.150	0.457
" 2.83 on 2 "	2	3	0.060	0.183
" 2 on 1.414 "	2	3	0.060	0.183
" 1.414 on 1 "	1	3	0.030	0.091
" 1 mm	0			
Fine slimes	0			
				33.374
Tailings.				
On 11.3 mm	50	2	1.000	3.077
Through 11.3 on 8 mm	40	1.5	0.600	1.829
" 8 on 5.66 "	70	1.2	0.840	2.560
" 5.66 on 4 "	65	0.9	0.585	1.784
" 4 on 2.83 "	65	0.9	0.585	1.784
" 2.83 on 2 "	33	0.8	0.264	0.805
" 2 on 1.414 "	33	0.8	0.264	0.805
" 1.414 on 1 "	16	0.7	0.112	0.341
" 1 mm	20	0.7	0.140	0.427
Fine slimes	0			
				13.412
Grand total	1,000		32.810	100.025

From this table we may draw the following conclusions:

(1) The ore assays 3.28% copper; and if the work has been carefully done this is a more accurate assay than any single assay could be.

(2) We have saved in the heads only 53.24% of the total original value.

(3) The coarse tailings are much too rich, and therefore the limiting size must be much smaller than 16 mm.

(4) 4 mm. appears to be a safe mill limiting size; that is, nothing should be allowed to go to waste larger than 4 mm.

(5) We can either work the sized products, as above indicated, by graded crushing and graded jigging, using 16 mm. as the preliminary limit and 4 mm. as the final limiting size, or we can crush by graded crushing right down to 4 mm. and then size and jig.

(6) The fine slimes, though amounting to only 1% of the ore by weight, are rich enough to justify considerable care in saving them.

(7) Taking the net average of the 4 mm. and finer sizes, we may assume that the ore can probably yield tailings as low as 0.84% copper and heads as high as 8.11% copper; and we may add the following computations: let r = percent. of metal in the mine ore; let t = percent. of metal in the tailings; let h = percent. of metal in the heads; let x = weight of tailings from 100 tons of original ore; and let $100 - x$ = weight of heads from 100 tons of original ore. Then $x = \frac{100\ (h - r)}{h - t}$ and substituting the above figures for sake of example, we have $x = \frac{100\ (8.11 - 3.28)}{8.11 - 0.84} = \frac{483.0}{7.27} = 66.44$ tons of tailings, and $100 - x = 33.56$ tons of heads. Thus the tests and subsequent speculation indicate that from 100 tons of ore containing 3.28% copper (= 3.280 tons or 6,560 pounds of total copper) we might produce 33.56 tons of heads containing 8.11% copper (= 2.722 tons or 5,444 pounds of copper), and 66.44 tons of tailings containing 0.84% copper (= 0.558 tons or 1,116 pounds of copper), which shows a concentration in the heads of 83% of the total original copper.

§ 769. JIGGING TEST. — An ore that is to be jigged may be crushed by a breaker and rolls, either with or without graded crushing, screened, and classified, either with or without close sizing, and each product treated with suitable adjustments on a jig. In the case of small lots the finest sizes will be concentrated on a vanning shovel; with larger lots they will be treated on a table of the Wilfley type, on a vanner, or on a canvas table. Each product should be weighed and assayed and the results tabulated to assist in drawing conclusions as to the best method of treatment.

§ 770. FINE-CONCENTRATION TEST. — An ore needing rather fine crushing and only a small reduction (perhaps 3 tons of ore into 2 tons of concentrates) has been successfully treated by the author in the following way: Crush by breaker and rolls to pass through a screen with 1-mm. square holes, send to a 3-spigot classifier, and treat on a Wilfley table. The ore contained finely disseminated pyrite (to be used for sulphuric acid manufacturers), a little chalcopyrite, and a quartz-feldspar-mica gangue. The first spigot product was clean pyrite. The second spigot, treated on the Wilfley table, yielded pyrite, chalcopyrite, and gangue. The third spigot and the overflow yielded the same. The fine slimes, being too rich in copper to throw away, were caught in a settling tank and treated as concentrates.

§ 771. *Canvas Tables and Steep End-Shake Vanner.* — If the Frue vanner or Wilfley table is to treat an ore in which the concentrates have a very high value ($50 or more per ton), the question of saving the extremely fine slimes, which these machines lose, rises to commercial importance. The vanner when well run saves all the coarse concentrates, but loses a considerable part of that which is finer than about one-tenth the diameter of the maximum size of grain. If the vanner tailings are treated in a classifier which will just lift the fine, rich grains and let the coarser waste go into the spigot, and the overflow be sent to a canvas table, and the heads of this sent to a little steep end-shake vanner,

a clean, rich concentrate will result; and figures on its quantity and richness and on the estimated cost of running will indicate whether or not this method will pay.

§ 772. FREE-MILLING GOLD ORES may be treated in lots of 1,000 or 2,000 pounds with a breaker, a stamp battery with 225-pound stamps, a copper plate 2 feet wide and 6 feet long, coated with silver amalgam, a mercury trap, a vanner, and a little ball mill.

§ 773. SMALL TESTS COMPARED WITH MILL WORK. — Let us see to what extent small tests can answer questions asked by the mill superintendent.

The Yield. — The small test can tell whether the mine ore will yield much or little concentrates, and whether they are rich or poor. Computation will, from the weight and assay, tell the dollars per ton that can be extracted.

Mill Design. — The small tests enable one to select the kind of machines required for the treatment and to determine approximately the number of them; hence they are a great help in mill design.

Errors. — A small test errs, as compared with mill work, in the fact that it is watched much more carefully than a mill can be. On the other hand there is a starting error while the machines are getting under way, and a stopping error while the machines are being stopped and cleaned up, both of which tend to lower the percentage of metal in the heads, and therefore count to a small extent against the small test. The mill hands are generally so well trained that the mill work should compare very well with small tests; but if the mill manager is forced to over-drive his machines or does not have them properly adjusted, the comparison will be in favor of the small test.

Efficiency of the Process. — The small test will show the percentage of the metal extracted, and whether one process is more efficient than another.

Cost of Treatment. — This depends upon the cost of labor, power, supplies, interest, etc., and the small test will help here only in so far as it points out the kind of a mill that is needed. The ore dresser must depend upon his experience for the rest. Assuming that he is able to estimate cost, then he is in a position to calculate whether or not a mill can be erected and run at a profit, taking into account the ore supply and the depreciation. He can also figure what size of mill will yield the largest net profit in the end.

PART VI.

COAL DRESSING.

The treatment of coal in preparation for the market does not properly come under the heading of ore dressing as coal does not come under the definition of an ore that has been given in an earlier part of this volume. It does, however, come under the heading of mineral dressing, and as the methods that are used are in every way analogous to those that are used in the dressing of ores, it seems best to give the student briefly an idea of the machines and processes that are in use to-day. It is obviously impossible to take up the construction of breakers and the surface arrangements of a coal mine in a brief chapter. To discuss these questions fully would require a volume. The student who is especially interested in this line of work should consult the text-books of the International Correspondence School, in which the whole question will be found treated.

CHAPTER XVIII.

COAL DRESSING.

Coal dressing consists in the removal from coal of the impurities which it always contains as it occurs in nature. The impurities contained in coal are of two kinds: (1) Those that are so intimately mixed with the coal that they form a part of its composition and hence cannot be separated from it by mechanical processes; they include the ash coming from the organic matter from which the coal was formed, all or nearly all of the phosphorus, and that part of the sulphur coming from the same source as the ash. (2) Impurities that do not form a part of the composition of the coal but which are intimately mixed with it. These are slate, bone, and pyrite. Bone, or as it is sometimes called "bony coal," consists of a mixture of coal and slate so interstratified that it cannot be separated by mechanical means. Pyrite, which is the chief source of the sulphur contained in coal, may occur in several forms: (1) Pyrite is usually found in lenticular pieces or in balls, and in this condition it is readily separated from the coal by crushing or by a combination of crushing and washing. (2) The pyrite is sometimes found thinly interleaved with the coal. When this is the case the separation is more difficult and the coal requires finer crushing and careful preparation before the final cleaning or washing. (3) The pyrite sometimes occurs in little discs, like fish-scales. This renders the separation still more difficult. The thin scales of pyrite are so light that they are very likely to be carried over with the coal. They may even float on the water, which fact renders it impossible to use the water over again. Beside the sulphur which occurs as pyrite we may have calcium sulphate or gypsum. This usually occurs in thin plates and its removal is not essential although a portion of it is usually removed in the process of breaking and washing. Sulphur also occurs in organic combination with the coal, probably in combination with carbon and hydrogen. Very little of this sulphur can be removed.

§ 774. Necessity for Washing of Coals. — There are two chief reasons for washing coal: (1) In years past a great deal of coal has been sent to the waste dumps as being too fine for the market. Ways have now been found in which this coal can be utilized and as it is more or less mixed with impurities, washing must be resorted to. (2) Coal that is to be used for coking must be washed in order that the sulphur which it contains may not remain in the coke and cause trouble in smelting operations in which sulphur is deleterious in its effect, as in the iron and steel industry. Some coals are sufficiently free from sulphur so that they can be used for coking without preliminary washing, but the supply of coal of this sort is rapidly becoming exhausted. All coals require more or less preparation for the market in the way of breaking, screening, and the removal of slate and bone.

§ 775. Methods. — The methods that are used in the mechanical preparation of coal are analogous to the methods that are used in the dressing of ores. In many instances the same machines are or may be used for both purposes. The principles involved are the same in any case. The problem differs in

that with ores the heavy minerals usually contain the values while the lighter minerals are waste. In the case of coals the coal is the light mineral and the heavier substances are impurities which the washing or dressing process is designed to remove. This fact requires different design in the case of some of the machines, the principle of action of which, however, remains the same. As there are certain differences between the methods used in the treatment of bituminous coal and those used in the treatment of anthracite coal, it seems best to take these up separately.

Bituminous Coal Practice.

The operation of dressing bituminous coal may be divided into three parts: (1) Crushing the coal. This serves to reduce the size sufficiently to free the greater part of the impurities in the coal from the coal itself. (2) Preparation for washing. This includes the sizing and classifying that is done to render the work of the machines more effective. (3) Washing. This is entirely a mechanical process and water is the medium employed in effecting the separation. The chief requirements are that the sulphur in the coke that is made from the coal shall not contain over 1% of sulphur and not over 6 to 10% of ash. A small amount of sulphur is burned off in coking, but as it takes 1.6 tons of coal to make one ton of coke, the sulphur in the coal must be kept below 1% and the ash below from 4 to 7%. Coals that do not require washing for the removal of impurities before coking give much better results if they are crushed and sized before coking. It has been found that a mixture of lump coal and fine coal fuses very unevenly, the fine coal fusing quickly and the lumps taking a longer time for the coking process to reach the middle.

Every variety of coal requires different apparatus for its treatment, and the proper apparatus can only be selected by making a careful study of the physical and chemical properties of the coal. Coal that requires washing should be carefully sized in order that the separation may be as complete as possible. The fact that the specific gravities of the minerals that are being separated are not far removed one from the other makes it essential that the sizing should be fairly close. The closer the sizing the more perfect the separation is likely to be.

Crushing the Coal.

§ 776. Bradford Coal Breaker. — For the disintegration of coals and removal of slate and pyrite the Bradford coal breaker shown in Fig. 308 has been found well adapted and economical. It is simply a drum or cylinder supported on trunnions in much the same manner as the ball mills. The cylinder is made up of screens *a* bolted to longitudinal braces *b* that are fastened to the rims of the spider *c*. These spiders connect the outer part of the breaker with the trunnions *d* at each end, on which the breaker revolves. Instead of screen plates bars set parallel to the shaft are sometimes used. At intervals on the inside of the cylinder are bolted projections or shelves *e*, running lengthwise of the breaker. The coal is fed into the upper end of the cylinder, and the rotation of the cylinder carries the coal up the sides on these projections until it falls off as the shelves reach a vertical position. The coal is thus broken by dropping on the coal in the lower part of the cylinder and the fine coal then passes through the screen. The hard lumps and pieces of slate are carried up and fall several times before they reach the opposite end of the screen, whence they fall upon a conveyor and pass to the waste dump. The breaker is revolved by the peripheral gear *f*.

These breakers are run at about 20 revolutions per minute. When operated at full capacity they will handle from 300 to 700 tons per day with the expen-

diture of about 7 horse-power. The capacity of course depends upon the size to which the coal is being reduced. The Lackawanna Coal and Coke Company have used these machines on coal carrying about 4% of sulphur, a great part of which was in the form of pyrite or sulphur balls as large as 2 or 3 inches in diameter. The machines reduced the sulphur to about 3% previous to washing. The Cambria Steel Company also use these breakers with great success. They are being introduced in the West and Southwest.

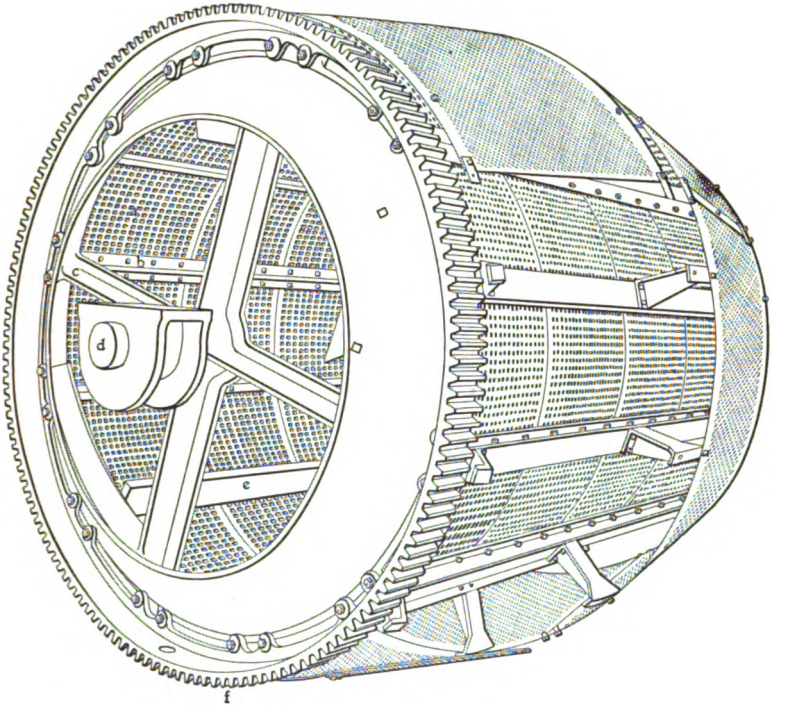

FIG. 308. — THE BRADFORD COAL BREAKER.

§ 777. CORRUGATED ROLLS AND ROLLS WITH INSERTED TEETH. — Toothed rolls are in use in most of the coal washeries. In fact about the only ones that do not use them are the few that wash only slack or nut coal; in other words, in plants where the coal is separated into several sizes and one or more of these sizes only, require washing. Corrugated rolls are used where the coal is crushed to a maximum size of $\frac{3}{4}$ inch or less. They crush finer than toothed rolls, but make more dust, and are especially adapted for crushing slate and coal that occur in flat pieces. If the corrugations are small and the rolls are set close, these rolls may be used for fine crushing.

The rolls (see Figs. 309 and 310) consist of a pair of iron or steel cylinders which are revolved by pulleys and gears at a speed of from 100 to 150 revolutions per minute. The surface of the rolls may be provided with corrugations or teeth. When the roll is provided with teeth, these teeth may be either cast on the roll face or inserted. Where the teeth are inserted they may be readily replaced when they become broken. The roll face is usually made up of segments that can be replaced when necessary.

§ 778. THE STEDMAN DISINTEGRATOR. — The Stedman disintegrator is

used to pulverize coal to a uniform fineness of cracked wheat or corn meal. It is a very good mixing apparatus and is designed to treat the purer coals that do not require washing and to further comminute coal that has been washed before charging the same to the coke ovens.

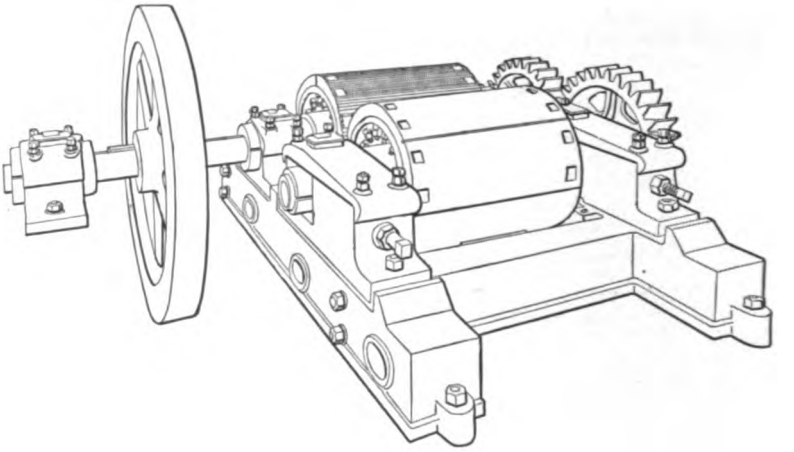

FIG. 309. — CORRUGATED ROLLS.

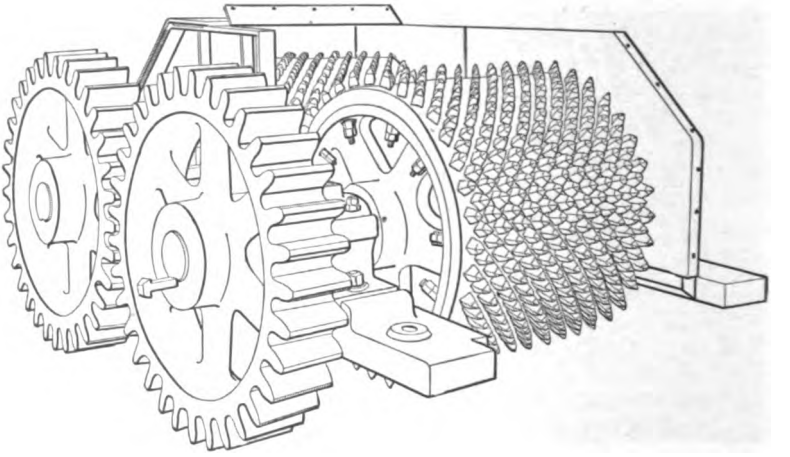

FIG. 310. — TOOTHED ROLLS.

Fig. 311*a* shows the machine in section, which consists of two discs: one carrying two cages of forward, the other two cages of backward, revolving bars. Each cage is reinforced by a ring at the opposite end of the bars. Each disc is mounted on a flange with a shaft, two bearings, a pulley, and a fly-wheel. Fig. 311*b* shows the pillow blocks slipped from their places to allow the discs to be spread apart for repairs; it also shows the removable housing which has a feed hopper at the side and a delivery spout below.

Crushing takes place by impact. The fragments of coal fed at the center, are struck by the bars of the inner cage, being partly broken, and receive tangential velocity in one direction as they pass outward. The bars of the second

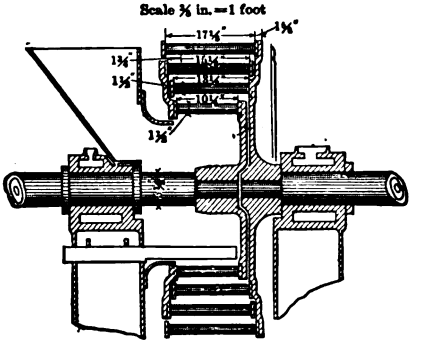

FIG. 311*a*. — SECTION OF STEDMAN DISINTEGRATOR.

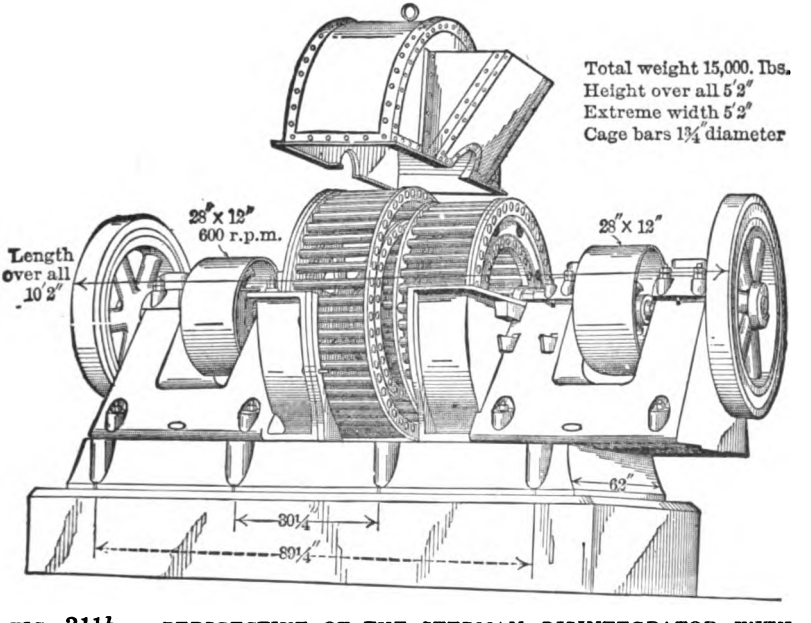

FIG. 311*b*. — PERSPECTIVE OF THE STEDMAN DISINTEGRATOR WITH HOUSING RAISED AND CAGES PULLED APART.

cage, revolving rapidly in the opposite direction, meet the particles and strike them blows of double energy. The third and fourth cages of bars repeat this work, reducing the size of particles at each cage.

A bar projecting into the inner cage breaks lumps and prevents banks. Two revolving scrapers attached to the outer cage prevent accumulation in the housing. When crushing coal the machine should be run dry; not over 4 to 6% of moisture is allowed. The fineness can be regulated by the speed and the capacity decreases with the fineness and the wear of the bars. The capacity of the machine will average 0.4 ton per horse-power hour.

§ 779. HINGED-HAMMER PULVERIZERS. — These have been described in Chapter VI., and the description need not be repeated here. They are used to a considerable extent in the Eastern part of the United States and are better

adapted for the crushing of dry coal than for the crushing of wet coal. When wet coal is being crushed the screens clog quickly and the capacity is thereby much reduced.

SIZING THE COAL.

§ 780. SIZE OF COAL FOR WASHING. — When coal is being washed for coking purposes, the screens are usually of such a mesh that nothing larger than 1 inch in diameter can go to the washing machines. Where the impurities in the ore are finely distributed, the largest pieces that are allowed to go to the washers are through $\frac{5}{8}$-inch hole. Sizing is not often carried below $\frac{3}{8}$-inch hole, and very frequently only one size of screen is used, $\frac{5}{8}$ or $\frac{3}{4}$ inch. This screen divides the whole material into two sizes, each of which is then treated on separate washing machines. Coal which contains much bone requires closer sizing than when slate is the material next heavier than the coal. To size the coal before it goes to the washer, trommels, either cylindrical or conical, and occasionally hydraulic classifiers, are used. These devices differ in no important particular from the corresponding devices used in ore dressing and therefore will not be taken up in detail.

WASHING THE COAL.

There are four chief varieties of devices used for the washing of coal: (1) Trough washers, of which the Scaife washer is an example. (2) Continuous ascending current washers, of which the Jeffrey-Robinson washer is an example. (3) Intermittent ascending current washers or jigs. (4) Bumping tables, of which the Campbell washing table is an example.

Trough Washers.

§ 781. The most primitive of these devices consisted of a long wooden trough, divided by low cross-sectional dams at intervals along its course. The inclination of this sluice was made sufficient to give enough force to the water passing through it to separate the coal from the slate, the slate remaining in the upper recesses of the dams, while the coal was carried over, screened, and delivered into a car or other receptacle at the other end of the sluice. The slate was removed at stated intervals by an attendant with a rake.

Trough washers of this type are inexpensive as far as their first cost is concerned, but the cost of operation is high unless automatic appliances are used for operating. In order to make the removal of the refuse, that collects in the washer, more nearly automatic, improved forms of the trough washer have been introduced. Of these the Scaife trough washer is perhaps the best example.

§ 782. SCAIFE TROUGH WASHER. — This washer (see Figs. 312*a* and *b*) consists of an inclined trough *a* of semicircular cross-section, 2 feet in diameter and 24 feet long, provided at intervals with riffles. Extending lengthwise of the trough is the shaft *b* with stirrers *c*. Shaft *b* is given a rocking motion by means of a crank attached to the flanged driving pulley *d*. The empty trough, which is hinged to the frame on one side, is partly held in position by the adjustable counterbalance weights *e* on the arms *f*, attached to the trough. A tongue *j* on the operating lever *g* passes through an eye on the side of the trough and holds the lever in place.

The coal and water are fed into the upper end of the trough, where the combined action of the flowing water and the stirrers causes the slate and other impurities in the coal to settle to the bottom, where they are caught by the riffles. The clean coal passes over the top of the riffles and out at the lower end. When the spaces between the riffles become filled with refuse, feeding is stopped or the feed turned into an adjacent washer and all the remaining

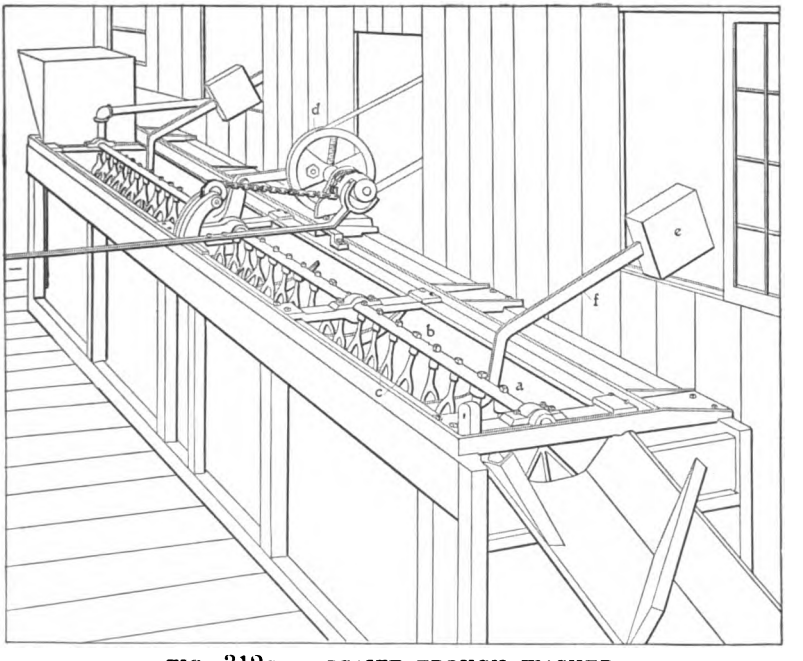

FIG. 312*a*. — SCAIFE TROUGH WASHER.

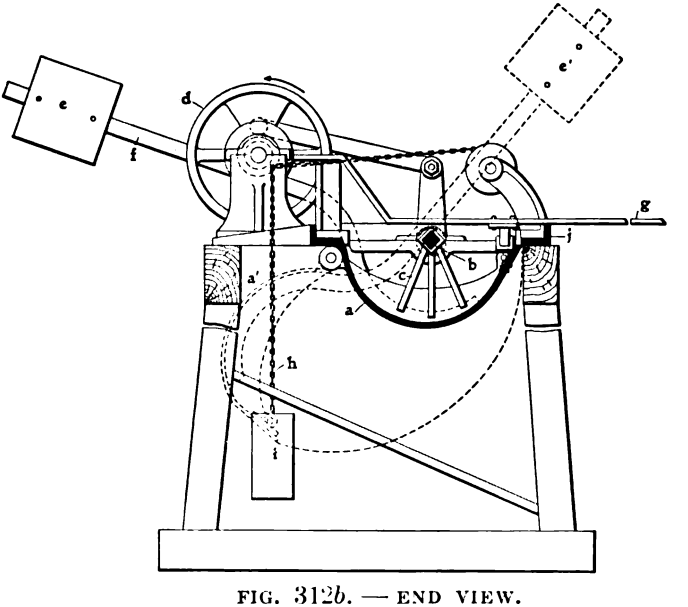

FIG. 312*b*. — END VIEW.

coal is washed over the riffles. The lever *g* is moved a few inches to the right, drawing the steel tongue out of the eye and releasing the trough. The trough now drops into the dotted position *a'* dumping the refuse, the counter-weight now being in the position *e'*.

The trough is brought back into its original position by moving the operating lever still farther to the right, which engages a clutch, and allows the chain *h* to be wound up, lifting the trough. The weight *i* keeps the chain taut. As soon as the trough is raised, the lever should be drawn quickly to the left until it reaches its original position. This movement releases the clutch and locks the tongue in the supporting eye of the trough; the washing is then recommenced.

This washer requires less attendance than the earlier forms. It has few wearing parts and those easily replaced. The water may be used over again and again. The slope that is given the trough depends on the size of the material that is being washed and the nature of the impurities that are being removed. The larger the size of the material being treated the greater should be the slope and the amount of water used.

Continuous Ascending-Current Washers.

Washers of this type have a continuous rising current of water which is strong enough to float the coal while the heavier impurities settle against it. In order to operate successfully the coal should be sized by screens before being sent to washers of this sort. The Jeffrey-Robinson washer is of this type and will be described.

§ 783. JEFFREY-ROBINSON INVERTED COAL WASHER. — This washer (see Fig. 313) consists of an inverted steel cone *a* inside of which are projecting

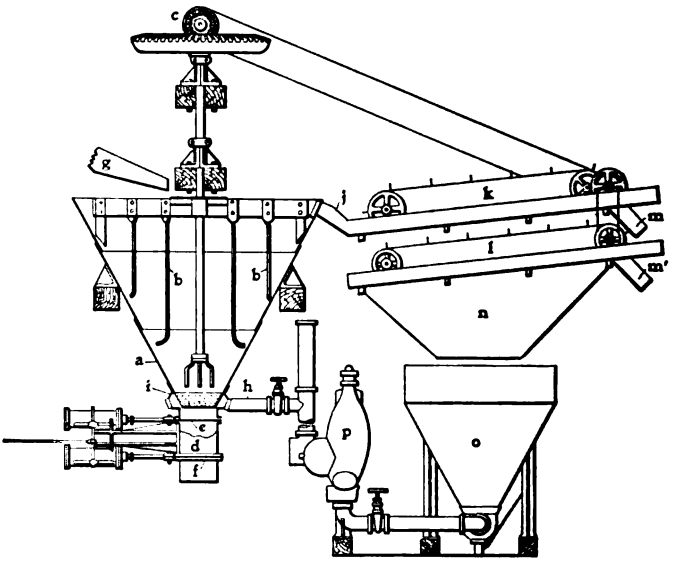

FIG. 313. — JEFFREY-ROBINSON WASHER.

arms and stirring plates *b* driven by gear *c*. The bottom of the cone opens into a chamber *d* with valves *e* and *f*. The coal to be washed comes into the washer through the chute *g*, while the rising water current enters the bottom through the water pipe *h* and perforations *i* in the bottom of the tank. The material in the cone is kept in a continual state of agitation and the rising water current carries the particles of coal out of the tank through the spout *j*, while the heavier particles, slate, pyrite, etc., sink into the collecting chamber *d*, the upper valve *e* being open and the valve *f* being closed. When the collecting

chamber becomes full the valve *e* is closed and the valve *f* is opened, thus allowing the refuse to be discharged. The lower valve is then closed and the upper one opened and the operation repeated.

The coal passes out through the overflow spout *j* to the conveyors *k*, *l*, and then through the chutes *m*, *m'*, while the water and sludge drain through the conveyors into the hopper *n*, and then pass into the sludge tank *o*, whence, if necessary, the same water can be pumped by the pulsometer *p* back into the washer. The upper conveyor *k* carries off the larger pieces and permits the smaller pieces to fall on the conveyor *l*, in which the holes are smaller and which, therefore, separates the smaller pieces from the sludge.

If the water contains fine particles of pyrite it should not be used again where it is desired to reduce the sulphur in the washed coal as much as possible.

The general arrangement of a Jeffrey-Robinson coal-washing plant is shown in Fig. 314. (See page 632.) The coal in the cars (1) is dumped into the bin (2), from whence it is fed into the crusher (3). The crushed coal is received in the boot of the elevator (4) by which it is elevated and fed to the washer (5). The washed coal passes over the draining screens (6) and (7) into the boot of the elevator (8) and thence into the elevated washed-coal bin (9). The washed coal is drawn from the bin (9) into the larries (10) and sent to the coking plant.

Intermittent Ascending-Current Washers, or Jigs.

§ 784. In Chapter XI. several of the leading types of jigs have been described and the principles involved have been discussed in full. The jigs that are used in coal-washing operations may be divided into the same two classes as those used in dressing ores; *fixed sieve jigs* and *movable sieve jigs*. The jigs that are most extensively used in washing bituminous coal in this country are the Luhrig, New Century, Stewart, and Pittsburg jigs. The first two are fixed sieve jigs and the latter two are movable sieve or pan jigs.

§ 785. FIXED SIEVE JIGS. THE LUHRIG JIG. — The Luhrig jig is very extensively used both in this country and abroad. As an essential part of the Luhrig process of washing, the coal is sized by screens. Two kinds of Luhrig jigs are made, one adapted for the treatment of nut coal and the other for the finer sizes. Fig. 315 shows the Luhrig nut coal jig. As will be seen in the cut, the jig consists of a rectangular box with hopper bottom, divided about half way down from the top by a partition. In one of the compartments thus made, a relatively close fitting rectangular piston actuated by an eccentric works up and down. The other compartment is closed at the bottom of the partition by a slightly inclined screen plate. The entire jig is filled with water and the movement of the piston gives a pulsating motion to this water, forcing it up and down through the screen plate. The coal to be washed is received on this screen plate near the partition and the action of the water agitates the mass, separating the coal, which flows off the top of the jig, from the refuse, which settles on the screen. By means of a valve at the forward end of the jig box, set at the desired opening, the excess refuse beyond what is needed for the bed is allowed to flow off, thus preventing the

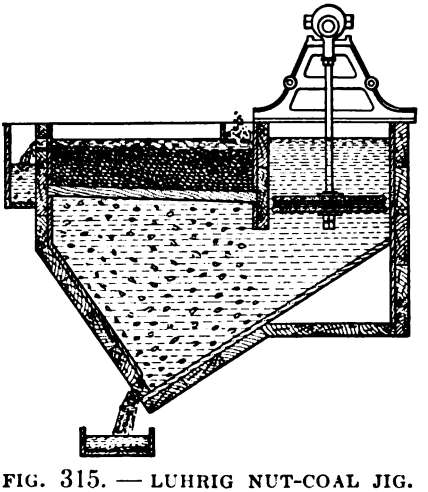

FIG. 315. — LUHRIG NUT-COAL JIG.

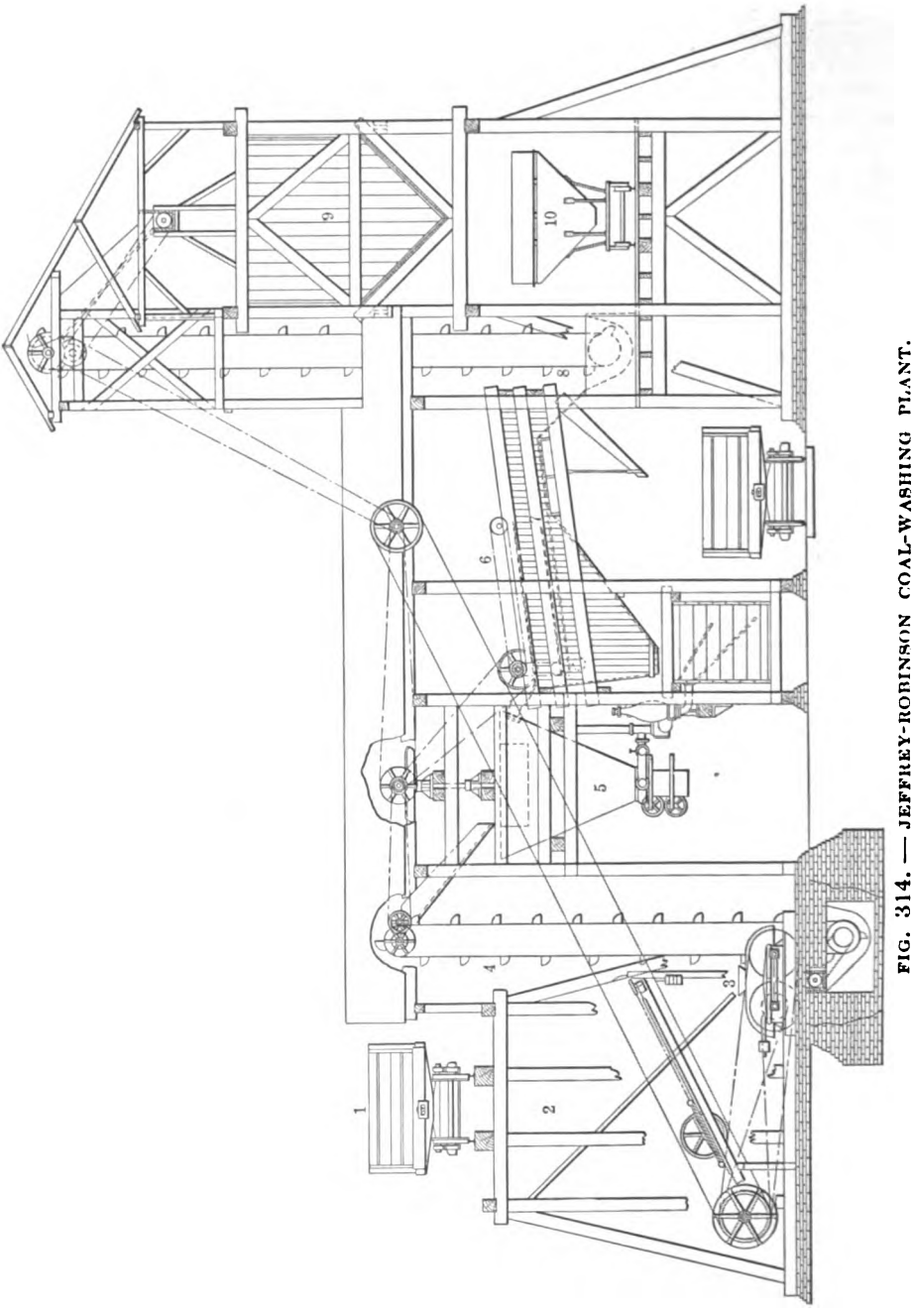

FIG. 314. — JEFFREY-ROBINSON COAL-WASHING PLANT.

accumulation of so heavy a bed of refuse on the screen as to interfere with the proper movement of the water through it. The refuse, as it passes through the valve, falls into a compartment, in the bottom of which is a slowly moving screw conveyor for the removal of the refuse. The bed of refuse lying on the screen prevents the finer particles of coal from being drawn through it by the suction of the piston, such fine material as does go through the screen being simply refuse and collecting in the hoppered bottom of the jig box, from which it may be drawn off at intervals. The screw conveyor for moving the refuse may be made to serve an entire row of jigs side by side, delivering finally to a refuse elevator at the side of the battery.

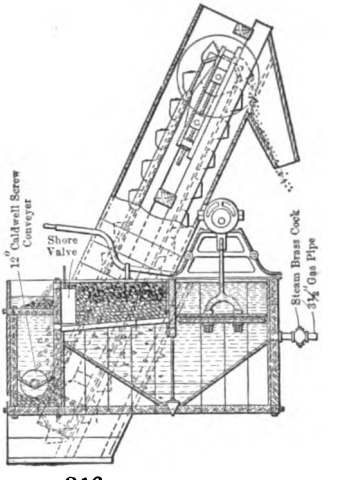

FIG. 316. — LUHRIG FELDSPAR JIG.

The general operation of the fine jigs (see Fig. 316) is similar to that of the nut-coal jigs except that, as the fine bed of refuse on the screen would offer too much resistance to the action of the water, an artificial layer of feldspar is carried on the screen. The coal works its way across the top of this feldspar bed and flows over the end of the jig, while the heavier refuse gradually works down through the feldspar bed and screen into the hoppered bottom of the jig box, whence it passes out through a refuse sluice by gravity.

§ 786. THE NEW CENTURY JIG. — The new Century jig as used for ores has been described in Chapter XI. Fig. 317 shows the form of jig used in coal

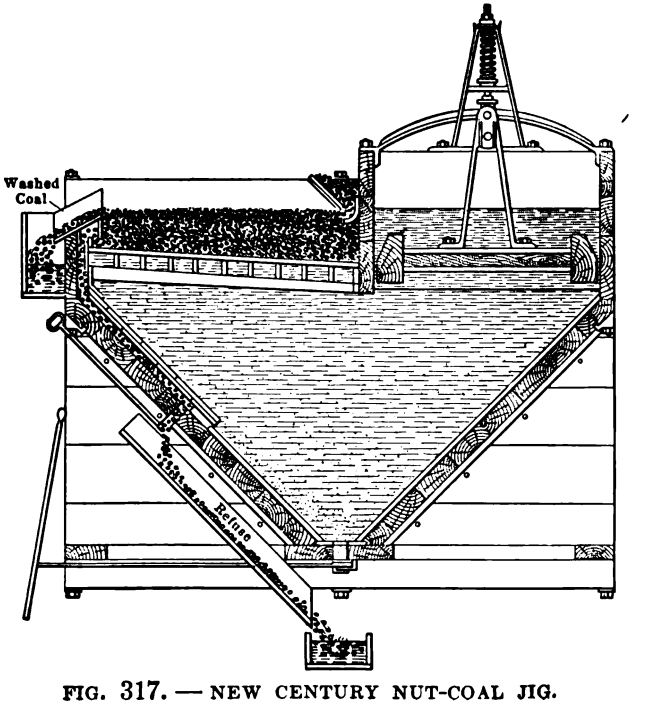

FIG. 317. — NEW CENTURY NUT-COAL JIG.

washing. As in the Luhrig jig, the refuse makes its own bed on the jig screen and is removed automatically by a refuse valve so adjusted as to always maintain a refuse bed of the desired thickness. While this valve is automatic in its action, it is at the same time entirely under the control of the operator.

§ 787. MOVABLE SIEVE JIGS. THE STEWART JIG. — The characteristic feature of this type of jig is the basket or box with perforated bottom into which the material to be washed is fed and over which the current of water carries it. (See Fig. 318.) The entire box (1) is suspended in a tank of water

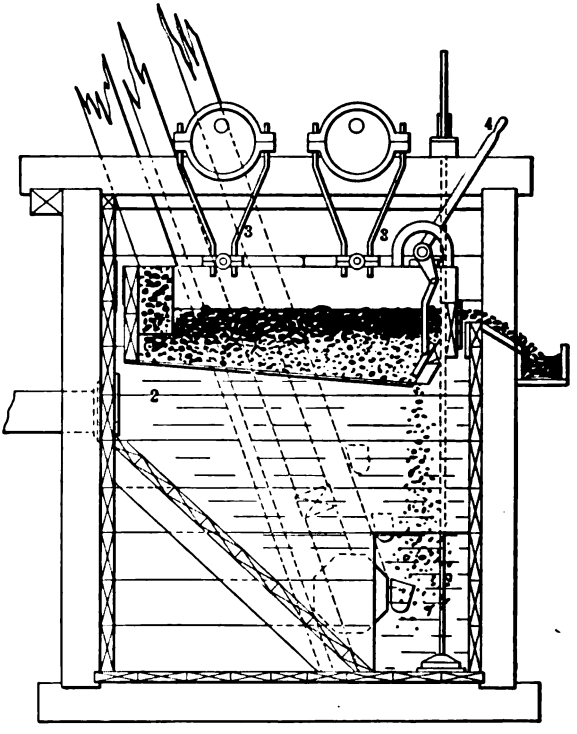

FIG. 318. — STEWART-TYPE JIG.

(2) from eccentric suspension rods (3), which impart to it an upward and downward movement. This forces the water alternately back and forth through the perforated bottom, lifting the coal and allowing it to be carried away by the stream of water flowing from the top, while the heavier material or refuse settles on the screen plate, from which it works forward and off into the water tank through a valve set at suitable height. The tank (2) has a hoppered bottom, which directs the falling refuse into an elevator by which it is removed. This type of jig is suited for washing only the coarser sizes of coal. The lever (4) serves to regulate the height of the valve through which the refuse is discharged. Fig. 319 shows these jigs in operation.

§ 788. THE PITTSBURG JIG. — This jig is a modified form of the Stewart jig. The essential feature of this jig (see Fig. 320) consists in the means for reducing suction. The jig pan is continued below the sieve and provided with flap valves which open on the down stroke permitting the water to rise through the sieve and then close on the up stroke, preventing the water from flowing back through the perforated plate. As the jig pan moves slowly

upward the water in the jig pan flows off into a drag conveyor, shown in the cut, carrying the coal with it; the slate being heavier falls to the bottom at each stroke, finally reaching the screen where it is drawn off through the adjustable slate valve.

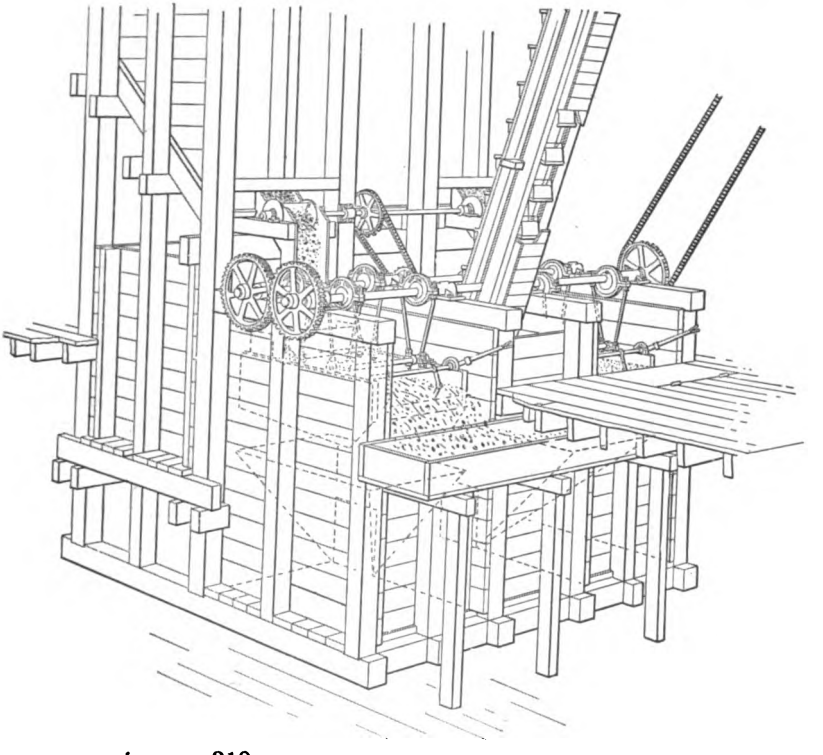

FIG. 319. — STEWART JIGS IN OPERATION.

This jig, instead of having a simple eccentric motion as does the Stewart jig, is provided with a crank-arm mechanism which gives a quick down stroke and a slow up stroke. These jigs are in use at the Cokedale plant of the American Smelting and Refining Company, and are said to be highly satisfactory in their operation.

Bumping Tables.

§ 789. Bumping tables are not in very common use for the washing of coal. The Campbell table has, however, attained some prominence and is said to be quite satisfactiory. Its operation depends on both gravity and momentum. The table (see Fig. 321*a*) consists of a hollow rectangular box *a* about 9 feet long and 30 inches wide, suspended from above by four rods *b* attached near the corners so as to permit a longitudinal swinging motion of 6 to 8 inches. The sides *c* of the box are of oak boards 1 inch thick, 12 inches wide at one end and 9 inches wide at the other. Midway between the sides and underneath is the strip or keel *d* of 2-inch oak. The sides and keel are firmly joined to a solid head or bumper *e*, shod with steel plate. The bottom of the washer is in two parts and has a peculiar curve determined by trial. The lower or true bottom *f* is formed by a steel plate securely fastened to the side boards and keel. Above the true bottom is the false bottom *g* with a 1½-inch space between it and the

bottom *f*. This false bottom consists, in the older forms of this washer, of wooden strips, but in a later form, of galvanized-steel plates bent so as to form riffles, as shown at *g*. (See Fig. 321*b*.) The plates are set $\frac{1}{16}$ to $\frac{3}{32}$ inch apart. The reciprocating movement of the table is caused by a cam *h* of a peculiar oval form, which, in combination with the corker arm *i* on the rocker *j*, gives a slow forward motion with a quick return, the velocity gradually increasing

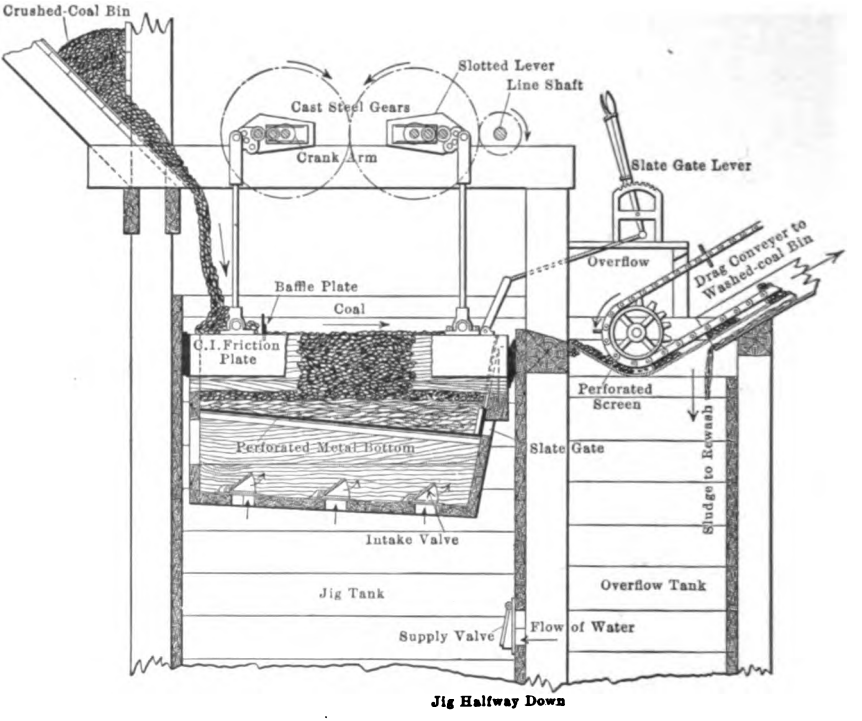

FIG. 320. — THE PITTSBURG JIG.

up to the moment of impact with the bumper. This action may be explained as follows: The lever *i*, which is suspended by links *k*, has considerable play between the rocker *j* and the adjustable fulcrum block *l*. On the forward stroke, the cam *h* pulls on the lever *i*, which, turning against the fixed fulcrum *l*, gives an even movement to the table. The egg shape of the cam gives a smooth change of motion at the extreme point outwards. On the backward or return stroke the lever *i* turns on the rocker *j*, which is slightly curved and thus forms a movable fulcrum for the lever *i*. When this point of contact is at the upper end of the rocker *j*, the leverage is small and the movement of the table is slow. As the stroke proceeds, the fulcrum point of the lever is lowered, and the movement of the table increases until it reaches its maximum at the moment of impact against the bumping post *m*. At this point the eccentric changes the direction of its motion, while the india-rubber washers or a spring at the end *n* of the connecting rod *o* provide against any undue strain to the lever *i* from imperfect adjustment.

When in operation, the coal to be washed is fed on the middle of the table from the hopper *p* through the sluice *q*. Water enters this sluice from the pipes *r*, *r'*. The coal and wash water are distributed evenly over the washer by the

sluice valve *s*. More wash water is added on the table from the pipe *t*. The current of water flowing over the table washes the lighter coal toward the discharge end *u*, where it is discharged into the sluice *v*; the heavier slate and pyrites settle to the bottom of the table and are caught by the riffles *g*. The motion of the table not only keeps the material stirred up so as to bring about a better separation of coal and slate, but the momentum acquired during the quick return causes the heavier slate and pyrites, when the table is suddenly stopped by the bumper, to move toward the head end *w* where they are discharged into the refuse chute *x*. Very fine particles of heavy refuse are jarred or washed through the spaces in the false bottom *g* into the space between it and the true bottom. This fine material is jarred to the head end and discharged with the other material. For the proper working of the washer, it is necessary to provide for careful adjustment of the inclination of the table, which is done by means of a lever *y* and chain *z*, and also for careful regulation of the water

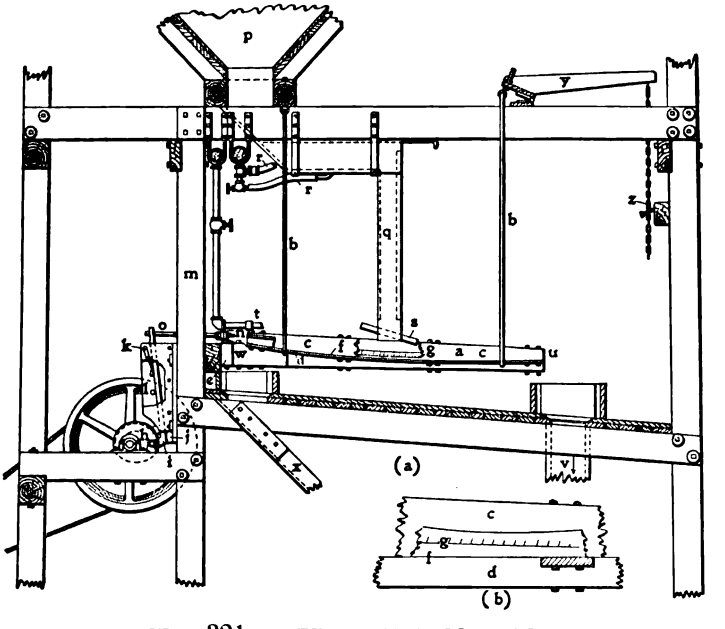

FIG. 321. — THE CAMPBELL TABLE.

used. This washer has a capacity of from 5 to 7 tons of washed coal per hour, with an expenditure of about ½ horse-power. The sizing of the coal is not important, but the washer works best on sizes under ¼ inch. One ton of coal requires about one ton of water to wash it. One man can care for about fifteen machines.

DRYING WASHED COAL.

§ 790. It is often necessary to dry the washed coal before charging it to the coke ovens. There are three methods that are used to accomplish this: Dewatering screens, perforated or draining buckets, and filter bins. The first and the last of these schemes have been discussed in the chapter on accessory apparatus. With reference to the second scheme mentioned above it may be said that perforated buckets are used on the elevators carrying the coal from the washery to the bin, the water being allowed to drain off while the ore is

being transported. Where filter bins are used they are excavated by grab buckets or traveling elevators after having been allowed to drain for a sufficient length of time.

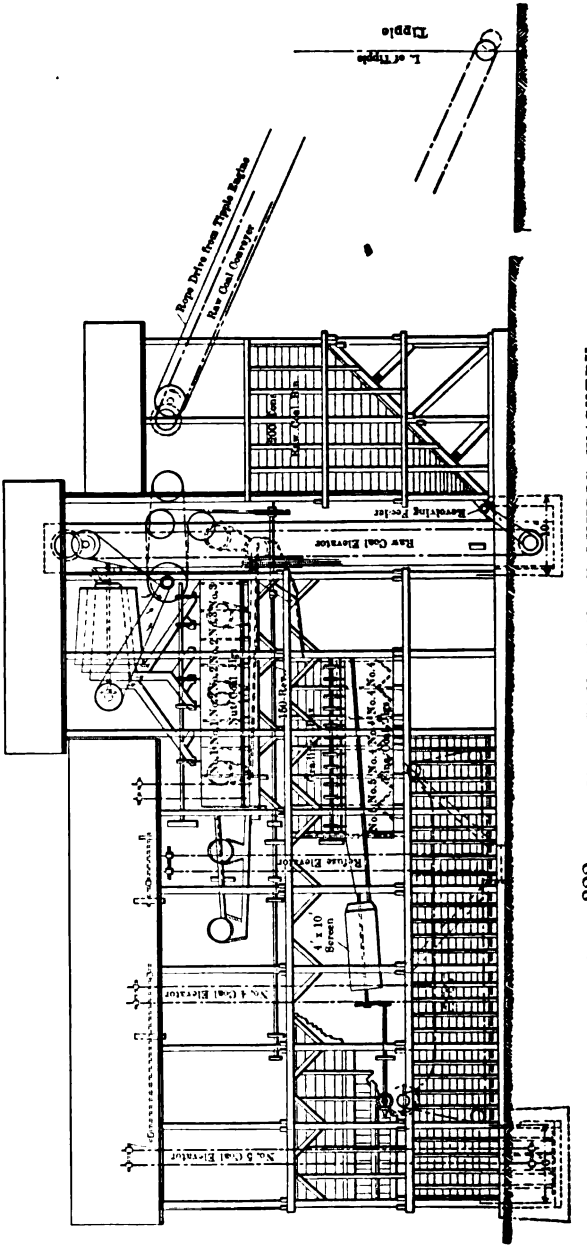

FIG. 322a. — SIDE ELEVATION OF LUHRIG WASHERY.

ARRANGEMENT OF BITUMINOUS COAL WASHERIES.

After having taken up the principal machines that find use in the washing of bituminous coals a few typical washeries may be considered.

§ 791. LUHRIG WASHERY. — The washery of the Big Muddy Coal and Iron Company at Herrin, Illinois, is a typical Luhrig washery. This washery is shown in side and end elevations in Figs 322*a* and *b*. The coal coming from the tipple is delivered by the raw coal conveyor into the raw coal bin at the right, as shown in the elevation. From the raw-coal bin the coal is delivered by automatic revolving feeders to the elevator which supplies the coal to a set of concentric revolving conical trommels. These trommels divide the coal into Nos. 1 and 2 nut coal and Nos. 3, 4, and 5 fine coal. The two sizes of nut coal are sluiced directly to the nut-coal jigs and the fine coal goes to the fine-coal jigs.

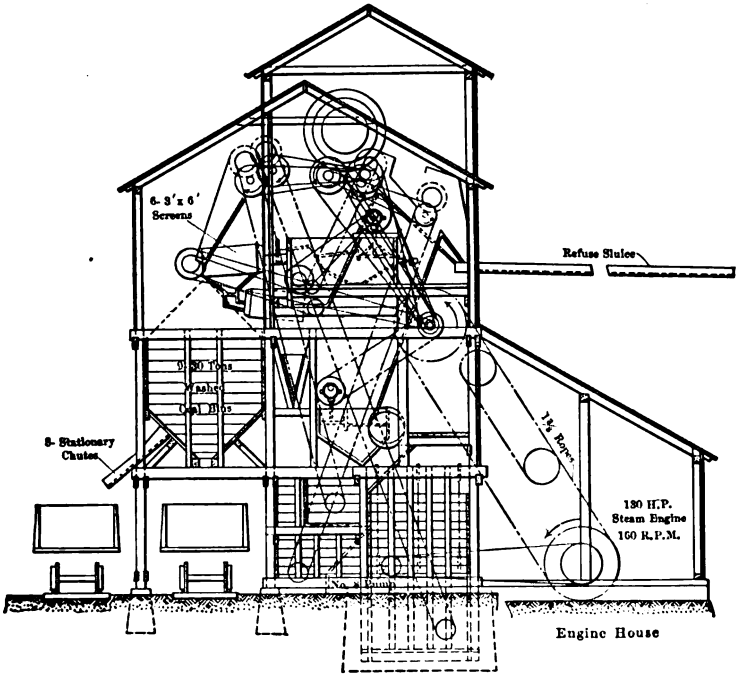

FIG. 322*b*. — END ELEVATION.

The washed coal from the nut-coal jigs is sluiced into draining screens as may be seen at the left of the nut-coal jigs in the elevation. From these draining screens it is deposited by gravity or elevated by draining elevators into the shipping pockets. The water passing through the draining screens and containing some fine coal flows to a sludge tank in the bottom of the washery. The refuse from the nut-coal jig is taken by screw conveyor to the refuse elevator and out of the washery through the refuse sluice The clean coal from the fine-coal jigs is treated similarly to the clean nut coal, the water passing through the drainage screens flowing to the sludge recovery and the refuse to the refuse elevator. The sludge recovery is merely a large settling tank in the bottom of which is a conveyor moving very slowly. The fine coal carried in suspension in the water gradually settles to the bottom, and is taken by the conveyor to a draining elevator at the end of the tank, which raises this fine coal and deposits it in the shipping bins. The water, thus left reasonably pure, is pumped from this tank and used over again in the washing process. In some plants the refuse is sent to a bin and is re-crushed and re-washed, the clean

coal passing to the sludge recovery tank and the refuse to a refuse tank. The water that is recovered from the refuse tank passes to the sludge recovery tank and is used over.

§ 792. STEIN AND BOERICKE WASHERY. — Figs. 323*a*, *b*, and *c* show a Stein and Boericke washery designed for the Jefferson Coal and Railway Company at Lewisburg, Alabama. The coal arrives from the mine at the tipple (1) and

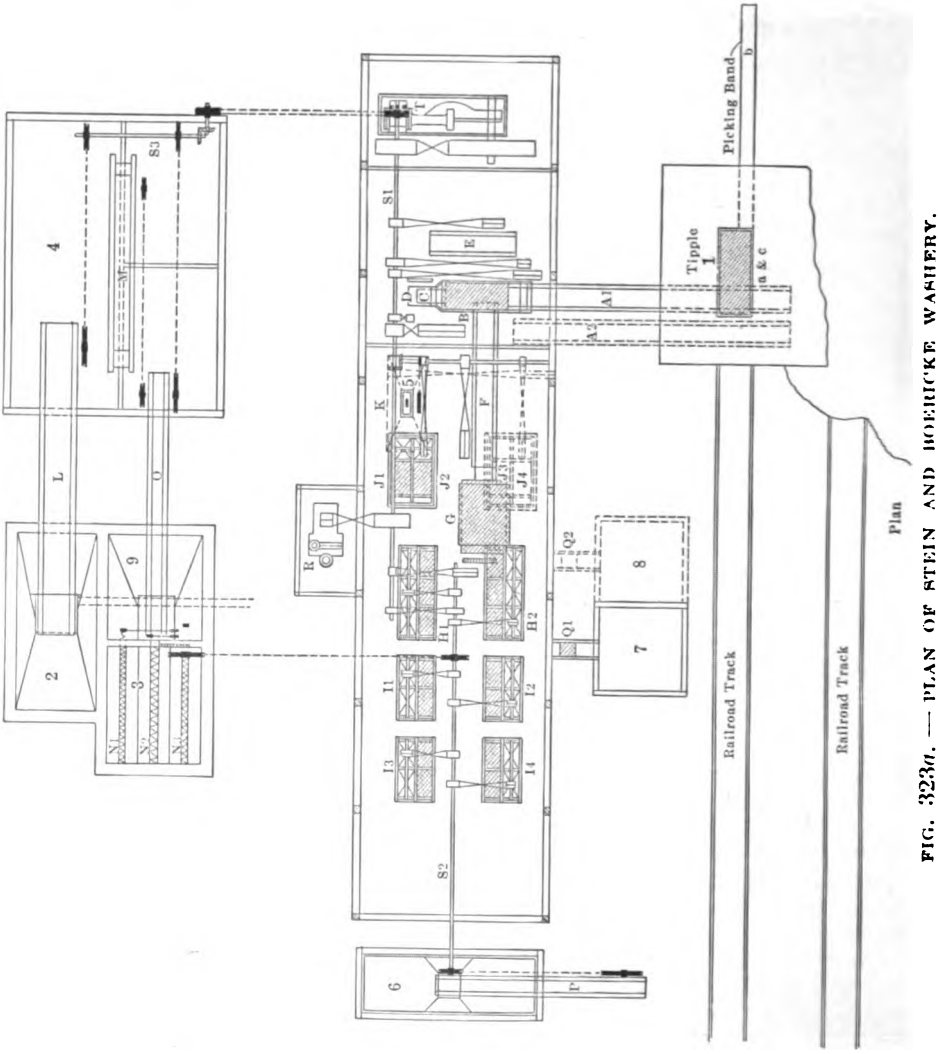

FIG. 323*a*. — PLAN OF STEIN AND BOERICKE WASHERY.

is dumped on screen *a* of 2 mesh. The material passing over this screen falls on the picking belt *b*, where it is hand-picked. This picking belt conveys the coal to railroad cars, ready for shipment as lump coal.

The material passing through the screen *a* falls on a second screen *c* having 1-inch openings. The material passing over this screen is taken by the elevator A_2 to the nut-coal washing machines J_3 and J_4. From these the washed

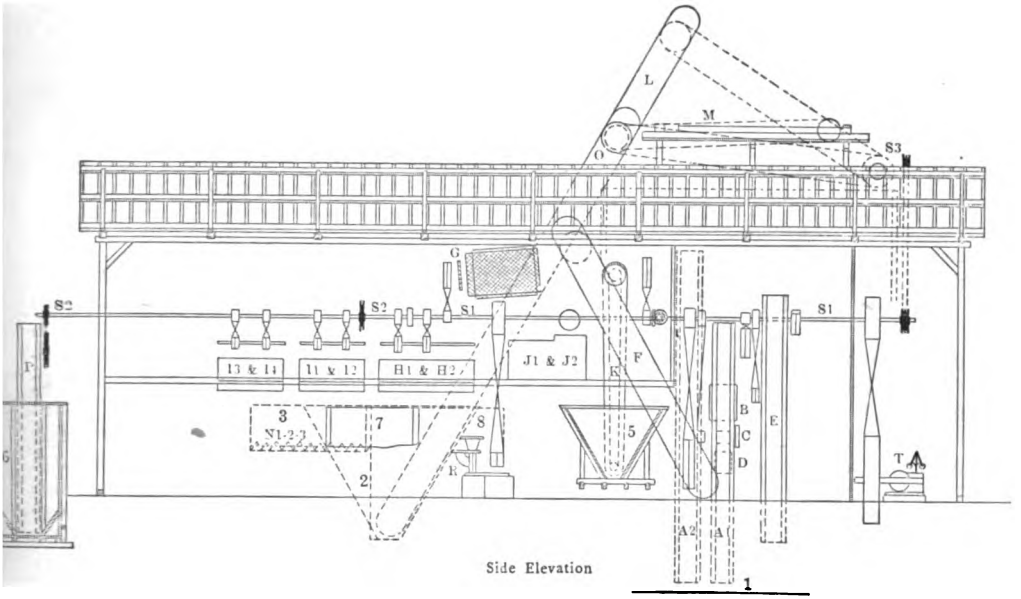

FIG. 323*b*. — SIDE ELEVATION.

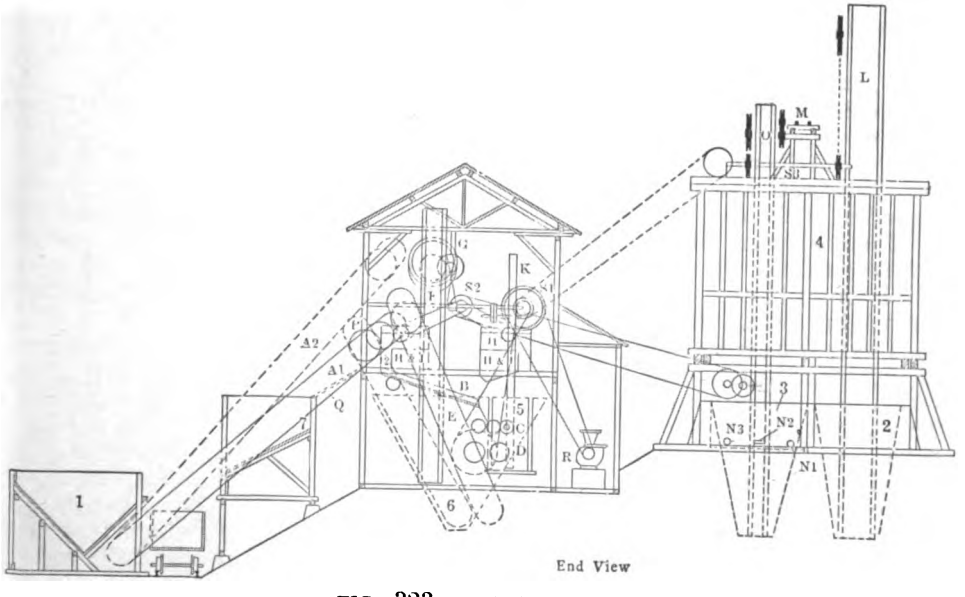

FIG. 323*c*. — END VIEW.

coal is conveyed by launders to the draining screen Q_2 and discharged into the storage bin (8). The waste material from J_3 and J_4 passes to the re-washing tank (5). The material passing through screen c is taken by the elevator A_1 to the single shaking screen B which has $\frac{9}{16}$-inch openings. The coal passing over this screen drops through the small rolls C into the crusher D and is then again raised by the elevator E to screen B.

The material passing through the screen B is raised by the elevator F to the perforated screen drum G which separates the coal into three sizes: 0 to $\frac{3}{16}$ inch, $\frac{3}{16}$ to $\frac{3}{8}$ inch, and $\frac{3}{8}$ to $\frac{9}{16}$ inch. These are conveyed in launders to the jigs I_1, I_2, I_3, and I_4; the two-compartment jigs I_2 and I_4 washing the material from 0 to $\frac{3}{16}$ inch, the two-compartment jigs I_2 and I_3, the material $\frac{3}{16}$ to $\frac{3}{8}$ inch, and the three-compartment jigs H_1 and H_2 washing the sizes $\frac{3}{8}$ to $\frac{9}{16}$ inch.

The washed coal from all of these jigs is conveyed by launders to the masonry tank (2), from whence it is raised by the perforated bucket elevator L and delivered to the conveyor M which distributes it to the different compartments of the storage tower (4). Part of the washed coal passes to the draining screen Q_1 and is discharged into bin (7) to be used as blacksmith coal. The waste material from the jigs goes by way of launders to the re-washing tank (5) and is raised by the elevator K to the re-washing jigs J_1 and J_2. The washed coal from these jigs goes to the masonry sludge tank (9) and together with the sludge from the settling tank (3) is raised by the perforated bucket elevator O to a separate compartment of bin (4), to be used for making second-grade coke for house use.

The final waste from the re-washing jigs J_1 and J_2 passes by a launder to the slate boot (6) and is dumped by perforated bucket elevator P into railroad cars.

The water is raised to the jigs by means of the centrifugal pump R from the washed-coal tank (2). It passes through the settling tank (3) and back to the pump, to be used over and over again. There is no loss of the water except that absorbed by the coal. The sludge, settling in the settling tank (3), is carried by the screw conveyors N_1, N_2, and N_3 to the sludge boot (9). S_1, S_2, and S_3 represent the shafting and T the steam engine.

§ 793. ROBINSON WASHERY. — While in the Southern coal section there are to be found representatives of all the different types of washeries, it is safe to say that there are more of the constant ascending current washers in successful operation there than of any other type. The washery about to be described is the 400-ton washery at the No. 2 Slope, Pratt Mines, Alabama.

The coal is mined from the Pratt seam which has an average thickness of 3 feet 6 inches. It has distinct cleavage planes and breaks in cuboidal lumps. The lump and nut coals are used for domestic and steam purposes and the slack for making coke. The specific gravity is 1.272.

The coal from the mines is dumped on an ordinary bar screen, with spaces $2\frac{1}{2}$ inches in the clear; all going over this screen being shipped as lump. That which passes through is received on a shaking bar screen, with $\frac{3}{4}$-inch spaces. This screen serves to separate the nut from the slack. The slack which is the portion passing through this screen is all sent to the washer. Out of an output of from 700 to 800 tons per day, about 40% is shipped as lump and nut and the remainder being washed and then coked. The impurities occurring in the coal are pyrites, mineral charcoal, and slate partings. As delivered at the tip there is also foreign slate and dirt from the top and bottom of the seam. The pyrite occurs in thin sheets or local partings and not in nodular form. The pieces of slate as well as the pyrites in the slack coal are then having a length and breadth several times as great as their thickness. The specific gravity of the slate is from 1.8 to 2.

These remarks have been made with the idea in mind of showing the student what the problem is. The washery will next be described.

§ 794. *Washing Plant.* — This consists of a 400-ton Robinson washer with the necessary apparatus for handling the coal before and after washing. The coal which has passed the nut screen (¾ inch to 0), descends by gravity to a 16-inch screw conveyor. This conveyor (see *A*, Fig. 324*c*) has a pitch of 18 inches. It is horizontal, 19 feet 6 inches long, and has, at a speed of 25 revolutions per minute, an actual capacity of 75 tons per hour. This screw delivers to a flight conveyor *B* with a slope of 32°, the flights being 7½ by 13 inches and set 21 inches apart. As is shown in the illustrations, the lower end of this conveyor is below the railroad level, so that it may take coal from the screw conveyor *C* shown in Fig. 324*a*, which is used at night, when coal from other mines is brought in by rail. The coal is delivered by this conveyor over the central part of the washer tub *D*. This washer is of the Jeffrey-Robinson type and has been described and its mode of operation explained in a previous paragraph.

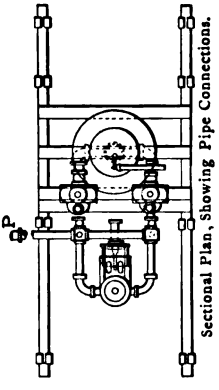

FIG. 324*d*. — PIPE CONNECTIONS.

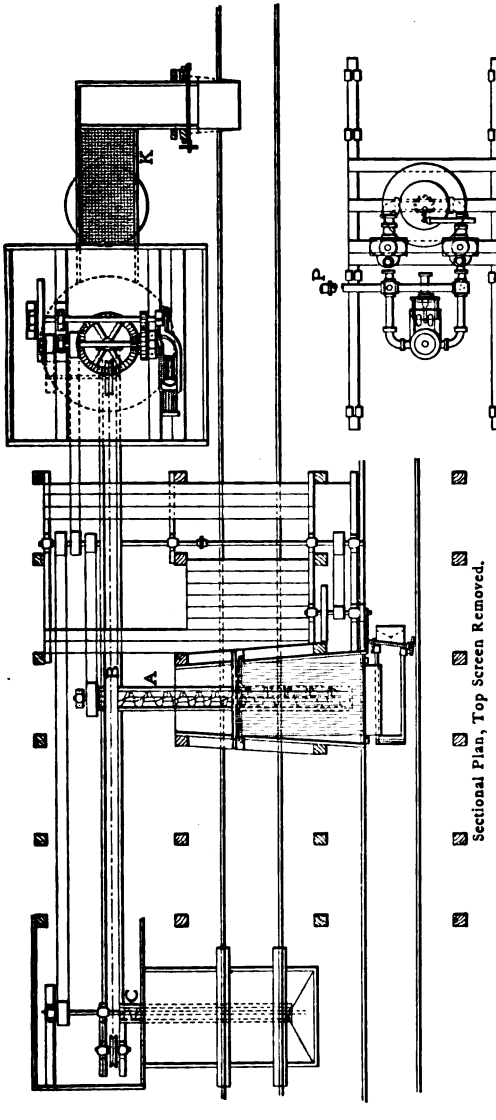

FIG. 324*c*. — SECTIONAL PLAN.

The slack dropped by the conveyor into the washer starts to descend, but is met by the ascending currents of water, and the particles of coal are stopped in their downward career and carried up and over the discharge *E* (see Fig. 324*b*), while the heavier impurities continue to the bottom. This separation is assisted by the continuous agitation caused by the stirrers, which make eight revolutions per minute, and are so arranged that the two sets travel different paths. The refuse collects in the chamber *F* (see Fig. 324*a*), closed at the bottom by the valve *H*. When the attendant becomes satisfied that this chamber is full of slate the valve *J* is closed and the lower valve *H* is opened, discharging the waste into a car without at all interfering with the process of washing. In practice the waste is allowed to accumulate in the cone, and emptied three or four times an hour by

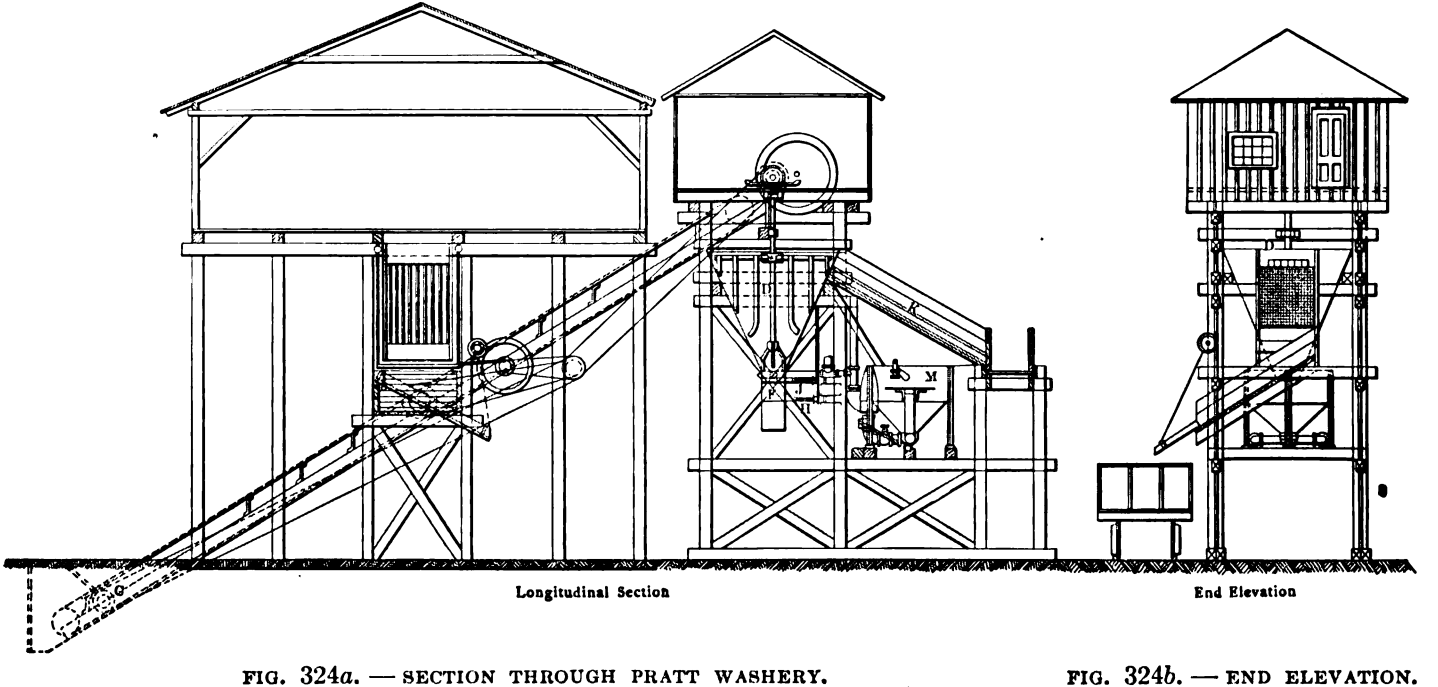

FIG. 324*a*. — SECTION THROUGH PRATT WASHERY.

FIG. 324*b*. — END ELEVATION.

working the valves until it is certain that about all the waste has been taken out. When the plant was first started up the valve levers were worked by hand, but this method has since been replaced by a series of steam pistons so that the valves may now be worked by one man without exertion.

The cleaned coal and water passing the overflow *E* (see Fig. 324*b*) are received on the screen *K*. (See Figs. 324*a* and *c*.) At first one screen was used with $\frac{1}{8}$-inch perforations. This did not drain the coal satisfactorily, and wore out in a very short time. The present arrangement consists of two screens, both of manganese bronze. The upper one is $\frac{1}{4}$ inch thick with $\frac{3}{8}$-inch perforations, $\frac{3}{4}$ inch from center to center. The inclination is 30°, and the screen is $4\frac{1}{2}$ feet wide by 15 feet long, the last 3 feet, however, being blank. The fine coal and water that pass through this screen fall on the screen *L* which has $\frac{1}{16}$-inch perforations. The coal from both of these screens discharges into a chute which empties into railroad cars. The water and sludge passing through the lower screen go to the tank *M* from which the pulsometers draw.

In the first plants of this type that were designed this tank was a mere sump from which the pulsometers drew. Even with $\frac{1}{16}$-inch perforations there is, however, a considerable amount of solid material in the water — fine coal, slate, and pyrites. As all of the water with the exception of that carried away by the washed coal is used over, the wear upon the pumps and pipes occasioned by this material is serious. The valves wear out rapidly and in one case in the Birmingham district a pulsometer lasted but 18 months. Again, when the simple tank is used the fine sediment — especially the slate and the pyrite — settles on the bottom, accumulating until it acquires a considerable height above the level of the discharge pipe from the tank to the pump. This, after a while, slips down with a rush and clogs up the pumps to such an extent as to prevent their working. Daily shoveling is required to overcome this difficulty. After experiences of this sort Mr. Erskine Ramsey devised the sludge tank that is used with success at this plant. As shown in Figs. 325 *a* and *b*, it is an iron tank, cylindrical in section at the top, funnel-shaped at the bottom. In this tank is a circular deflecting plate *a*. The water, charged with fine coal and impurities, is delivered into the top and at the center, so that there may be an even distribution over the entire surface of the plate. The flow of water, on entering the tank, is indicated by the arrows. With this current of water are carried the fine coal particles, while the impurities, owing to their greater specific gravity, drop from the current, as indicated in the sketch, into the comparatively still water below the level of the mouth of the pump-supply pipe *b* and collect in the bottom of the tank. This refuse is removed by means of the valve *c*, which discharges the sludge into a trough in which it is carried into the waste car under the washer. The relation between the diameters of the deflecting plate and the tank depends upon the relative amounts of

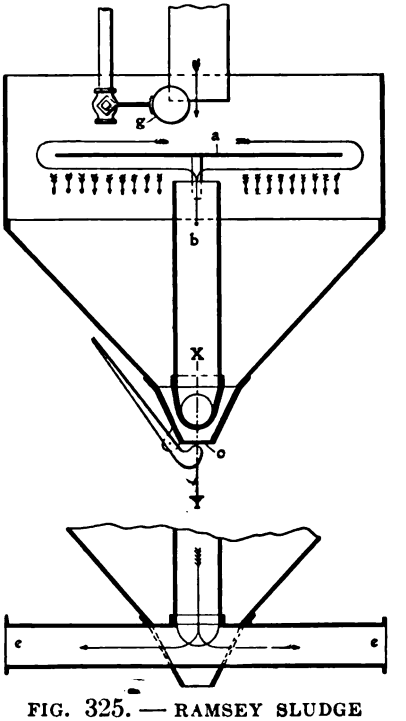

FIG. 325. — RAMSEY SLUDGE TANK.

coal and impurities in the fines and on the difference in the specific gravities of these materials. With too small a plate the impurities will go to the pump with the coal, and with too large a plate the coal will be carried along with the current and become mixed with the slate. Once regulated the results obtained are good. In connection with this tank is the valve for supplying the fresh water needed by the washer. This valve is regulated by a float *g*.

The water, freed from its heavier impurities and augmented by the necessary amount from the fresh-water supply pipe, is taken by the pulsometers through the central pipe *b* and the connections *e*, *e*, and pumped directly into the washer. This is an innovation on former practice, the old plan being to pump into a tank 40 to 60 feet above the bottom of the washer, with a discharge pipe from this tank to the washer, in order to maintain a constant head. At this plant the same object is accomplished at less expense. The pipes between the pulsometers and the washer are connected to a stand-pipe *P* (see Fig. 324*d*) 80 feet in height and open at the top. This acts as a balance on the inflowing current, and is of especial advantage when, as sometimes happens after a stoppage, the material in the washer becomes packed. The pumps then force water up the stand-pipe, until a sufficient head is developed to force the water through the obstructing material. This column pipe has seldom overflowed.

The engine that drives the washer machinery is single, 10 × 16 inches, with 3-inch supply. It furnishes also the power for operating the two screw conveyors, the elevator, and the shaking screen. The steam plant includes six boilers, each 46 inches in diameter by 26 feet long, with two 15-inch flues, and fired with "run of mines" coal. Three boilers are in use carrying 85 to 90 pounds steam pressure, and supplying steam for the pair of hoisting engines at the slope as well as for the washer engine. One fireman is employed.

One man does all the work at the washer. He must watch the engine and keep it and the other machinery oiled; operate the main slate valve three or four times an hour, and also the sludge-tank valve, and load the washed coal into the railroad cars. He is by no means overworked in attending to these duties and has ample time to run the refuse car.

The cost of a 400-ton plant of this sort including royalties to the owners of the patent rights is from $5,000 to $8,000. The cost of the washer itself is about $1,000. The cost of repairs is low; in fact to the washer proper almost no repairs are needed. Water valves, pumps, screens, elevators, etc., need attention and removal from time to time.

The cost of washing the coal at this plant is very low. The daily expenses may be estimated as follows:

For labor at the washer	$2.00
" " " boilers, fuel, etc	4.00
" repairs and supplies	3.00
Total	$9.00

This for 400 tons would be 2.25 cents per ton; and it is quite likely that the actual figures will average even lower than this.

The amount of fresh water needed to take the place of that carried off with the refuse and washed coal was found to be 14,050 gallons. On the day of this test 400 tons of washed coal were produced, and the washer was running for 11 hours. The average water per ton of washed coal was 35.1 gallons; average per minute, 21.3 gallons. The amount of refuse in a day's run is about 18 tons, and the coal content of this is 12.29%. The Ramsey sludge tank is of the utmost value in getting rid of the worthless material. About 7 tons per day are drawn from it, only 16% of which, or 1.1 tons, is coal. The entire loss on 425 tons treated is 3.4 tons or 0.8% of the total coal washed.

By washing, the ash in the coal is reduced from an average of 9.98% to 5.78%. In other words the washed coal contains 42% less than does the unwashed coal. The reduction in sulphur is over 15% of the total sulphur, and the gains in volatile material and fixed carbon are about 4 and 5% respectively. In connection with this it must be remembered that the washer is treating material from ¾ inch down without preliminary sizing. If the material was carefully sized previous to washing it is probable that a much more perfect separation of the sulphur would result.

Coke from the washed coal can be recognized at the door of the oven by the difference in the amount of braize. To determine the improvement in this respect, the weights of the ash piles in front of a number of ovens were carefully taken, showing the average amount, when coke is made from unwashed coal, to be 521 pounds, and, with washed coal, 238 pounds, or a saving of 283 pounds of coke per oven. If the output from each oven is taken as 2.5 tons the saving is 5.66%.

This gain in the output of marketable coke is sufficient, without charging the furnaces any higher price for their fuel, to compensate the mines for the cost of washing, and for the material formerly put into the ovens but now sent to the waste dump. Assuming a selling price of $2 per ton, the saving in braize at the ovens is 11.32 cents, in the cars 4 cents, or in both items 15.32 cents per ton of coke. The refuse from the washer, formerly coked, is 6% of the total. To make a ton of coke 1.67 tons of coal are required. Six percent. of this, or 0.1 ton, may be called, from the standpoint of the mines, the loss in coal per ton of coke. Assuming as an average cost of coal, 80 cents per ton, the increase in cost of coal per ton of coke is 8 cents. To this must be added the cost of washing or 2.25 cents per ton of coal, or 3.75 cents per ton of coke. The total is 11.75 cents, against which there is, as above, a saving of 15.32 cents or a net saving of 3.5 cents per ton of coke, due to washing.

In the blast furnace, the washed coke is distinctly advantageous. There is much less of that fine material from which no valuable service is realized. The washed coke will also sustain a heavier burden than the unwashed, being stronger. The cost of coke per ton of iron has been reported as 50 cents less on furnaces using washed coke.

The above example has been given to show the student what advantages may be gained in washing coal previous to coking, even where the washing is not an absolute essential to the coking process.

The Robinson type of plant recommends itself for its low first cost, low labor cost, compactness, economy in water, small waste of coal, and ability to treat with good results material that has not been sized. With regard to the latter point it may be said that where a considerable reduction in the sulphur content is desired fairly close sizing is required. In the North they have been replaced by other washers and probably the reason for their failure has been that the material fed to them was not sufficiently sized or not sized at all. The principle of operation of the process depends for an approximately perfect separation upon close and accurate sizing.

Anthracite Coal Practice.

§ 795. When anthracite coal comes from the mine the lumps are of all sizes and it is mixed with a greater or less amount of slate coal, bone coal, and slate. It is not generally marketable in this form but requires preliminary treatment to fit it for use. The larger lumps must be broken, the coal separated into the various sizes known as steamboat, egg, stove, chestnut, pea, etc., and the slate, bone, dust, etc., separated by mechanical means.

Anthracite coal is compact and contains but little volatile matter. The

lumps when ignited burn only on the surface and consequently require free access of air to promote combustion. It is this that makes it necessary to separate the particles into a series of sizes. Where it is attempted to burn a mixture of all sizes the access of air is impeded by the small lumps filling the spaces between the large lumps.

§ 796. TRADE SIZES FOR ANTHRACITE COAL. — Table 146 shows the distance between the screen bars or the diameter of screen opening which determines the various sizes of anthracite coal as known to the trade.

TABLE 146. — TRADE SIZES OF ANTHRACITE COAL.

Trade Name of Size.	Size of Opening in Inches, Over and Through which the Different Sizes Pass.	
	Through.	Over.
Lump	.....	6
Steamboat	6	4½
Broken or Grate	4½	2¾
Egg	2¾	2
Stove	2	1⅛
Chestnut	1⅛	¾
Pea	¾	½
No. 1 Buckwheat	½	¼
No. 2 Buckwheat	¼	⅛
No. 3 Buckwheat	⅛	5/16
Culm	5/16	.....

Different companies name their sizes below that of No. 1 buckwheat differently. For instance, by some No. 2 buckwheat is called rice and No. 3 buckwheat is called buckwheat barley. Sometimes these sizes are mixed and called birdseye. The sizes given in Table 146 are what is known as standard meshes, but they are not adhered to strictly by all of the companies. The diameters of the round holes in the shaker screens that are now used extensively in sizing anthracite are given in Table 147.

TABLE 147. — STANDARD DIAMETER OF SCREEN OPENINGS.

Name of Size.	Diameter in Inches of Openings over which Size Passes.
Steamboat	4½
Broken	3¼
Egg	2¼ to 2 5/16
Stove	1½ to 1⅛
Chestnut	¾ to ⅞
Pea	½ to ⅝
No. 1 Buckwheat	¼ to 5/16
No. 2 Buckwheat	1/8
No. 3 Buckwheat	3/16 to ¼
Culm, through	1/16 to ⅛

The larger sizes are used for blast furnaces and sometimes for generating steam. The intermediate sizes are mostly used for domestic purposes. The smaller sizes are used in generating steam. Very little of the lump and steamboat sizes are now made, but the amount of the fine sizes is constantly increasing, owing to the fact that large quantities of these sizes are being recovered from old culm banks.

As different prices are paid for the different sizes produced, it is important that the percentage of the size for which the highest price is paid should be as large as possible. The percent. of various impurities that will be tolerated in the coal as prepared for market varies with the various companies and with

the demands of the market; when demand is brisk a larger percentage of impurities is allowed than when demand is slack.

§ 797. Brief Outline of the Method of Preparing Anthracite Coal for the Market. — Fig. 326 shows the general method adopted in preparing anthracite coal for the market. The coal coming from the mine is dumped over the inclined bars *a*, placed about 3 inches apart. These make the first separation. What passes between these bars, that is, the sizes from 3 inches to 0, falls on another bar screen with bars spaced 2¾ inches apart; the oversize of this latter screen goes to the egg-coal chute; the undersize is further treated by means of trommels or shaking screens known as mud-screens. These separate the stove coal and chestnut coal from each other and from the sizes smaller than chestnut. These smaller sizes pass to a counter mud-screen (sometimes called wing mud-screen), where they are separated. The oversize of the bar screen *a* goes over the bar screen *b*, which has bars spaced about 4½ inches apart. The oversize of this screen consists of the lump coal and steamboat coal and passes over the platform *c* where the bone and any slate are picked out, and then on to the lump-coal pocket, or, in case there is no demand for these sizes, to the crusher rolls and thence to the main rolls and main screens for separation into the smaller sizes. As there is little demand for lump and steamboat coal these are not usually separated, but they may be separated by placing a bar screen with bars spaced 6 inches apart below the screen *b*, so that the steamboat passes through and the lump coal over the screen.

The material that goes through the screen *b* consists of the sizes known as broken and egg, that is, the sizes between 2½ and 4½ inches in size. These sizes, together with the material from the crusher rolls, go to the broken and egg screen, which effects a separation between the two sizes and separates from both sizes any of the smaller sizes which may be present. In case there is no market for the broken and egg sizes these pass to the main rolls and then go to the main screen, sometimes called the main wing-screen, without being sent to the broken and egg screens as previously described. To this main screen also goes the material smaller than egg coal, which has passed through the broken and egg screen and in this main screen, the stove, chestnut, and pea sizes are separated from one another and from the smaller sizes. These smaller sizes pass to the main counter or buckwheat screen which separates No. 1 buckwheat, No. 2 buckwheat, and No. 3 buckwheat from one another, and all of them from the culm.

The slate is picked out of the coal, as it is running down the chutes, by men or boys who sit alongside the chutes, or it is separated by automatic slate pickers or by jigs.

Rolls or screens that are supplementary to the regular method of preparation are called pony rolls and pony screens. An instance of this is shown in Fig. 326. These rolls are used to break up the broken coal coming from the broken and egg screen in case there is no market for this size, but there is a demand for the smaller sizes.

The arrangement shown in the cut must be understood to be a generalized arrangement which may or may not be followed exactly in practice. Each breaker will show certain variations intended to adapt it to local conditions.

BREAKING ANTHRACITE.

§ 798. As the coal comes from the mine the percentage of the various sizes is about as follows: lump and steamboat, 50%; broken, egg, stove, and chestnut, 35%; smaller sizes, 15%. Nearly all of the lump and steamboat sizes are broken into smaller sizes from *broken* down. Every precaution has to be taken

to produce as large a percentage of the coarser sizes as possible, but in spite of all that can be done from 25 to 30% of pea coal and sizes smaller is made. The necessity for graded crushing is perhaps nowhere better exemplified than in the case in hand. A separate set of rolls should be provided for breaking each size to the size next smaller. If a greater reduction than this is attempted, as for instance when a certain size is broken to the second size below it, the production of fine sizes is nearly twice as great as where the reduction is made in two steps.

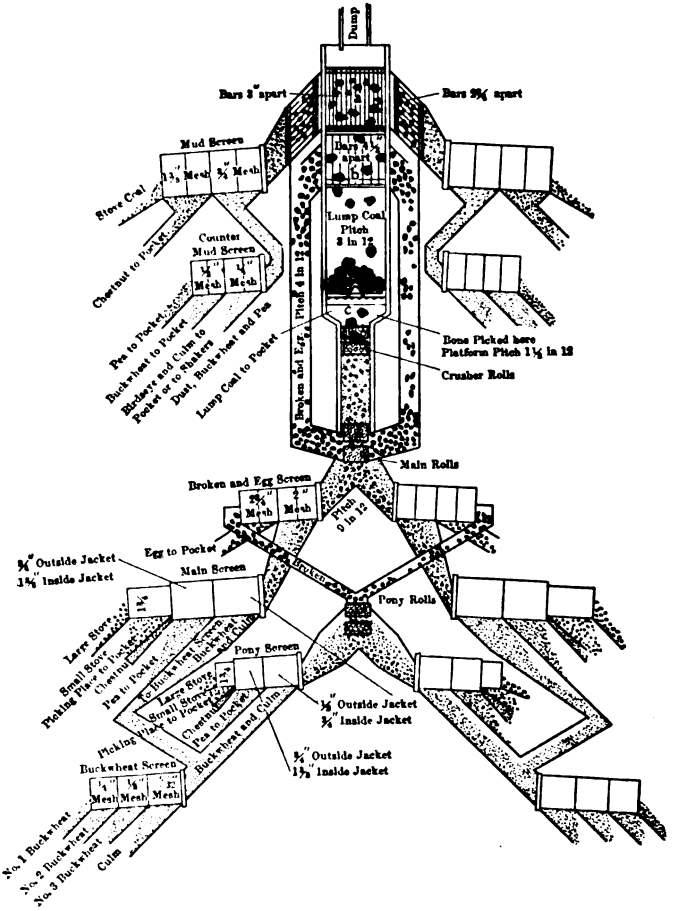

FIG. 326. — PREPARATION OF ANTHRACITE FOR MARKET.

§ 799. CRUSHING ROLLS. — The only two forms of crushers that are used to any extent for crushing anthracite coal are toothed and corrugated rolls. These have been described in a previous article and are essentially the same machines that are used for the crushing of bituminous coals. Where toothed rolls are used the form with the inserted teeth is the form in most general use.

SIZING THE COAL.

§ 800. For sizing coal either fixed or movable screens may be used. Bars are used to do the rough sizing of the coarse sizes and to separate the dust and

fine coal from those sizes. Bar screens are not suitable for exact sizing since the openings are much longer than they are wide. This permits long flat pieces of coal or slate to pass through the screen together with much smaller pieces that are approximately cubical in shape. The principal requirement in bar screens is that the coal shall run over them freely. To this end the tops of the bars are made rounding. If this is not done their work is likely to be much less efficient as there is not as much tendency for the coal particles to pass into the openings between the bars.

There are three types of bar screens in common use: (1) bars supported at both ends, similar to the grizzlies used in ore-dressing operations; (2) finger bars supported at one end; and (3) oscillating bar screens, similar to the oscillating grizzlies that are sometimes used in ore dressing.

§ 801. BARS SUPPORTED AT BOTH ENDS. — This form of screen is not essentially different from the grizzlies that are used in ore dressing. As has been previously stated the chief difference lies in the form of bars that is used. Fig. 327 shows a common form of bar screen. The top of each of the bars is cylindri-

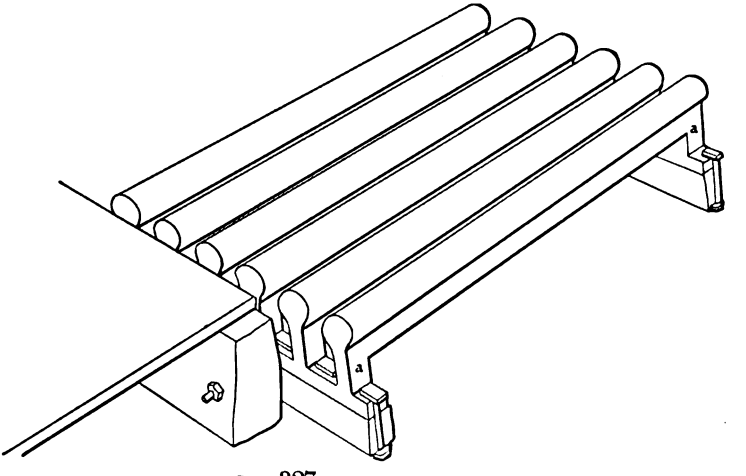

FIG. 327. — BAR SCREEN.

cal and projects beyond the web *a* that supports it. This allows any lump that is small enough to pass between the rounded ends of the bars to fall through without jamming. The bars are made about 4 feet in length. The base of the web is made 6 inches in width. The head of each bar is of slightly larger diameter at the upper than at the lower end. This gives a gradual increase in the width of the opening between the bars as the coal passes from the upper end of the screen to the lower and prevents flat particles becoming wedged between the bars. The bars are fastened to the supports by bolts with T heads as shown in the illustration.

Several sets of these bars are usually used in series, the head end of one set being placed slightly lower than the lower end of the first. This gives the material coming over the screen a chance to turn over at each drop, so that small pieces that may be riding upon larger pieces are shaken out and pass through the space between the bars.

The method of supporting the bars is sometimes made such that the bars are adjustable as to space and may be placed at any required distance apart, depending upon the size of coal it is desired to separate.

§ 802. FINGER BARS. — These are bars supported at the upper end only. The lower end of the bars is made narrower than the upper end to prevent wedging of particles between the bars. The upper ends of the bars are bolted separately to the supporting beam, or the entire series of bars may be cast in one piece or in segments each containing several bars and so bolted.

§ 803. OSCILLATING BARS. — Fig. 328 shows a set of oscillating bars. This

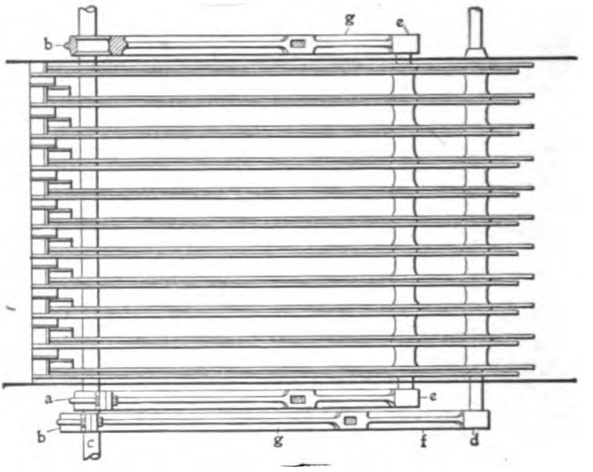

FIG. 328*b*. — PLAN.

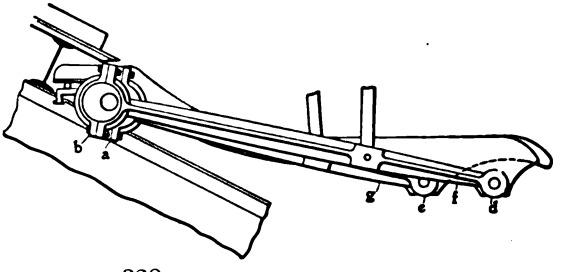

FIG. 328*a*. — OSCILLATING BAR SCREEN.

consists of two frames each carrying a set of narrow bars. These bars are placed far enough apart so that the pieces of coal of the desired size can pass between the bars of each set. The bars are moved back and forth by eccentrics *a* and *b*, placed 180° apart on a main driving shaft *c*. The eccentrics are connected with the bars at the points *d* and *e* by the rods *f* and *g* in such a manner that the motion of the bars is approximately horizontal or at most but slightly inclined. The eccentrics have a 3-inch throw.

The coal that is to be sized is fed to the upper end and is slowly transported by the motion of the bars to the lower end. The motion of the bars also tends to shake out the dust and particles that are fine enough to pass through the screen into the hopper below.

Screens of this sort are very efficient and are said to require less attention than do the stationary bar screens. This device, moreover, does not require so much mill height as do fixed bars screens which are longer and more steeply inclined.

The upper set of bars in the breaker are known as the *spreader bars*. These bars radiate from the point at which the coal is dumped and spread the coal evenly over the first set of straight bars. The first four sets of bars are set with the bars spaced 5 or 6 inches apart and so that the bars of one set come opposite the openings between the bars of the second set and so on.

The oversize of these bar screens comes to the picking platform *c* in Fig. 326.

§ 804. SCREENS FOR SEPARATING COAL. — Screens for separating coal are of two kinds, fixed and movable screens. A fixed screen is usually a perforated steel plate laid upon a proper support and at a suitable inclination so that the coal will slide over it freely. The handling of the coal in the breaker causes a certain amount of crumbling and consequent dust in the coal. This material must be separated from the coal before shipping it and it is therefore customary to pass the coal coming from the pockets over a fixed screen of perforated plate on its way to the car. A set of bars is sometimes used for this purpose. Movable screens are of two types: revolving screens somewhat similar to the trommels used in ore dressing and shaking screens.

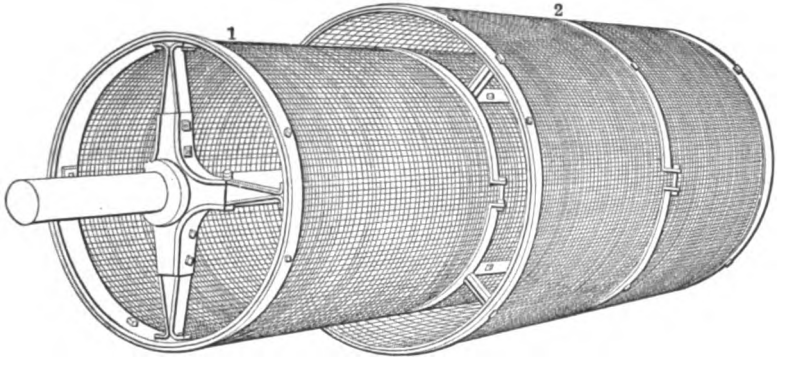

FIG. 329. — REVOLVING SCREEN.

§ 805. REVOLVING SCREENS. — After having studied the revolving screens used in ore dressing and their mode of operation it does not seem necessary to enter into a complete discussion of the revolving screens that find application in the preparation of coal for the market. The necessity for exact work that exists in sizing anthracite coal requires that the trommels be very much longer than are those that are used in ore-dressing operations. A screen such as is shown in Fig. 329, and which is used to separate several sizes of coal, is quite often 16 to 30 feet in length. The diameter of the jacket (1) is usually 5 or 6 feet, while the diameter of the double-jacketed part (2) is perhaps 8 feet. These screens are set at an inclination of $\frac{1}{4}$ inch to the foot, so that the coal will travel slowly from one end to the other and give all of the particles that are small enough to pass through the screen openings a chance to do so. The trommels are run at a speed of from 8 to 10 revolutions per minute; the larger trommels being revolved more slowly than are those of less diameter, in accordance with what has been said in the chapter on the laws of screening and classifying in an earlier part of this volume.

The increased size of these screens sometimes makes it advisable to support them from below on friction rollers, as in case of the screen shown in Fig. 330. This screen is 54 feet in length and 7 feet in diameter. Double-jacketed screens are often used for the purpose of decreasing the amount of space occupied by the screens in the breaker. Where these are used the mesh of the screen

in the outside jacket is always smaller than the mesh of the inside screen. Double-jacketed screens may have the outside jacket extending throughout the entire length of the screen or for only a portion of its length. The screens may be driven either by bevel gears on the screen shaft or by spur gears on the periphery meshing with a pinion on the driving shaft. Either punched plate or wire-cloth screens may be used. Wire cloth gives of course the largest percentage of opening, and as the wear is not as great as in the case of ores it is often used in preference to punched plate.

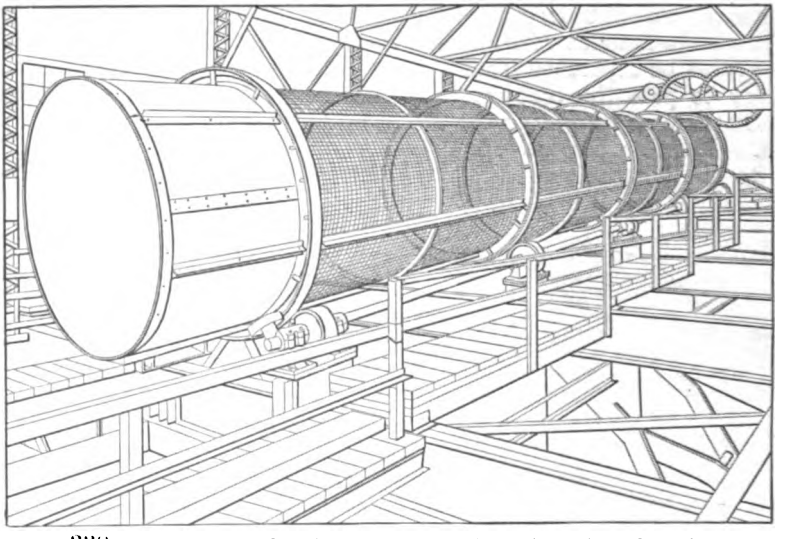

FIG. 330. — LONG REVOLVING SCREEN SUPPORTED ON ROLLERS.

§ 806. *Capacity and Efficiency of Revolving Screens.* — The capacity as well as the efficiency of revolving screens depends upon the amount of screening surface, the inclination or slope, and the speed at which it is run. The greater the amount of screening surface for each size the better is the separation likely to be. If the slope of the screen is increased the speed at which the coal can be put through the screen is correspondingly increased, just as we have seen in the case with the trommels used in ore dressing. The quality of work, however, is not as good as where a moderately flat slope is used. Screens to do their best work should not be overcrowded. Automatic feeders are sometimes used to assure that the feed shall be constant and just right in amount. Table 148 shows the approximate screen area that should be allowed for the different sizes and for an output of 1 ton in 10 hours.

TABLE 148 — SCREEN AREA REQUIRED FOR GIVEN OUTPUT.

Name of Size.	Diameter in Inches.	Area in Square Feet Required for One Ton in Ten Hours.
Egg	2½	0.75
	2¼	1.00
Stove*	1¾	1.25
Chestnut*	⅞	1.75
Pea†	½	2.50
No. 1 Buckwheat†	⅜	3.25
No. 2 Buckwheat†	⅛	4.25

* Reduce 20% for wet coal. † Reduce 30% for wet coal.

§ 807. SHAKING SCREENS OR SHAKERS. — These are screens with flat or slightly inclined screening surface and which are given a back and forward motion similar to that which is imparted to a hand sieve. This motion is imparted to the screen by eccentrics and connecting rods, and together with the inclination of the screen causes the coal which is fed onto the screen at the highest part to travel along the screen. The sizes smaller than the openings in the screen pass through while the particles of larger diameter than these openings remain on the screen and are discharged into a chute at the lower end. The screens are placed one over another in a series of two, three, or more, the screens having the largest openings being placed on the top, and those with the smallest openings being placed at the bottom of the series.

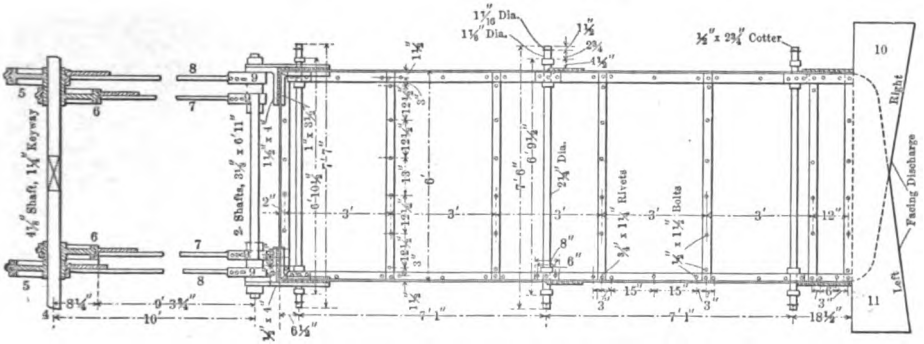

FIG. 331*b*. — PLAN.

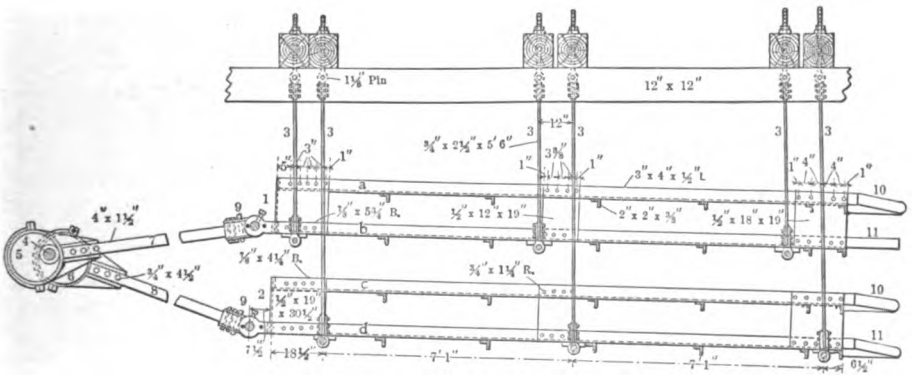

FIG. 331*a*. — CHRIST SHAKING SCREEN. ELEVATION.

Figs. 331*a* and *b* show one of two Christ shaking screens in use by the Stevens Coal Company at West Pittston, Pennsylvania. Fig. 331*a* shows the elevation and Fig. 331*b* the plan. The screen shown in the cuts is a double-deck screen, each deck having two screening surfaces. The decks (1) and (2) are hung from above by the toggles (3). They receive a reciprocatory motion by means of the eccentrics (5) and (6) on the shaft (4). These eccentrics are set at 180° and are connected to the decks by the connecting rods (7) and (8). The connecting rods (7) and (8) are provided with cotters (9) to take up lost motion. The screening surfaces *a*, *b*, *c*, and *d* are of punched plate and have openings equal to $\frac{1}{16}$, $\frac{1}{2}$, $\frac{11}{32}$, and $\frac{3}{32}$ inch respectively. The coal which comes onto the

head of the screens is divided into five sizes, four of which are discharged through the discharge spouts (10) and (11), and the last, the undersize of $\frac{3}{32}$ inch, passes into a chute beneath the screen. The dimensions of the screen are shown in the cut.

The number of screens and their arrangement depends upon the purpose for which they are designed. It will be different in the case of a washery that is taking material from an old culm bank from the arrangement that would be adopted in a breaker. Where coal is being recovered from culm there is a large percentage of fine sizes for which adequate capacity must be provided.

The screens that are found in use vary in width from 4 to 10 feet and in length from 8 to 40 feet. As these screens are very heavily built their motion is liable to cause very serious vibration of the building in which they are located unless the motion of one frame compensates the motion of another. This is the reason for setting the eccentrics of the screens at 180°. If three frames are used the eccentrics are set at 120°, and if four frames they are set at 90°. The frames may be supported by chains, by spring boards or by toggles, as is the case in the Christ screen.

The inclination of the screens vary from $\frac{3}{4}$ inch to 1 inch to the foot, and the greater the inclination the more rapidly the coal will pass over the screen. The length of stroke of the screens varies from $4\frac{1}{2}$ to 6 inches, and the screens make from 140 to 180 strokes per minute. Shaking screens may be run dry, but they are usually run with water as the capacity is thereby greatly increased.

The screen surface that is required to prepare 1,000 tons per day in the Schuylkill region is given below.

	Square Feet.
Broken	96
Egg	96
Stove	103½
Chestnut	144
Pea	144
Buckwheat	155
Rice	155

Shaking screens have the advantage that the entire area of screen surface is available for the work of sizing. They occupy less height than do revolving screens and are particularly applicable where the coal is wet and there is a tendency for it to stick. Their principal disadvantage arises from the vibration which they impart to the framing of the building.

§ 808. COXE GYRATORY SCREEN. — This screen has been described in a previous article and is shown in Fig. 124. The screen has been used quite extensively in the washeries of the Cross Creek Coal Company and has been tried from time to time in other places. It has been found to be expensive to keep in repair and had probably failed to be more generally adopted for that reason.

SEPARATING THE REFUSE FROM THE COAL.

§ 809. This operation begins properly in the mine. As much of the slate and bone as possible should be separated from the coal before it comes to the breaker. This should be done so as to avoid the expense of hoisting this material to the surface and handling it there. In flat and moderately thick deposits a considerable part of the waste may be so separated and used as filling, but in steeply inclined or thin seams this cannot be done. The light and other underground conditions also prevent a perfect separation from being carried out underground.

§ 810. HAND PICKING. — Hand picking is one of the earliest methods used to separate the refuse from the coal and it is still in use in many of the breakers. Hand picking is almost invariably used to separate the rock and

slate from the lump and steamboat sizes as the coal passes over the platform at the head of the breaker. Slate is also sometimes hand picked from the smaller sizes coming from the screens or jigs. This work is done on picking tables or chutes.

§ 811. *The Picking Platform.* — When the coal is dumped on the bars at the top of the breaker, the large lumps pass down over the bars to the platform *c* shown in Fig. 326. Here men separate the lumps of pure coal from the slate and push each into its proper chute. The lumps that consist partly of pure coal and partly of slate are broken when it is possible to do so and the coal and slate or bone each sent to its proper chute. In case these lumps cannot be so broken they are pushed into a chute which conveys them to a pair of rolls where they are crushed. Platforms are preferable to chutes at this point for the reason that the coal passes through a chute so rapidly that picking is imperfectly done. Sometimes the coal after coming over the bars passes onto a traveling picking table made up of a series of steel plates 12 inches wide by 48 inches long and fastened to a heavy chain carried on rollers. This table is similar to the picking belts in use in ore-dressing operations and travels at the rate of 20 to 30 feet per minute. Men stand upon either side of the table and pick out the pure slate and bone, throwing them into separate chutes. The mixed lumps are thrown on platforms at the side, where the bone and slate can be chipped away with small hammers; the pure coal passes over the end of the table into chutes or to the rolls to be re-crushed in case there is no market for these coarser sizes.

Where the coal coming from the jigs or the screens is hand picked, the picking floor is usually situated just below the jigs or the sizing screens. The coal runs from the jigs or screens by gravity down a number of chutes alongside of which men or boys are stationed, and who pick out the slate, throwing it into a slate chute alongside or into a box which is emptied when it becomes filled. The great disadvantage of this picking is that the picker can only remove the slate that is on top and as a consequence a large amount of slate escapes him and the work is thereby made very imperfect. Another objection is the duplication of work that is likely to result from the fact that several pickers may pick up a lump of coal of slaty appearance, each returning it into the coal chute. The work is very disagreeable for the pickers in a dry breaker because of the dust. To make the work more nearly automatic and affect a better separation of the slate and bone, mechanical pickers have been devised.

§ 812. Mechanical Slate Pickers. — These depend for their operation upon the different ways in which coal and slate break into lumps, upon the fact that the coefficient of sliding friction of slate is greater than that of coal, upon the difference in the surface of the lumps, upon the different velocities with which coal and slate slide down an inclined chute, and upon the differences in their specific gravities. There are a considerable number of these devices, all depending upon the same general principles. Three of the most interesting of these will be described somewhat in detail.

§ 813. *The Emery Slate Picker.* — Fig. 332 shows a side elevation of this picker. As will be seen in the illustration it consists of four troughs (1), (2), (3), and (4), placed one after another so that the material fed onto the first trough at the head end will pass by gravity through all four of the troughs. At the upper end of each trough is a screen (5) which serves to remove the dust; following this is a metal plate (6) and a plate of slate (7). The lumps of slate and all but the very purest lumps of coal are retarded when they strike the stone plate (7) sufficiently so that they pass through an opening at *a* in the bottom of the trough and come upon the screen (5) in the trough (2). The very purest pieces of coal are very little retarded by the slate plate and, owing to

the momentum that they have acquired, they jump the opening in the trough at *a* and pass down the overchute (8) to the proper pocket. The width of the openings at *a* is adjustable, and by making them successively narrower in successive troughs the desired separation is at length made.

The lower ends of the troughs (1), (2), and (3) are supported by the pivots (21), (22), and (23). This enables the slope of the first three troughs to be varied by turning the wheel (15) which controls the slope of the troughs through the crank (16) and the series of levers shown on the side of the troughs. The levers (17), (18), (19), and (20) serve to afford an adjustable slope to the slate plates (7). The levers (11), (12), (13), and (14) serve to adjust the width of the openings at *a*.

Sometimes to save space the troughs, instead of being placed as is shown in the illustration, are placed one directly below the other, successive troughs sloping in opposite directions.

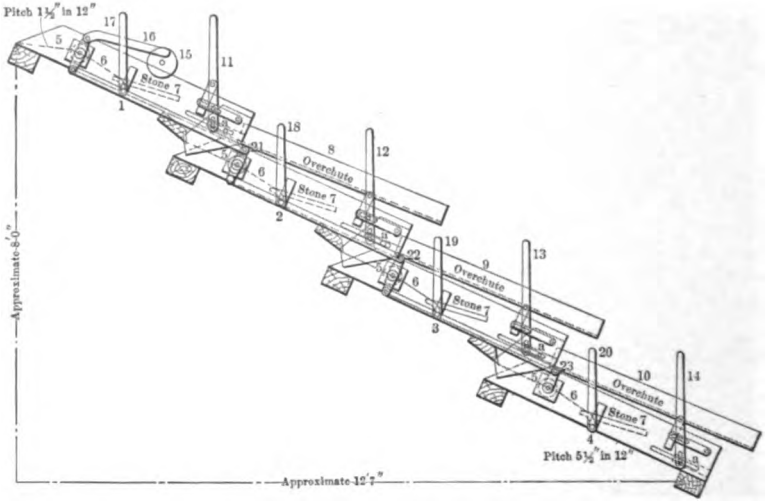

FIG. 332. — EMERY SLATE PICKER.

This automatic picker separates the slate from the coal much more satisfactorily than can be done by hand picking.

§ 814. *The Langerfield Separator.* — Figs. 333*a* and *b* show this device in plan and cross-section. The material from the hopper (1) is fed upon the plate (2) in parallel lines by means of the divisions (3). The wheel (4) allows one lump at a time to slide down over each section of the plate (2). The curve at (6) serves to turn over any flat pieces and thus prevents a piece that is slate on one side and coal on the other from acting either wholly as slate or wholly as coal. The upturned lip at (7) projects material passing over it farther than would be the case if it were not upturned, and causes a separation into three products; the very purest coal passes into chute (8) and the less pure into chutes (9) and (10). The lip at (11) affects a preliminary separation, the purest material passing down the chute (12) and the less pure down the chute (13). The lower end of the chute (13) has an upturned lip which serves to send the pure slate into the chute (14) and the mixed slate and coal into the chute (15). The product passing down the chute (15) will have less coal in it than the product that goes into chute (10).

§ 815. *Pardee Spiral Anthracite Coal Separator.* — This separator is shown

in Fig. 334. This separator consists of a series of three spiral chutes *E*, *E*, *E*, called slate jackets, and a fourth and larger spiral *G* called the coal jacket. These spirals encircle a shaft 6 inches in diameter and 10 feet in length. The chutes are each made up of segments joined so as to give an unbroken spiral surface from top to bottom. The upper parts of the slate jackets are supported by the flanged slate rods *K*, and the lower parts by the straight slate rods. The coal jackets are supported by the flanged coal rods *L*. These rods radiate from the central post. The upper end of the slate jackets *E*, *E*, *E*, are provided with flanges *D*, *D*, *D*, and are continued as the flanged feeding chutes *A*, *B*, *C*, into which the material to be separated is fed. The coal jacket *G* is provided with the large flange *F*.

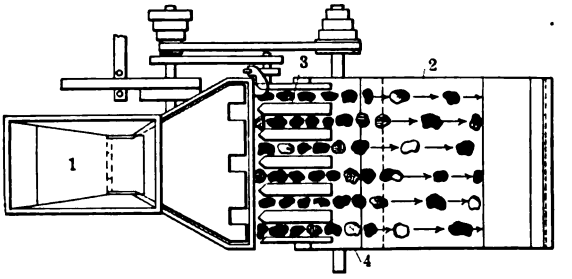

FIG. 333*b*. — PLAN.

The mixture of coal slate and bone to be separated is fed into the delivery chutes *A*, *B*, and *C*, by a chute so arranged as to deliver one-third of the feed to each of them. In passing down the spirals, the coal, sliding more easily than the slate, attains a greater velocity than the latter; and in following the spirals, centrifugal force causes it to move outward toward the edges of the spirals while the slate does not move so far. In this way the coal gradually falls over the edges of the slate jackets into the coal jacket below and is conveyed by it to the delivery spout at the bottom.

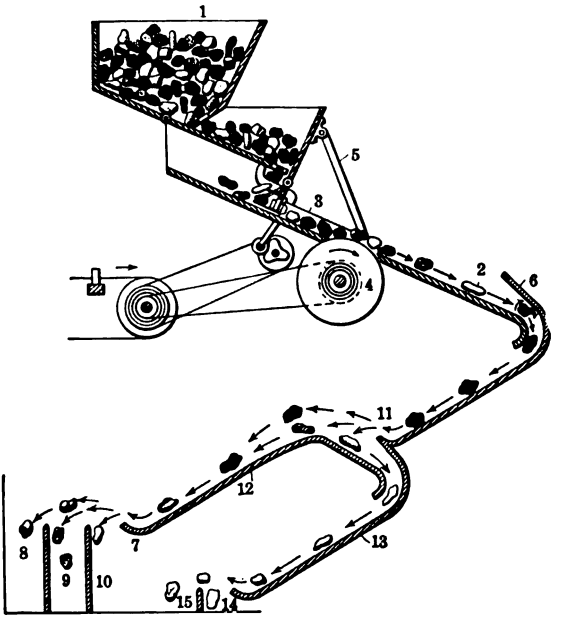

FIG. 333*a*. — THE LANGERFIELD SEPARATOR.

The bone in the coal is affected somewhat in the same way as the coal and, after the coal has passed over the edges of the slate jacket into the coal jacket, constantly tends to work to the outer edges of the slate jacket, while the slate clings to the inner edges of the same. At the bottom of the slate jackets are the bone plates *I*, *I*, *I*, which deliver the bone to bins or chutes and the division plates *H*, *H*, *H*, over which the slate is delivered to bins or chutes. These division plates are supported by short division rods *N* radiating from the central post.

The cleaned coal is finally delivered at *X*. The flanges *D*, *D*, *D*, on the upper end of the slate jackets *E*, *E*, *E*, prevent any pieces from falling over the sides of the chutes until coal, bone, and slate have adjusted themselves to the

respective positions on the slate jackets. The slate jackets are made up of a number of segments so that the pitch of the spiral can be adjusted to any particular coal by inserting wooden wedges under the lower outside corner of each plate. Where it is necessary that this change of pitch be made quickly, an arm is fastened under the lower end of each plate and attached to perpendicular rods that can be moved up or down by a common lever. By moving this lever every slate jacket can be adjusted from $\frac{1}{16}$ inch to $1\frac{1}{4}$ inches.

The pitch of a separator is the depth of any one spiral in one turn around the central post. In the separators made this varies from 24 to 30 inches, being generally 26 inches. The separator is 9 feet high and the width varies according to the size of the coal for which it is intended. The separators are made narrower for the fine sizes than for the coarse sizes.

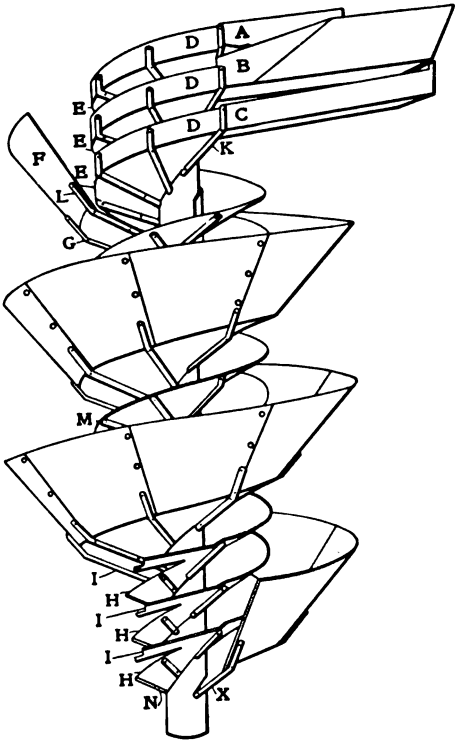

FIG. 334. — PARDEE SPIRAL ANTHRACITE COAL SEPARATOR.

A modified form of this separator has been introduced in which the spiral is revolved by gearing at the top of the central post. The effect of this is to increase the centrifugal action and the frictional action, the rotation being in the direction of the flow of the coal. In this form of separator the pitch of the spirals is somewhat steeper than in the original form. Means are provided for varying the speed which renders the separator more readily adjustable. The spiral separator can be used for either wet or dry coal and is provided with an attachment by which it can be readily adjusted for either one.

§ 816. ANTHRACITE COAL JIGS. — The devices that have been described up to this point for separating the waste from anthracite coal, with the exception of the spiral separator, have all been applicable only when the coal is comparatively dry and then only for sizes larger than pea coal. Where the coal is wet and dirty as it comes from the mine, or where fine coal is being recovered from culm banks, the separation is accomplished by jigging. The average specific gravity of anthracite coal is 1.5, while the specific gravity of slate is 2.5 to 2.8, and that of pyrite about 5. A separation can therefore be effected by jigging. As the difference between the specific gravities of the coal and the bone and slate that are found mixed with it, and which it is desired to separate from the coal, is small, it is necessary to separate the particles by screens into a number of products in which the particles are as near as possible of uniform size and to feed the jigs slowly and regularly. Before jigging it is customary to separate the coal into lump, stove, chestnut, pea, and No. 1 buckwheat sizes. The sizes larger than egg and smaller than No. 1 buckwheat are seldom treated by jigging.

As mine water often has to be used for jigging, and as this is often acid and attacks the iron parts of jigs with which it comes into contact, repairs are con-

stantly needed. Much of the slate and some of the bone occurs in flat pieces that are buoyed up by the water and pass off with the coal. The jigging of anthracite coal is therefore a careful and expensive operation. A perfect separation cannot be made and the coal that has been jigged is often hand-picked or run over a special form of automatic picker similar to some of the types of these devices that have been previously described.

The jigs that are used in washing anthracite coal are very similar to those used in the washing of bituminous coal, and we find the same two general types in use *i.e.*, piston jigs and pan jigs. Almost every company has its own type of jig, differing from those in use by the other companies in minor details. But two of the numerous types of these jigs need be described in detail, the Lehigh Valley jig as an example of the piston jigs, and the Christ jig as an example of the pan jigs.

§ 817. *The Lehigh Valley Jig.* — The Lehigh Valley jig, shown in Figs. 335*a* and *b*, is a simple piston jig, the general construction of which will be sufficiently understood from the cut. There are two scraper conveyor lines (1) and (2). The conveyor (1) serves to remove the coal and the conveyor (2) serves to remove the slate. Many of the similar jigs in use in the anthracite coal regions do not have the automatic slate discharge, but are provided with a hand-operated discharge. The automatic discharge requires less attendance but does not permit of as close inspection as does the hand-operated discharge. The jig is sometimes constructed in such a way that one plunger compartment serves two screen compartments, one on either side. In some cases the screens are inclined away from the discharge instead of toward it. This is done in the case when the separation of the slate from the coal is especially difficult, the idea being that it preserves a portion of the slate bed on the screens when the gates are opened to let out the slate.

§ 818. *Christ Jig.* — The Christ jig shown in Figs. 336*a*, *b*, and *c* is a pan jig. The rectangular pan moves up and down within a water-tight tank 11 feet long, 5 feet 4 inches wide, and 6 feet 9 inches high, built of white-pine plank lined and well calked to prevent leakage. Inside of these planks (1) is the lining (2) of matched pine floor boards. The bottom (3) of the tank is inclined and leads to a cast-iron boot (4) placed at the bottom and front of the tank. The cast-iron jig box (5) a cross-section of which is shown in Fig. 336*c*, is placed inside the wooden tank so that the rear end is a short distance from the inner surface of the tank, and the top is about 1 foot below the top of the tank timbers. The jig box is provided with two guide shoes (6) on either side. These are bolted to the extension plates (7) in such a way as to incline the box toward the front end of the tank and they move up and down between the guides (8) fastened to the tank timbers. The pan (5) is hung on each side at a point (9), a little back of the center by a rod (10) connected to an eccentric (11) on the main driving shaft (12) of a 12 horse-power engine (13).

The pivoted adjustable gate (14) is raised or lowered by means of a hooked screw (15). The front wall (16) of the box or jig pan (see Fig. 336*c*) does not extend as high as the sides, and has an opening in it, at the sides of which is pivoted a discharge chute (17), with a perforated bottom. The bottom of the pan (5) and the bottom of the pivoted gate (14) are also perforated.

On the inside of the front wall (16) of the pan (5), between the front wall and the ribs cast on the side walls, is a secondary plate (18) that is vertically adjustable so as to vary the size of the slate outlet by means of the screw (19) riveted to the plate. The screws (15) and (19) are supported by the arms (20) and (21) and are regulated by means of the worm gearing with worm wheels on the screws (15) and (19). A cast-iron division plate (22), riveted to the side walls of the pan (5) and extending only part way to the bottom, acts as a partition

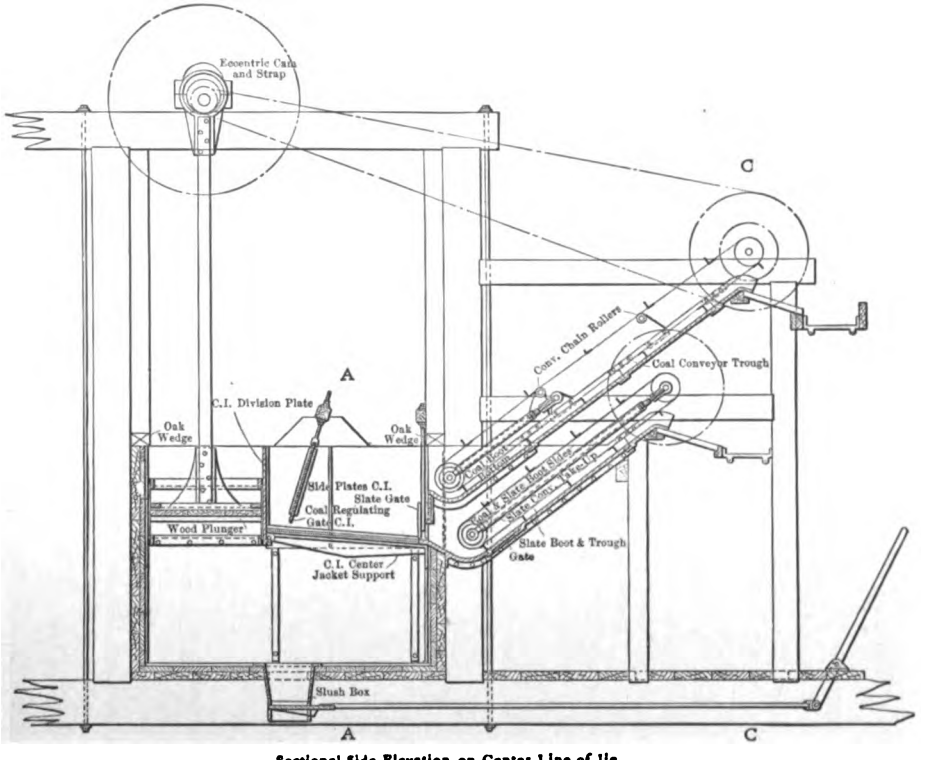

Sectional Side Elevation on Center Line of Jig

FIG. 335*a*. — SECTIONAL SIDE ELEVATION OF LEHIGH VALLEY JIG.

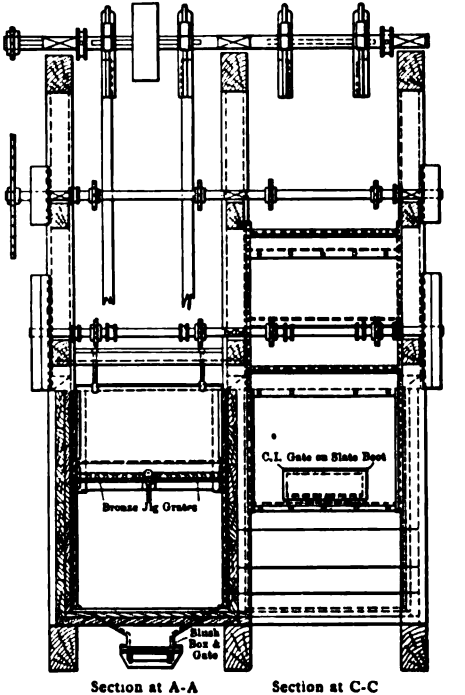

FIG. 335*b*. — SECTIONAL END ELEVATION.

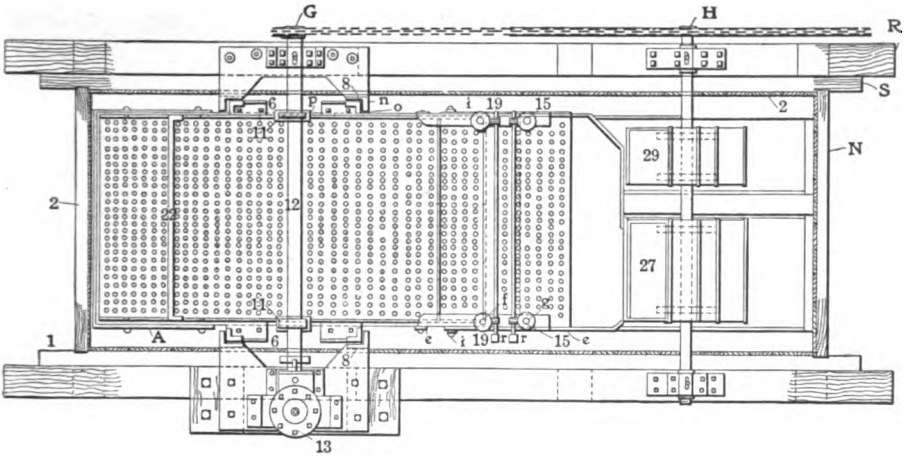

FIG. 336*b*. — PLAN.

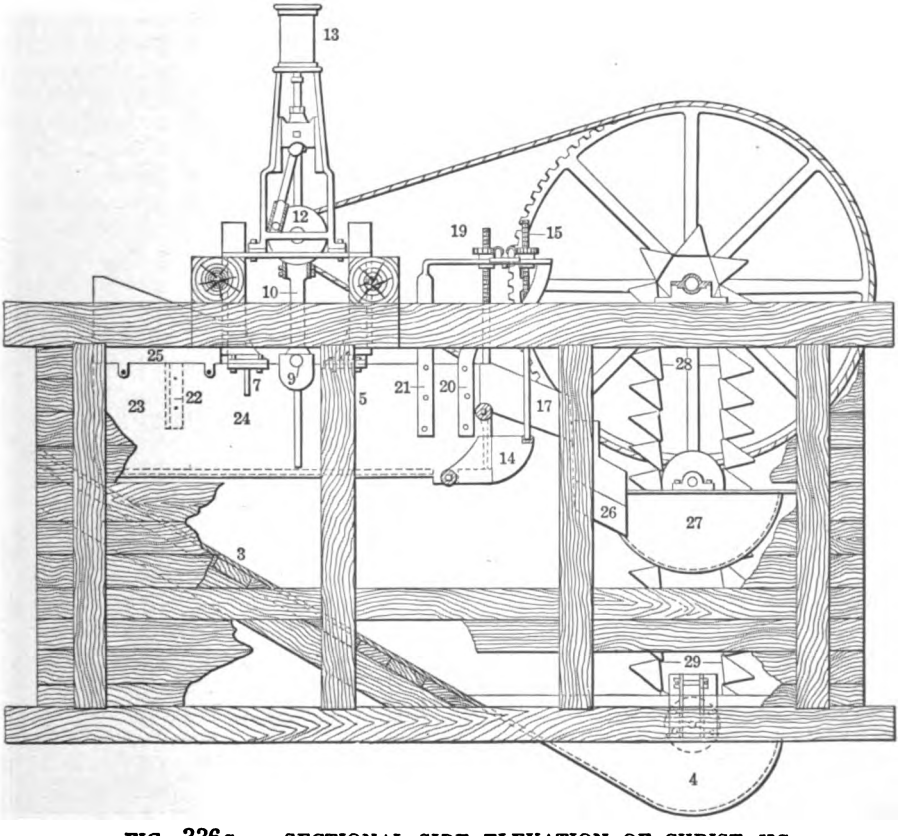

FIG. 336*a*. — SECTIONAL SIDE ELEVATION OF CHRIST JIG.

between the two main chambers (23) and (24). Above the pan (5) and riveted to its sides is the receiving hopper (25).

To operate the machine the wooden tank is filled with water to such a depth that the jig box, when at its highest position, is not entirely covered, but is completely submerged when in its lowest position. The material to be jigged is fed through the hopper (25) into the receiving chamber (23) where the plate (22) prevents it from spreading over the entire surface of the box. The eccentrics (11) give the pan an up-and-down motion that serves to agitate the water in the tank, and the material then passes under the plate (22) into the jigging chamber (24) where it gradually forms two more or less distinct layers — the slate at the bottom and the coal at the top.

At the front the slate which is the heavier material, falls through the gate (14) which can be adjusted by the rods (15) while the machine is in motion. This gate (14) can be adjusted so that no material whatever will pass over it, or by lowering, it can be adjusted so that all the material passing to the front of the jig will escape through it. The height of this gate therefore determines the amount of refuse that shall be taken out. If the gate is high it will take out only the very heaviest of the slate and as it is gradually lowered it will take out lighter and lighter material. The gate is adjusted until the slate or heavy material will pass over it, while the coal or lighter material will remain in the chamber (24) until a sufficient amount of it has collected and the layer therein has risen high enough to pass over the front wall and into the chute (17). The top of this slate gate determines, or rather marks the line of separation between the slate and coal layers. The coal after passing over the chute (17) is taken into a second chute (26) at its front, which leads into an elevator boot (27). The coal elevator (28) conveys the coal from this boot to a chute that leads to the storage pocket. The slate after leaving the slate gate (14) falls on the inclined floor of the tank, and, together with the sludge that passes through the perforations in the gate (14), is taken by the elevator (29) from the boot (4) and dumped into a refuse chute. The elevators (28) and (29) are operated by means of two sprocket wheels, one on the main shaft (12) and the other on the elevator shaft.

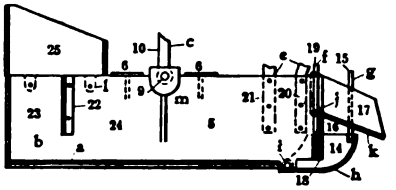

FIG. 336c. — DETAIL OF JIG PAN.

The tank has to be slushed out several times each day in order to take off the dirty water and loosen any dirt that may have accumulated on the floor of the tank. For this purpose a slush gate is provided on the bottom of the slate elevator boot (4).

The proper speed for the jig is 130 to 150 revolutions per minute when the feed is coming to it regularly and the jig is being fed up to its capacity. When there is little or no material being fed the engine should be stopped as there is danger of disturbing the slate bottom if this is not done. A constant flow through a ¾-inch pipe will supply all the water that is needed for the jig, but the makers recommend a 2-inch connection so as to fill the tank more rapidly when empty. The capacity of the jig is from 8 to 10 tons per hour. The manufacturers claim that on bituminous coal the jig has a capacity of from 15 to 20 tons per hour.

Figs. 337*a*, *b*, and *c* show a more recent design of Christ jig that is known as the Christ conveyor jig. This jig has the jigging pan (1) pivoted at (2) to the connecting rods (3) and moved up and down in the jigging tank by means of the eccentrics (4) on the main driving shaft (5). Instead of employing an independent engine as is done in the form previously described, power is applied

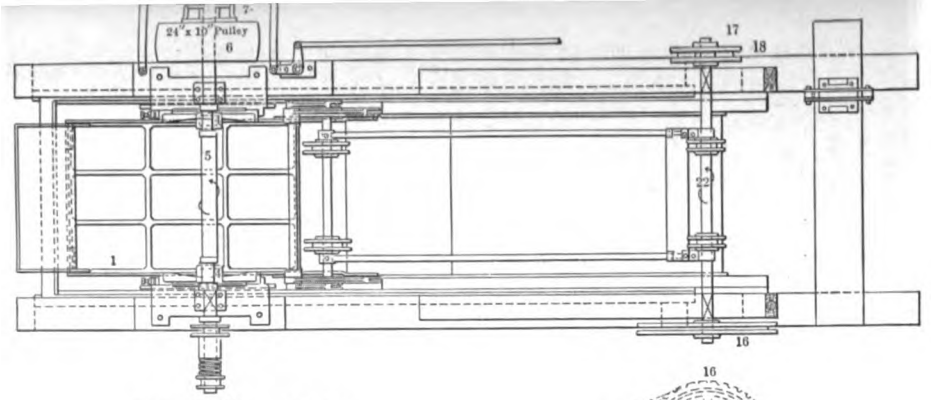

FIG. 337*b*. — PLAN.

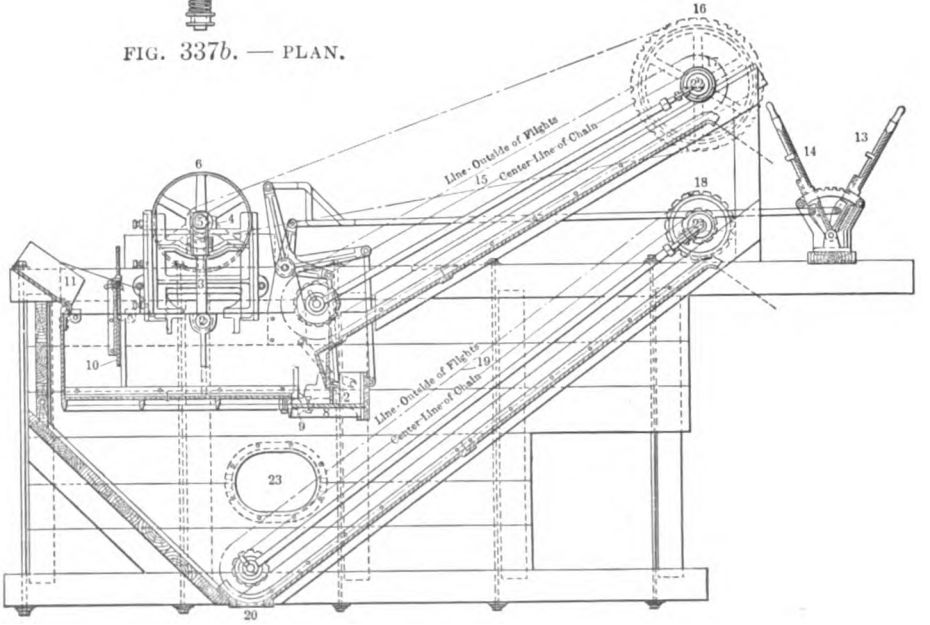

FIG. 337*a*. — SECTIONAL SIDE ELEVATION OF CHRIST CONVEYOR JIG.

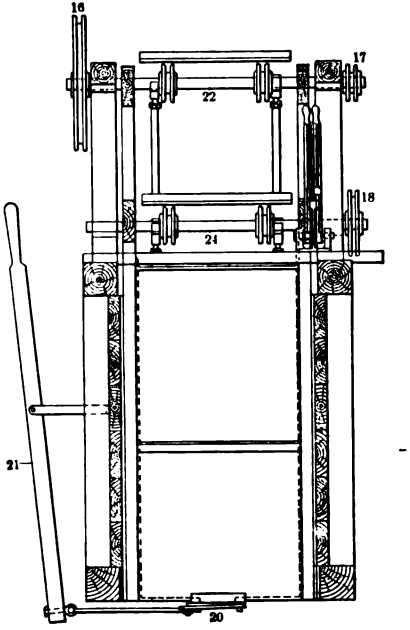

FIG. 337*c*. — SECTIONAL END ELEVATION.

to the jig through the driving pulley (6). The power may be thrown on or off by means of the clutch (7). The jigging pan has a slate gate (8) pivoted at (9). The gate or partition (10), unlike the similar partition in the earlier type of the jig, is adjustable up or down. The slate gate (12) may be adjusted vertically by means of the lever (13), as may the swinging slate gate (8) by means of the lever (14). This gives a very perfect control of the work that is being done by the jigs and places the means for varying the adjustment within easy reach of the operator and close by the point where the products are delivered into the coal and slate chutes respectively.

The operation of the jig is exactly as was described under the description of the earlier form. The coal is delivered to the scraper conveyor (15) which is driven by chain drive from main drive shaft (5) to the sprocket wheel (16) on the conveyor shaft (22).

The slate that has passed the slate gate (8) falls into the jigging box below and is picked up by the scraper conveyor (19) operated by a chain drive from the sprocket wheel (17) on the shaft (22) to the sprocket wheel (18) on the shaft (24). These conveyors deliver the products free from water to the proper chutes. The jigging box is provided with a manhole (23) to permit access when repairs are to be made, and a bottom gate (20) operated by the lever (21) to permit sluicing out the jigging box from time to time. This jig should be capable of quicker and easier adjustment than the earlier forms.

Many other forms of jigs are in use. The New Century jig described in an earlier article is also used to some extent for the jigging of anthracite coal. Tests made on the pulsator jig described in Chapter XI. seem to indicate that this machine may find successful application in the jigging of coal.

CONVEYING THE COAL TO THE TOP OF THE BREAKER.

§ 819. It is not possible in a brief chapter to enter into a minute description of the surface arrangements at a coal mine, all-important as they are, or even to give a detailed description of the construction of breaker buildings, tipples, etc. The method that is adopted for getting the coal to the top of the breaker depends on the position of the breaker with reference to the mine openings. Where the coal coming from the mine is hoisted through a shaft, the cars may be pushed from the mine cage, which hoists them to the top of the breaker, and dumped by an ordinary tipple or dump, or a self-dumping cage may be used and the coal dumped directly from the car on the cage into the dump chute or into a pocket from which it is fed gradually into the dump chute.

The mine law in Pennsylvania now requires that the breaker shall be at least 200 feet from the mine opening. This requirement is made so that in case of fire in the breaker the smoke may not be carried into the mine. In cases of this sort the mine cages are sometimes so arranged as to lift the coal high enough so that it will run by gravity in a chute to the top of the breaker. Various forms of slope hoists, car hauls, aerial trams, apron and bucket conveyors are also used. Where the coal is brought to the top of the conveyor in cars, means must be provided there for dumping the cars and returning the empties. Various forms of tipples or cradles are used to assist in this. Fig. 338 shows a form of rotary tipple that is sometimes used. The operation of this tipple is shown in Figs. 339*a* and *b*. As will be seen in the cuts the tipple consists of a cylindrical shell with tires (12) which run upon rollers (11). The car (1) is pushed into the tipple on the rails (2) which are of the same gauge and at the level at which the cars are pushed into the top of the breaker. Passing around one of the tires of the breaker is a wire rope (8) attached to a steam cylinder (9) above and to a weight (13) below. Below the track on the shaft (4) is a heavy weight (3) that is keyed to the shaft but is free to move a certain distance

revolving the shaft. There is also keyed upon the same shaft a lever (5). When the cylinder is revolved in a counter-clockwise direction, the weight (3) moves

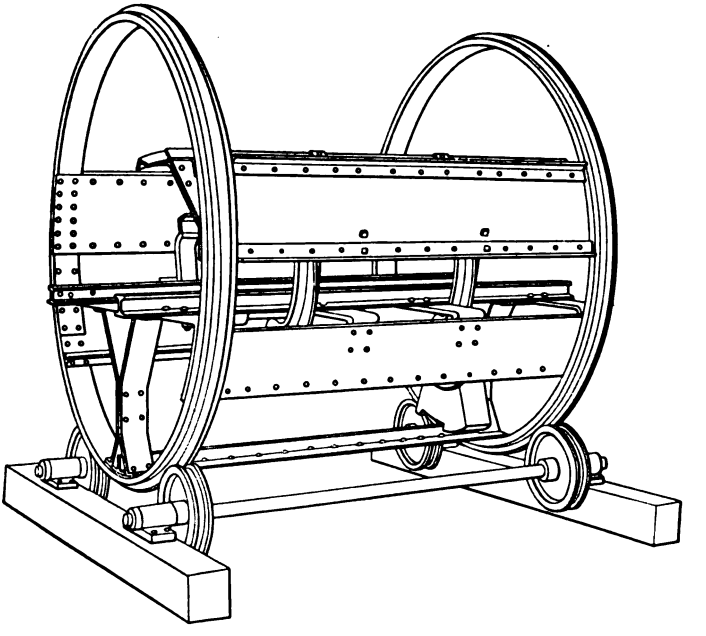

FIG. 338. — REVOLVING TIPPLE.

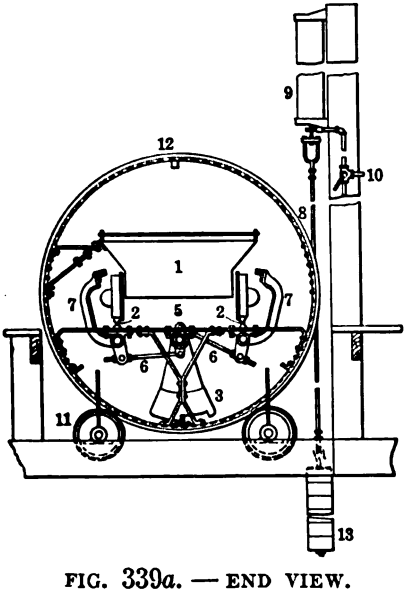

FIG. 339*a*. — END VIEW.

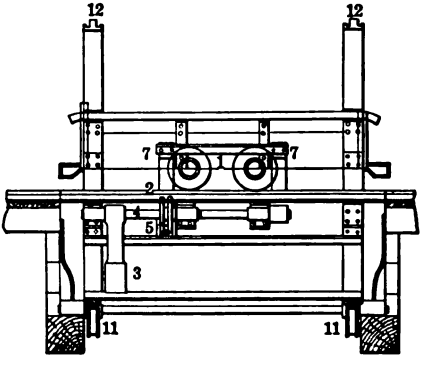

FIG. 339*b*. — SIDE VIEW.

to the left, revolving the shaft (4) to the right. The motion transmitted through the levers (5) and (6) then causes the grips (7) to clasp the wheels of the car and

keep it on the rails as the tipple is revolved. The revolution of the tipple is accomplished by the upward movement of the piston, the weight (13) serving as a balance and assisting in bringing the tipple back to its original position after dumping. After the car has been dumped and the tipple brought back to its original position the grips (7) are released automatically and the empty car is pushed out of the tipple by the incoming full car, and so on.

But one man is required to operate this form of dump. The advantages that are to be gained by its use are a decrease in the trackage and the small number of men that are required on the tipple, the rapidity of dumping, and the fact that a cheaper mine car can be used as no doors are required on the cars, thus saving not only in the first cost of the cars, but in the repairs.

Beside the various forms of cradle dumps that are in use for dumping the mine cars there are a number of very ingenious devices that have been designed with the idea in mind of facilitating the handling of the cars and the return of the empties. These are commonly known as cross-over dumps.

§ 820. PHILLIPS CROSS-OVER DUMP. — The Phillips cross-over dump is shown in Fig. 340. As the loaded car comes upon the dump-rail (2) it is stopped by the horns (1) which bear against the front wheels of the car. The dump-rail is supported at (3) on the trestle in such a way that it is free to tip and allow the contents of the car to discharge through the end doors when the center of gravity is shifted forward by reason of the loaded car being on the rails. This movement is controlled by the brake (4) which operates on the friction bar (5). Were it not for this brake the car and rails would return to their original position before the last of the coal had been discharged. After the last of the coal has been discharged the brake is released and the car returns to its original position on the rails. As the next car comes upon the dump-rail it depresses the lever (6) which in turn straightens out the toggles (7) attached to the horns and causes them to take the dotted position shown in the cut. This action releases the empty car which is then free to run on down the rails (9). These rails are turned up at the end in such a way as to check the momentum of the car and send it back to a switch where the train of empties is made up. As soon as the oncoming loaded car has passed the lever (6) it is released and the horns (1) are pulled back into position for receiving the oncoming loaded car by the action of the coiled spring at (8).

This form of dump requires little attendance and is rapid and sure in its action. It has the advantage of requiring no power other than that of gravity and of having comparatively few moving parts.

§ 821. STEAM TIPPLE DUMP. — Figs. 341*a* and *b* show a steam tipple dump that has found some application. The loaded car coming in on the rails (1) is stopped by the horns (2) which are ordinarily held in position by the coiled springs (10). The steam cylinder (3) is pivoted at (9) at a point a little above its center and so as to be vertically below the rear axle of the loaded car. It is provided with a piston (4) and piston rod (5). At the top of the piston rod (5) is a casting so designed as to clutch the rear axle and lift the car. The admission of steam to the cylinder is controlled by the lever (7). When steam is admitted below the piston and a loaded car is in position for dumping, the piston rises and the car is raised into the position indicated by the dotted lines, allowing the contents to run out through the end door. After the contents of the car have been discharged the exhaust is opened and the car sinks back to its original position. The next loaded car depresses the tread (8), which by a series of levers shown in the cut causes the horns to move to one side, leaving the empty car free to pass on down the track (11).

Figs. 342*a* and *b* show how a system of this sort may be operated. The cars are brought out of the mine by a wire rope car haul as shown. In the

tipple they are dumped over screens which separate the coal into lump and nut sizes which are discharged directly into railroad cars, shown in the cut, and

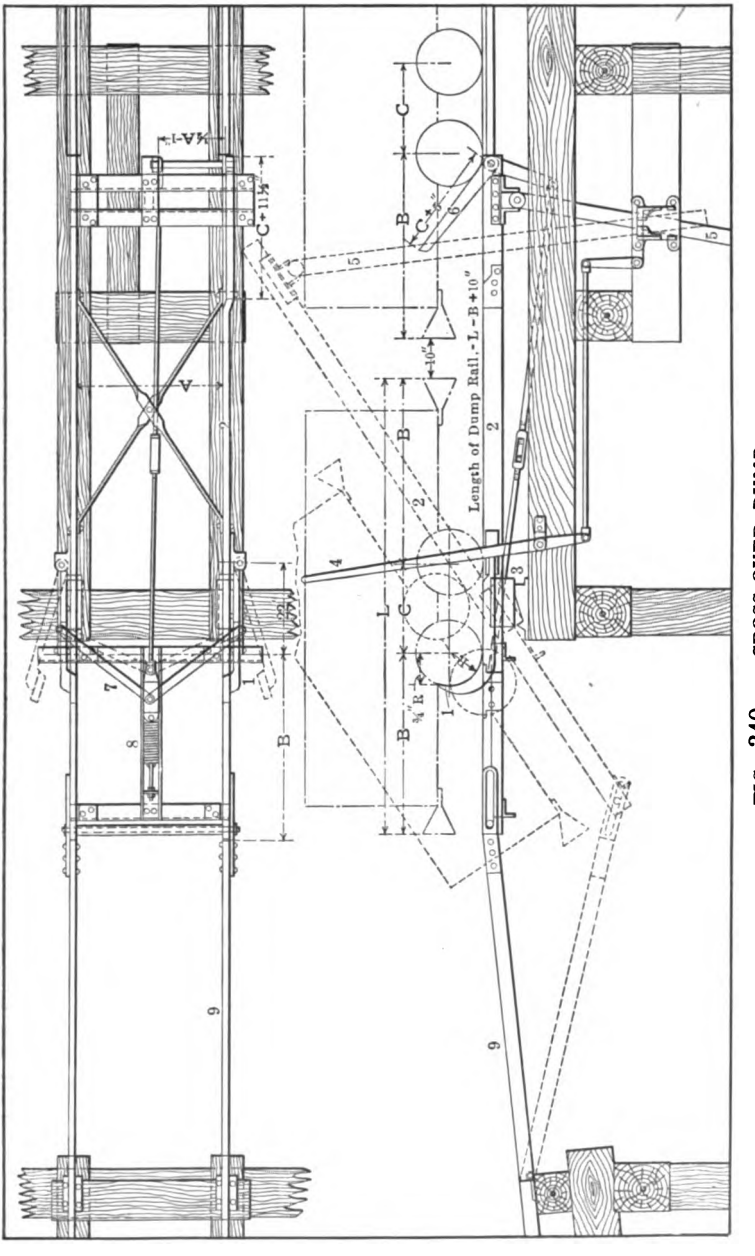

FIG. 340. — CROSS-OVER DUMP.

slack which goes by way of a spiral or screw conveyor to a chain scraper conveyor leading to the washery. The empties are returned as shown in the cut.

CHUTES, CONVEYORS, AND ELEVATORS.

§ 822. CHUTES. — These are troughs in which the coal is conveyed from one level to another. The material in a chute runs downward by gravity. The chutes are constructed of plank and lined with iron or steel, the side linings

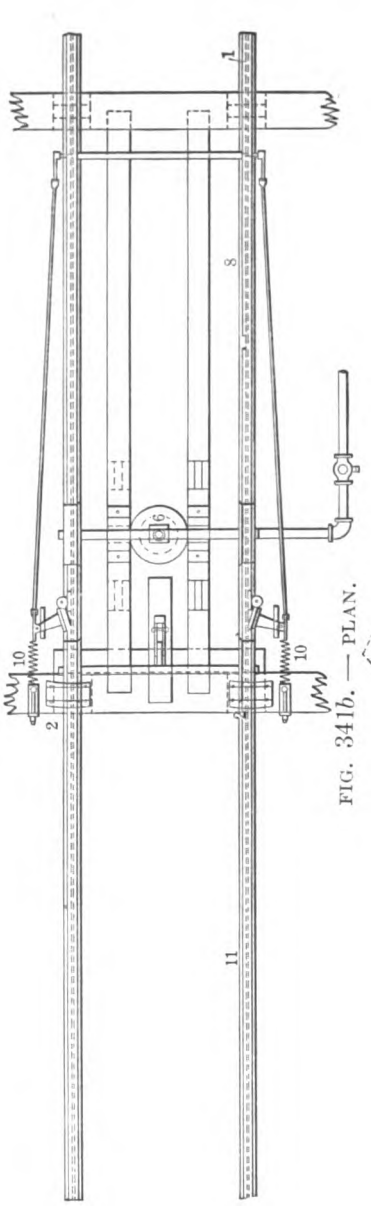

FIG. 341*b*. — PLAN.

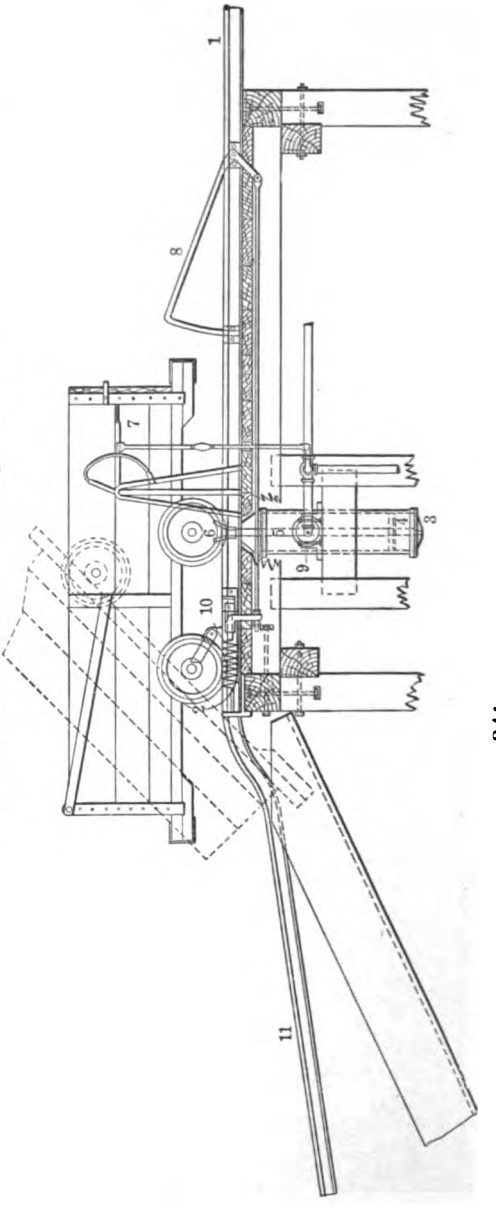

FIG. 341*a*. — STEAM TIPPLE DUMP.

being put on first and the bottom lining fitted between the side linings. This construction is necessary as the bottom plates wear rapidly and must be replaced more frequently than the side plates. Plate glass has been used in a few

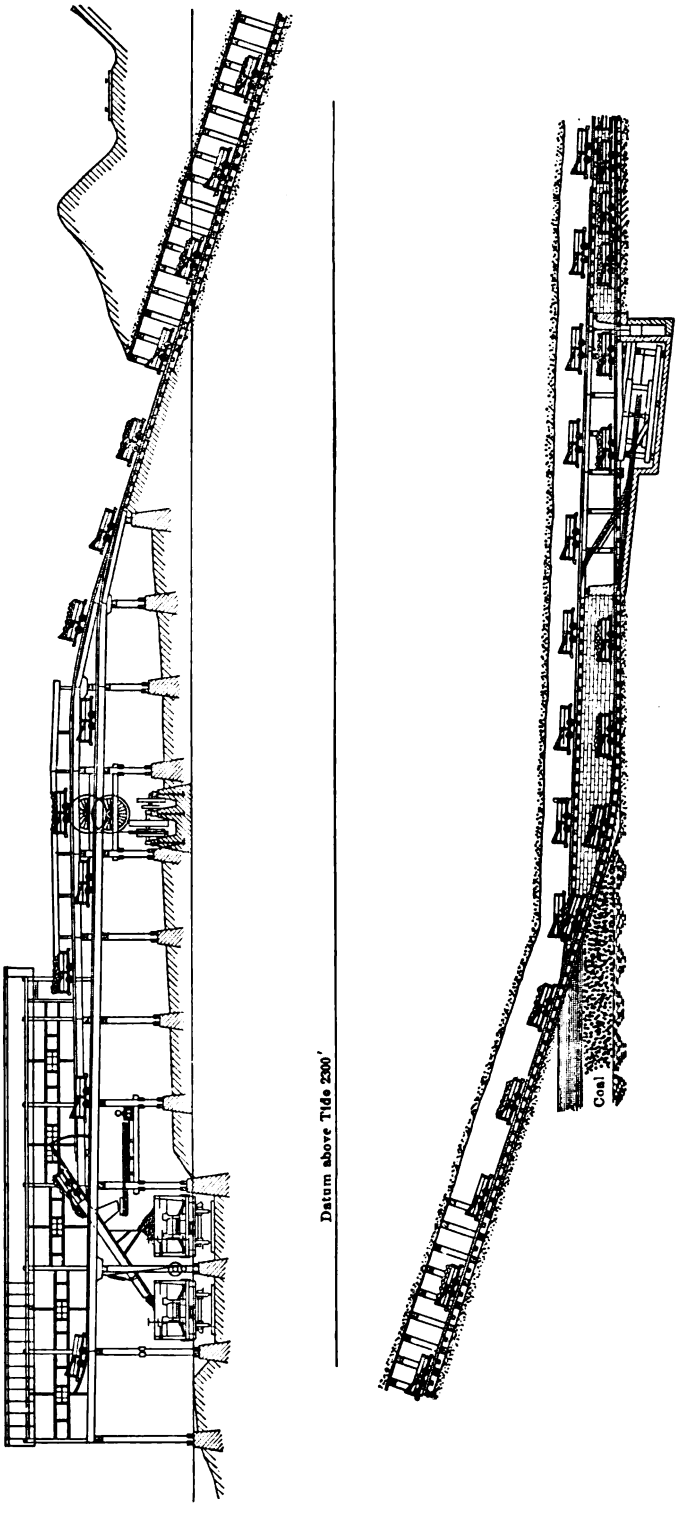

FIG. 342. — WIRE-ROPE HAUL AND TIPPLE.

instances for linings. For fine coal terra cotta tile cut in half longitudinally may be used.

The depth and width of a chute depends upon the size and amount of coal

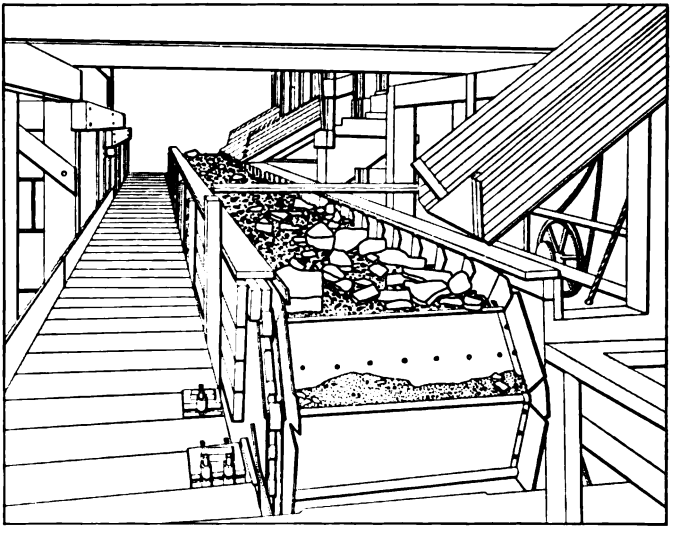

FIG. 343. — ENDLESS APRON CONVEYOR.

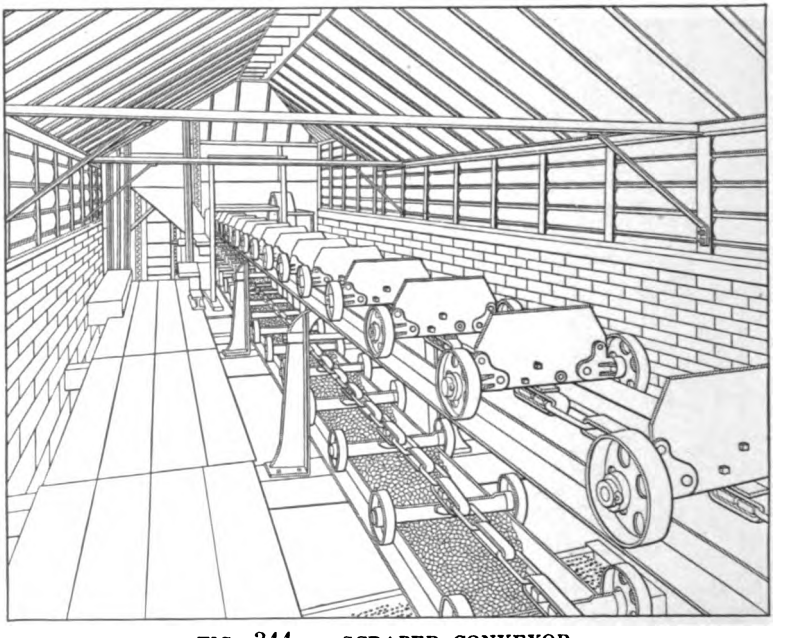

FIG. 344. — SCRAPER CONVEYOR.

that it is intended to handle. The slope depends upon the size and the condition of the material; the smaller, flatter, and drier the material the greater must be the slope of the chute. Chutes with glass linings have the advantage

not only as regards life but also the advantage of requiring from 30 to 50% less slope than is required when chutes are lined with sheet iron or sheet steel. Chutes are sometimes used that have no side boards, but instead have the bottom lining curved up slightly on either side; such chutes are known as telegraphs. Loading lips are chutes for conveying the coal from the pockets in the bottom of the breaker to the railroad cars. They are especially designed to prevent breakage of the coal in loading.

§ 823. CONVEYORS. — Conveyors of various sorts are used in the handling of coal in the breakers. These conveyors resemble the corresponding devices used for the handling of ores. Belt conveyors are not used for handling coal to anything like the extent that they are for the handling of ores. Where the coal is to be hand-picked endless apron conveyors are often used similar to the one shown in Fig. 343. These conveyors consist of a number of sheet-iron or steel aprons attached to a link belt on either side and in such a way as to form a continuous surface. These link belts run over suitably designed sprocket wheels at either end, by which they are guided. The power for driving the conveyor is applied in much the same way as in the case of the continuous belt conveyor. These conveyors are also used for conveying the run of mine coal from the mine to the tipple, either up or down grade as the case may be. Where the slope is to great too permit of the use of conveyors of this sort, some of the various forms of scraper conveyors are sometimes used. Where the coal is to be conveyed down a slope, as from a drift to the tipple below, these conveyors are known as retarding conveyors. Fig. 344 shows a form of flight or scraper conveyor that is in quite general use. In this form of conveyor the coal is conveyed through a trough by means of scrapers or flights, fastened to one or more link belts and guided on either side by rollers as is shown in the cut. At each end of the trough are sprocket wheels over which the link belt or chain is run. The conveyors are fitted with a take-up device at one end by which the sprocket wheel may be moved in or out, and the chain then loosened or any slack taken up. At the driving or head end of the conveyor a driving wheel is keyed to the same shaft as the sprocket wheel and driven either by a belt, a wire or hemp rope, by link belting, or by a pinion placed on the sprocket wheel shaft and the shaft driven by a spur gear. The link belt used with sprocket wheels furnishes a very positive drive as there can be no slipping; hence, link belting is particularly adapted to slowly moving conveyors. Where the coal is to be conveyed for long distances, 1,000 feet or more, some of the various forms of trough conveyors are used. (See Figs. 345 and 346.) These con-

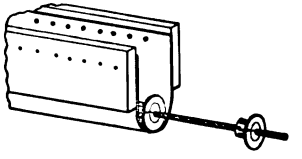

FIG. 345. — TROUGH CONVEYOR.

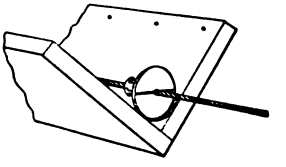

FIG. 346. — TROUGH CONVEYOR.

veyors are equally desirable for short distances. The flights are usually circular and are attached either to a wire rope as shown in the cuts or to a monobar chain. Figs. 347 and 348 show a conveyor of this sort with flights and a sheave such as is used at each end of the conveyor.

Where coal is being recovered from culm banks conveyors are used to convey the culm from the bank to the washery. Fig. 349 shows how this operation

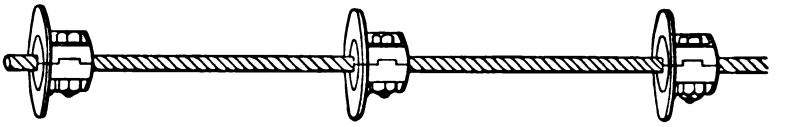

FIG. 347. — WIRE ROPE AND FLIGHTS.

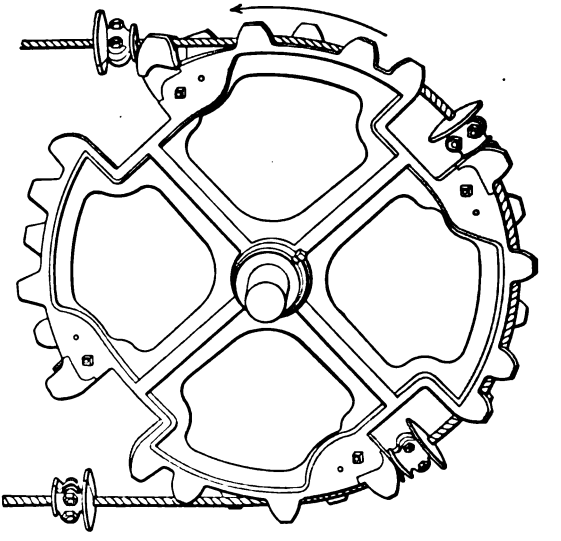

FIG. 348. — SPROCKET.

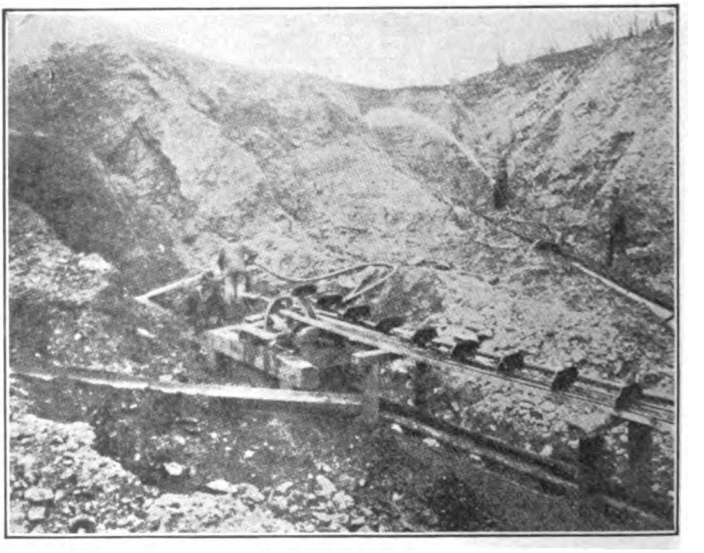

FIG. 349. — METHOD OF REMOVING COAL FROM CULM BANKS FOR WASHING.

is carried out. The material is loosened by jets of water and sluiced into the conveyors, which are of the scraper type. These conveyors are usually made so that they may be swung over a considerable arc. Fig. 350 shows the form of chain that is most used, with the flights attached, and Fig. 351 shows the driving arrangement. This conveyor may not only be swung so as to reach any part of the bank, but additional links and flights may be readily

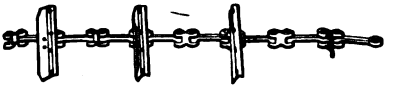

FIG. 350. — CHAIN FOR SWINGING CONVEYOR.

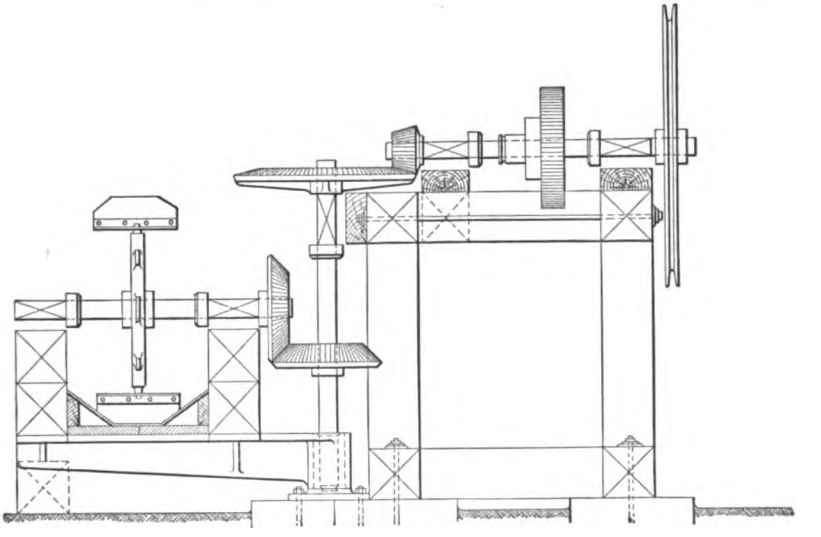

FIG. 351. — DRIVING ARRANGEMENT FOR SWINGING CONVEYOR.

inserted and the conveyor lengthened. In this way the entire bank can be reached without any alterations whatever in the head-gear. Spiral conveyors similar to the one shown in Fig. 352 are used for conveying fine material. These have been discussed in Chapter XV. of this volume. The determination of the power required to drive conveyors varies so much with the design that no general rules can be given. The manufacturers of conveyors all give figures for the power required for the conveyors manufactured by them, and for this data the catalogues must be consulted.

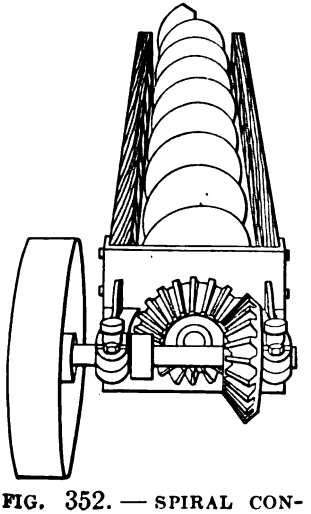

FIG. 352. — SPIRAL CONVEYOR.

§ 824. ELEVATORS. — Elevators are used in the breakers for raising coal or refuse. The elevator shown in Fig. 353*a* is still used in the anthracite region to some extent and is known as the link and spindle elevator. This elevator is used where material is to be elevated to a considerable height. Fig. 353*b* shows a front elevation of the elevator. The links (1) composing the buckets are built of 2 × ⅝-inch strap iron, bent to the proper shape and welded. Each link is provided with two holes for the rivets,

by which the buckets are attached. The spindles (2) to which the links are attached are made of wrought iron and the links are arranged on the spindles as shown in Fig. 353*b*. The spindles are longer than the buckets and run in the guides (3) in the head and foot pulleys. The buckets (4) are riveted to the links with an interposing wedge of oak so tapered as to make the bottom of one bucket stand out from the top of the bucket below it, for if the buckets were bolted directly to the link belt, the belt would be so rigid that it could not pass over the top and under the lower pulleys. The overlap of the buckets also assists in the discharge. Each bucket discharging its contents upon the face of the preceding bucket and the coal thus sliding ahead and out of the way.

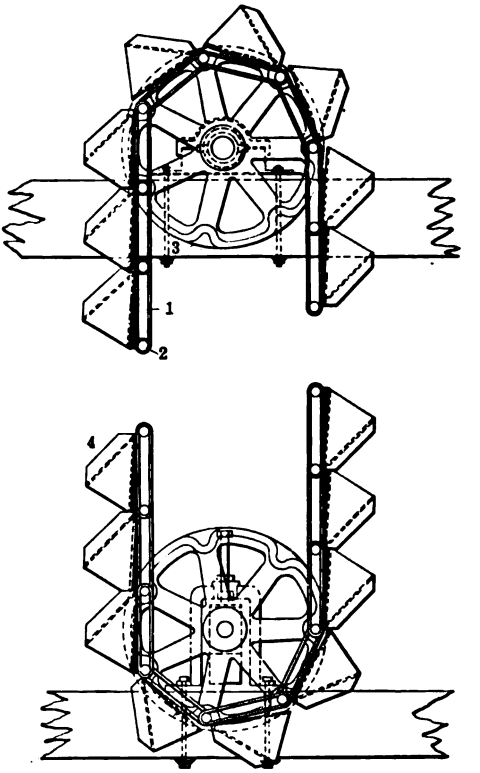

FIG. 353*a*. — SIDE ELEVATION OF LINK AND SPINDLE ELEVATOR.

The method of driving is shown in Fig. 353*b*. The top or driving shaft is always made larger than the bottom shaft as it has the load to carry. The lower bearings are made adjustable so as to take up any slack in the belt. The buckets are usually constructed of sheet iron in two parts riveted together at the sides.

§ 825. *Single-Strand Elevator.* — This elevator (see Figs. 354*a* and *b*) consists of a string of buckets supported by a single strand of chain passing over sprocket wheels at top and bottom. The general practice is to run elevators of this type at a chain speed of about 100 feet per minute. Elevators supported by two chains instead of one are known as double-chain elevators. The single chain is used for light work and the double chain for heavier loads.

§ 826. Capacity of Elevators. — The capacity of elevators in tons per hour may be determined approximately when the size and distance apart of the buckets is known and also the speed of the elevator. The capacity when handling coal is given by the following formula, $T = \frac{0.000475\ Slw^2}{d}$ where T is the capacity in tons of 2,000 pounds of coal per hour, S is the speed of the elevator in feet per minute, l is the length or longer dimension of the bucket, w is the width or shorter dimension both in inches, and d is the distance the buckets are apart in feet. This applies to malleable iron buckets only.

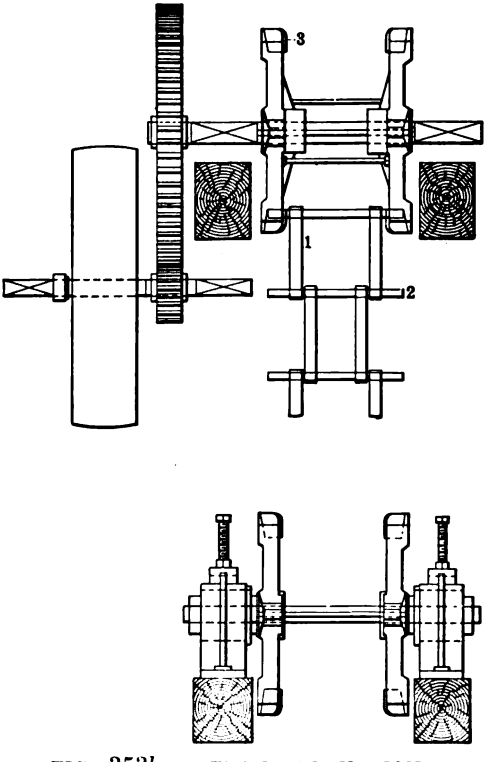

FIG. 353*b*. — FRONT ELEVATION.

Suppose that we wish to find the approximate capacity of an elevator with malleable-iron buckets spaced 12 inches apart, 6 × 10 inches in size, and with the elevator running at a speed of 100 feet per minute. Applying the formula we get

$$T = 0.000475 \times 100 \times 10 \times 36 = 17.1 \text{ tons per hour.}$$

§ 827. Horse-Power for Bucket Elevators. — The Link Belt Company gives the following formula for the power required by bucket elevators: $H.P. = \frac{NHw}{d}$, in which N is a number taken from Table 149, H is the height of the elevator in feet, w the weight of the material contained in one bucket, and d the distance apart of the buckets in inches.

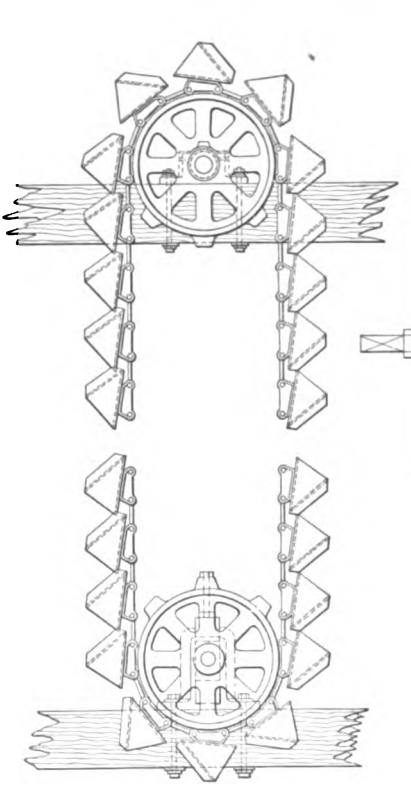

FIG. 354*a*. — SIDE ELEVATION OF SINGLE STRAND ELEVATOR.

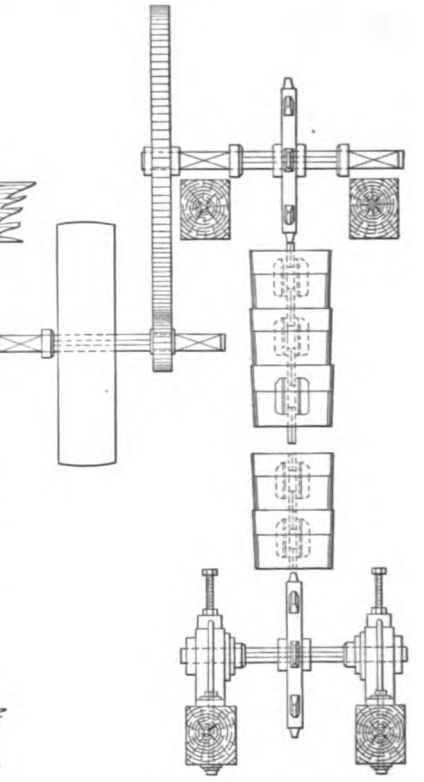

FIG. 354*b*. — FRONT ELEVATION.

TABLE 149. — FACTORS FOR COMPUTING POWER REQUIRED BY ELEVATORS.

Revolutions per Minute.	Diameter of Head Wheels, in Inches.					
	22	24	26	28	30	32
10	0.064	0.070	0.075	0.080	0.087	0.093
12	0.077	0.083	0.090	0.097	0.104	0.111
14	0.089	0.096	0.106	0.114	0.121	0.130
16	0.102	0.111	0.121	0.130	0.140	0.148
18	0.115	0.125	0.136	0.146	0.157	0.167
20	0.128	0.139	0.151	0.162	0.174	0.186
22	0.140	0.153	0.166	0.179	0.191	0.204
24	0.153	0.167	0.181	0.195	0.209	0.223
26	0.166	0.181	0.196	0.211	0.226	0.242
28	0.179	0.195	0.211	0.227	0.244	0.260
30	0.191	0.209	0.226	0.244	0.261	0.279
32	0.204	0.223	0.241	0.260	0.278	0.297
34	0.217	0.237	0.256	0.276	0.296	0.316
36	0.230	0.251	0.271	0.292	0.313	0.334
38	0.242	0.265	0.287	0.309	0.331	0.353
40	0.255	0.279	0.302	0.325	0.348	0.372

Suppose that we desire to find the horse-power required by an elevator having buckets of such a size as to contain 5 pounds of coal each and spaced 12 inches apart, the elevator raising the coal to a height of 75 feet above the boot; the head wheels or pulleys being 24 inches in diameter and making 16 revolutions per minute. From Table 149 we find the required factor to be 0.111, H equals 75 feet, w equals 5 pounds, and d equals 24 inches.

$$H.P. = 0.111 \times \frac{75 \times 5}{24} = 1.73\ H.P.$$

APPENDIX.

TABLES AND OTHER USEFUL INFORMATION.

Equivalents of Weights and Measures.*

Length.

1 mile = 5,280 feet, = 1609.31 meters.
1 foot = 12 inches, = 0.30479 meter.
1 inch = 25.3995 millimeters.
1 kilometer = 1000 meters, = 0.62138 mile.
1 meter = 100 centimeters, = 3.280899 feet, = 39.370790 inches.
1 centimeter = 10 millimeters, = 0.393708 inch.
1 millimeter = 0.039371 inch.

Surface.

1 square yard = 9 square feet, = 0.83610 square meter.
1 square foot = 144 square inches, = 9.2900 square decimeters, = 929.00 square centimeters.
1 square inch = 6.4514 square centimeters.
1 square meter = 100 square decimeters, = 10.764 square feet.
1 square decimeter = 100 square centimeters, = 0.10764 square foot, = 15.501 square inches.
1 square centimeter = 100 square millimeters, = 0.15501 square inch.
1 square millimeter = 0.001550 square inch.

Volume.

1 cubic yard = 27 cubic feet, = 0.76451 cubic meter, = 201.97 gallons.
1 cubic foot = 1728 cubic inches, = 0.028315 cubic meter, = 7.4805 gallons, = 28.3153 liters, = 29.922 quarts.
1 cubic inch = 0.017316 quart, = 16.386 cubic centimeters.
1 gallon = 4 quarts, = 0.13368 cubic foot, = 231.0000 cubic inches, = 3.7852 liters.
1 quart = 2 pints, = 57.75 0 cubic inches, = 0.94630 liter, = 946.30 cubic centimeters.
1 cubic meter = 1000 liters, = 1.3080 cubic yards, = 35.317 cubic feet, = 264.19 gallons.
1 liter or 1 cubic decimeter = 1000 cubic centimeters, = 0.035317 cubic foot, = 61.027 cubic inches, = 0.26419 gallon, = 1.0567 quarts.
1 cubic centimeter = 0.061027 cubic inch

Weight.

1 ton = 2000 pounds avdp., = 907.19 kilos. This is the ton used throughout this book unless otherwise specified.
1 long ton = 2240 pounds avdp., = 1016.05 kilos.
1 pound avoirdupois = 16 ounces avdp., = 0.45359 kilo, = 7000 grains, = 1.2153 pounds troy.
1 pound troy = 5760 grains, = 0.82286 pound avdp., = 12 ounces troy, = 0.37324 kilo.
1 ounce avoirdupois = 437.50 grains, = 28.3495 grams, = 0.91146 ounce troy.
1 ounce troy = 480 grains, = 20 pennyweights, = 31.1035 grams. = 1.0971 ounces avdp. The troy ounce and pound are used only for gold and silver and other precious metals.
1 grain = 64.799 milligrams.
1 metric ton = 1000 kilos, = 2204.62 pounds avdp., = 1.1023 tons, = 0.98421 long tons.
1 kilo or kilogram = 1000 grams, = 2.2046 pounds avdp.
1 gram = 0.035274 ounce avdp., = 0.032151 ounce troy, = 15.43235 grains, = 1000 milligrams.
1 milligram = 0.015432 grain.

Water.

Note. — These figures are all for water at its maximum density, that is, at a temperature of 39.2° Fahrenheit.
1 cubic foot of water = 62.425 pounds, = 28.3153 kilos.
1 cubic inch of water = 0.036125 pound, = 252.88 grains, = 16.386 grams.
1 ton of water = 32.038 cubic feet, = 239.665 gallons.
1 pound of water = 0.016019 cubic foot, = 0.47933 quart, = 27.681 cubic inches = 0.45359 liter.
1 gallon of water = 8.3448 pounds.
1 cubic meter of water = 2204.6 pounds.
1 kilo of water or 1 liter = 2.2046 pounds, = 0.03517 cubic foot, = 61.027 cubic inches, = 1.0567 quarts.
1 cubic centimeter of water = 1 gram, = 15.432 grains.

Sea water averages 1.028 times as heavy as pure water and it contains about 3.44 % of solids (of which 2.5 % is sodium chloride).

The water of Great Salt Lake, Utah, is 1.170 times as heavy as pure water and contains 22.42 % of solids.

Dead Sea water is 1.172 times as heavy as pure water.

* Taken from C. Hering. Table of Equivalents of Units of Measurement.

Power

1 horse-power = 33000 foot pounds per minute, = 4562.33 kilogram-meters per minute, = 0.745941 kilowatt, = 1.01385 metric horse-power.
1 metric horse-power = 32549.0 foot pounds per minute, = 4500 kilogram-meters per minute = 0.735750 kilowatt, = 0.98634 horse-power.

Pressure

1 atmosphere = 760 millimeter, or 29.922 inches of mercury column, = 10.333 meters or 33.901 feet of water column, = 14.696 pounds per square inch, = 1.0333 kilos per square centimeter.
1 pound per square inch, = 0.070310 kilo per square centimeter.
1 kilo per square centimeter = 14.223 pounds per square inch.

TABLE 150. — ATOMIC WEIGHTS.*

Aluminum	Al	27.1	Neodymium	Ne	143.6
Antimony	Sb	120.2	Neon		20
Argon	A	39.9	Nickel	Ni	58.7
Arsenic	As	75.0	Nitrogen	N	14.04
Barium	Ba	137.4	Osimium	Os	191
Bismuth	Bi	208.5	Oxygen	O	16.00
Boron	B	11	Palladium	Pd	106.5
Bromine	Br	79.96	Phosphorus	P	31.0
Cadmium	Cd	112.4	Platinum	Pt	194.8
Cæsium	Cs	133	Potassium	K	39.15
Calcium	Ca	40.1	Praseodymium	Pr	140.5
Carbon	C	12.00	Radium	Ra	225
Cerium	Ce	140	Rhodium	Rh	103.0
Chlorine	Cl	35.45	Rubidium	Rb	85.4
Chromium	Cr	52.1	Ruthenium	Ru	101.7
Cobalt	Co	59.0	Samarium	Sm	150
Columbium (Niobium)	Cb	94	Scandium	Sc	44.1
Copper	Cu	63.6	Selenium	Se	79.2
Erbium	E	166	Silicon	Si	28.4
Fluorine	F	19.	Silver	Ag	107.93
Gladolinium	Gd	156	Sodium	Na	23.05
Gallium	Ga	70	Strontium	Sr	87.6
Germanium	Ge	72.5	Sulphur	S	32.06
Glucinum (Beryllium)	Gl	9.1	Tantalum	Ta	183
Gold	Au	197.2	Tellurium	Te	127.6
Helium	He	4	Terbium	Tb	160
Hydrogen	H	1.008	Thallium	Tl	204.1
Indium	In	114	Thorium	Th	232.5
Iodine	I	126.85	Thulium	Tm	171
Iridium	Ir	193.0	Tin	Sn	119.0
Iron	Fe	55.9	Titanium	Ti	48.1
Krypton	K	81.8	Tungsten	W	184.0
Lanthanum	La	138.9	Uranium	U	238.5
Lead	Pb	206.9	Vanadium	V	51.2
Lithium	Li	7.03	Xenon	X	128
Magnesium	Mg	24.36	Ytterbium	Yb	173.0
Manganese	Mn	55.0	Yttrium	Yt	89.0
Mercury	Hg	200.0	Zinc	Zn	65.4
Molybdenum	Mo	96.0	Zirconium	Zr	90.6

* Based on Oxygen as 16.00. From the report of the International Committee for 1902.

TABLE 151. — SPECIFIC GRAVITIES OF MINERALS AND COMMON METALS.*

	Specific gravity.		Specific gravity.
Aikinite, $3(Pb,Cu_2)S.Bi_2S_3$	6.1 — 6.8	Aragonite, $CaCO_3$	2.93 — 2.95
Albertite	1.097	Argentite, Ag_2S	7.20 — 7.36
Albite, $NaAlSi_3O_8$	2.62 — 2.65	Arsenic, As	5.73
Aluminum, Al	2.60	Arsenolite, As_2O_3	3.70 — 3.72
Amalgam, Ag_2Hg_3	13.75 — 14.1	Arsenopyrite, FeAsS	5.9 — 6.2
II III		Asphaltum	1.0 — 1.8
Amphibole, $RRSiO_3$	2.9 — 3.4	Atacamite, $CuCl_2.3Cu(OH)_2$	3.75 — 3.77
Analcite, $NaAlSi_2O_6+H_2O$	2.22 — 2.29	Axinite, $HR_3BAl(SiO_4)_4$	3.271
Andalusite, Al_2SiO_5	3.16 — 3.20	Azurite, $Cu(OH)_2(CO_3)_2$	3.77 — 3.83
Andesine, $nNaAlSi_3O_8$. $mCaAl_2Si_2O_8$	2.68 — 2.69	Barite, $BaSO_4$	4.3 — 4.6
Anglesite, $PbSO_4$	6.12 — 6.39	Barnhardtite, $Cu_4Fe_2S_5$?	4.52
Anhydrite, $CaSO_4$	2.899 — 2.985	Bauxite, $Al_2O_32H_2O$	2.55
Ankerite $CaCO_3(Mg,Fe,Mm)CO$	2.95 — 3.1	Berthierite, $FeSb_2S_4$	4.0 — 4.3
Anorthite, $CaAl_2Si_2O_8$	2.74 — 2.76	Beryl, $Be_3Al_2Si_6O_{18}$	2.63 — 2.80
Anthracite	1.32 — 1.7	Biotite, From $(H,K)_2(Mg,Fe)_4(Al,Fe)_2Si_4O_{16}$ to $(H,K)_2(Mg,Fe)_2Al_2Si_3O_{12}$	2.7 — 3.1
Antimony, Sb	6.71	Bismuth, Bi	9.8
Apatite, $3Ca_3P_2O_8+CaF_2.CaCl_2$	3.17 — 3.23	Bismuthinite, Bi_2S_3	6.4 — 6.5
Apophyllite, $H_7KCa_4(SiO_3)_8+4\frac{1}{2}H_2O$	2.3 — 2.4	Bituminous Coal	1.14 — 1.4

* The minerals are taken from E. S. Dana, System of Mineralogy, and the metals from Landolt und Bornstein Physikalische Chemische Tabellen.

	Specific gravity.
Bornite, Cu_3FeS_3	4.9 — 5.4
Bournonite, $3(Cu_2,Pb)S.Sb_2S_3$	5.7 — 5.9
Bromyrite, AgBr	5.8 — 6.0
Brookite, TiO_2	3.87 — 4.01
Brown Coal	1.15 — 1.3
Brucite, $Mg(OH)_2$	2.38 — 2.40
Cadmium, Cd	8.60
Calamine, $H_2Zn_2SiO_5$	3.40 — 3.50
Calcite, $CaCO_3$	2.713
Cassiterite, SnO_2	6.8 — 7.1
Cast Iron	7.03 — 7.73
Celestite, $SrSO_4$	3.95 — 3.97
Cerargyrite, AgCl	5.55
Cerussite, $PbCO_3$	6.46 — 6.574
Chabazite, $(Na_2,Ca)Al_2Si_4O_{12}+6H_2O$	2.08 — 2.16
Chalcocite, Cu_2S	5.5 — 5.8
Chalcopyrite, $CuFeS_2$	4.1 — 4.3
Chondrodite, $H_2(Mg,Fe)_5Si_5(O,F)_{12}$	3.1 — 3.2
Chromite, $FeCr_2O_4$	4.32 — 4.57
Chromium, Cr	6.50
Chrysoberyl, $BeAl_2O_4$	3.5 — 3.84
Chrysocolla, $CuSiO_3+2H_2O$	2.0 — 2.238
Chrysolite, $(Mg,Fe)_2SiO_4$	3.27 — 3.37
Cinnabar, HgS	8.0 — 8.2
Clinochlore, $H_8Mg_5Al_2Si_3O_{18}$	2.65 — 2.78
Cobalt, Co	8.6
Cobaltite, CoAsS	6.0 — 6.3
Columbite, $(Fe,Mn)(Nb,Ta)_2O_6$	5.3 — 7.3
Copper, Cu, Native	8.8 — 8.9
Copper, Cu, Pure	8.92
Corundum, Al_2O_3	3.95 — 4.10
Crocoite, $PbCrO_4$	5.9 — 6.1
Cryolite, Na_3AlF_6	2.95 — 3.0
Cuprite, Cu_2O	5.85 — 6.15
Cyanite, Al_2SiO_5	3.56 — 3.67
Datolite, $HCaBSiO_5$	2.9 — 3.0
Diamond, C	3.516 — 3.525
Diaspore, $Al_2O_3.H_2O$	3.3 — 3.5
Dolomite, $(Ca,Mg)CO_3$	2.8 — 2.9
Domeykite, Cu_3As	7.2 — 7.75
Electrum, $mAu.nAg$	15.6 — 19.3
Enargite, Cu_3AsS_4	4.43 — 4.45
Epidote, $HCa_2(Al,Fe)_3Si_3O_{13}$	3.25 — 3.5
Erythrite, $Co_3As_2O_8+8H_2O$	2.948
Fluorite, CaF_2	3.01 — 3.25
Franklinite, $(Fe,Zn,Mn)O.(Fe,Mn)_2O_3$	5.07 — 5.22
Gahnite, $ZnAl_2O_4$	4.0 — 4.6
Galena, PbS	7.4 — 7.6
II III	
Garnet, $R_3R_2(SiO_4)_3$	3.15 — 4.3
Gersdorffite, NiAsS	5.6 — 6.2
Gibbsite, $Al(OH)_3$	2.3 — 2.4
Gmelinite, $(Na_2,Ca)Al_2Si_4O_{12}+6H_2O$	2.04 — 2.17
Gold, Au, Native	15.6 — 19.3
Gold, Au, Pure	19.32
Göthite, $Fe_2O_3.H_2O$	4.0 — 4.4
Graphite, C	2.09 — 2.23
Gypsum, $CaSO_4+2H_2O$	2.314 — 2.328
Harmotome, $H_2(K_2,Ba)Al_2Si_5O_{15}+4H_2O$	2.44 — 2.50
Hematite, Fe_2O_3	4.9 — 5.3
Hessite, Ag_2Te	8.31 — 8.45
Ice, H_2O	.09167
Ilmenite, $mFeTiO_3.nFe_2O_3$	4.5 — 5.0
Iodyrite, AgI	5.6 — 5.7
Iridium, Ir	22.42
Iridosmine, $mIr.nOs$	19.3 — 21.12
Iron, Fe, Pure	7.86
Kaolinite, $2H_2O.Al_2O_3.2SiO_2$	2.6 — 2.63
Labradorite, $nNaAlSi_3O_8.mCaAl_2Si_2O_8$	2.70 — 2.72
Laumontite, $H_4CaAl_2Si_4O_{14}+2H_2O$	2.25 — 2.36
Lead, Pb	11.37
Lepidolite, $KLi[Al,(OH,F)_2]Al(SiO_3)_3$	2.8 — 2.9
Limonite, $2Fe_2O_3.3H_2O$	3.6 — 4.0
Linnaeite, Co_2S_4	4.8 — 5.0
Magnesite, $MgCO_3$	3.0 — 3.12
Magnetite, $FeO.Fe_2O_3$	5.168 — 5.180
Malachite, $Cu_2(OH)_2CO_3$	3.9 — 4.03
Manganese, Mn	7.39
Manganite, $Mn_2O_3.H_2O$	4.20 — 4.40

	Specific gravity.
Marcasite, FeS_2	4.85 — 4.90
Mercury, Hg	13.596
Miargyrite, $AgSbS_2$	5.1 — 5.3
Millerite, NiS	5.3 — 5.65
Mimetite, $3Pb_3As_2O_8.PbCl_2$	7.0 — 7.25
Molybdenite, MoS_2	4.7 — 4.8
Muscovite, $H_2KAl_3(SiO_4)_3$	2.76 — 3.0
Naphtha	0.60 — 0.756
Niccolite, NiAs	7.33 — 7.67
Nickel, Ni	8.9
Oligoclase, $nNaAlSi_3O_8.mCaAl_2Si_2O_8$	2.65 — 2.67
Opal, $SiO_2.nH_2O$	1.9 — 2.3
Orpiment, As_2S_3	3.4 — 3.5
Orthoclase, $KAlSi_3O_8$	2.467 — 2.619
Ozocerite	0.85 — 0.90
Palladium, Pd	11.3 — 11.8
Phlogopite, $(H,K,MgF)_3Mg_3Al(SiO_4)_3$	2.78 — 2.85
Pinite, Hydrous Alkaline Silicate from alteration	2.6 — 2.85
Platiniridium, $mPt.nIr$	22.65 — 22.84
Platinum, Pt, Native	14.0 — 19.0
Platinum, Pt, Pure	21.50
Polybasite, Ag_9SbS_6	6.0 — 6.2
Prehnite, $H_2Ca_2Al_2Si_3O_{12}$	2.80 — 2.95
Proustite, Ag_3AsS_3	5.57 — 5.64
Psilomelane, H_4MnO_5	3.7 — 4.7
Pyrargyrite, Ag_3SbS_3	5.77 — 5.86
Pyrite, FeS_2	4.95 — 5.10
Pyrolusite, MnO_2	4.82
Pyromorphite, $3Pb_3P_2O_8.PbCl_2$	6.5 — 7.1
Pyroxene, $RSiO_3$	3.2 — 3.6
Pyrrhotite, $Fe_{11}S_{12}$	4.58 — 4.64
Quartz, SiO_2	2.653 — 2.660
Realgar, AsS	3.556
Rhodochrosite, $MnCO_3$	3.45 — 3.60
Rhodonite, $MnSiO_3$	3.4 — 3.68
Rutile, TiO_2	4.18 — 4.25
Scheelite, $CaWO_4$	5.9 — 6.1
Serpentine, $H_4Mg_3Si_2O_9$	2.50 — 2.65
Siderite, $FeCO_3$	3.83 — 3.88
Silver, Ag, Native	10.1 — 11.1
Silver, Ag, Pure	10.53
Smaltite, $CoAs_2$	6.4 — 6.6
Smithsonite, $ZnCO_3$	4.30 — 4.45
Sphalerite, (Blende) ZnS	3.9 — 4.1
Spinel, $MgAl_2O_4$	3.5 — 4.1
Spodumene, $LiAl(SiO_3)_2$	3.13 — 3.20
Staurolite, $H_4(Fe,Mg)_6(Al,Fe)_{24}Si_{11}O_{66}$	3.65 — 3.75
Steel	7.60 — 7.80
Stephanite, Ag_5SbS_4	6.2 — 6.3
Stibnite, Sb_2S_3	4.52 — 4.62
Stillbite, $H_4(Na_2,Ca)Al_2Si_6O_{18}+4H_2O$	2.094 — 2.205
Strontianite, $SrCO_3$	3.680 — 3.714
Sulphur, S	2.07 — 2.09
Sylvanite, $(Au,Ag)Te_2$	7.9 — 8.3
Talc, $H_2Mg_3Si_4O_{12}$	2.7 — 2.8
Tenorite, CuO	5.825 — 6.25
Tephroite, Mn_2SiO_4	4.0 — 4.12
Tetradymite, $Bi_2(Te.S)_3$	7.2 — 7.6
Tetrahedrite, $4Cu_2S.Sb_2S_3$	4.4 — 5.1
Tin, Sn	7.29
Titanite, $CaTiSiO_5$	3.4 — 3.56
Topaz, $[Al(O,F_2)]AlSiO_4$	3.4 — 3.65
Tourmaline, $[(Na,Li,K)_6(Mg,Fe,Ca)_3$ or $(Al,B,Cr,Fe)_2]SiO_5$	2.98 — 3.20
Turgite, $2Fe_2O_3.H_2O$	4.29 — 4.49
Valentinite, Sb_2O_3	5.566
Vivianite, $Fe_3P_2O_8+8H_2O$	2.58 — 2.68
Wad, Impure hydrous oxide of manganese	3.0 — 4.26
Willemite, Zn_2SiO_4	3.89 — 4.18
Witherite, $BaCO_3$	4.29 — 4.35
Wolframite, $(Fe,Mn)WO_4$	7.2 — 7.5
Wrought Iron	7.79 — 7.85
Wulfenite, $PbMoO_4$	6.7 — 7.0
Zaratite, $NiCo_3.2Ni(OH)_2+4H_2O$	2.57 — 2.69
Zinc	7.15
Zincite, ZnO	5.43 — 5.7
Zircon, $ZrSiO_4$	4.68 — 4.70

Weight of Broken Ore.

This is important in figuring for a mill and in comparing work at various places. For example, in estimating the tonnage capacity of crushing machinery, the specific gravity of the ore, or in other words, its volume, must be considered as well as its hardness

The weight of a cubic foot of crushed rock depends on the manner of crushing. As a rule, the finer it is, the less the weight. A mixture of coarse and fine will weigh more per cubic foot then either coarse or fine separately. The weight of

coarse ore per cubic foot may be calculated from the volume of the skip or car and the weight of its contents; for fine stuff a little box holding exactly one cubic foot is to be recommended.

Vezin's rule (probably for ore crushed fairly fine) is that the weight of mixed coarse and fine crushed ore is 57% of the weight of uncrushed ore, or the volume is increased by crushing, to one and three-fourths times the volume of solid rock. The specific gravity of galena is 7.5 and that of quartz is 2.62. Then the specific gravity of an ore containing 15% galena and 85% quartz before crushing, would be $0.15 \times 7.5 + 0.85 \times 2.62$ or 3.335. The specific gravity, after crushing, would be 57% of 3.335 or 1.9. Taking the weight of a cubic foot of water as 62.5 pounds, then the crushed ore would weigh 62.5×1.9 or 118.7 pounds. Vezin estimated that one cubic foot, after being crushed to about ½-inch size, would weigh 90 pounds, or there would be 22.2 cubic feet per ton.

Kirby states that ores in place are full of small fractures and may be spongy or porous so that they will not weigh as much as solid compact specimens of mineral. His figures are given in Table 152. Oxidized ores in place cannot be well calculated and their weight should be determined in each case by actual test. Broken ore on dumps in pieces ranging from the size of one's head to gravel contains from 35 to 50% interstitial spaces, that is, the weight of the broken ore is from 50 to 65% of the weight of the ore in place.

TABLE 152. — KIRBY'S VALUE FOR ORE IN PLACE.

Material.	Weight per Cubic Foot.		Cubic Feet per Ton.	
	Theoretically* Pounds.	Practically. Pounds.	Theoretically*	Practically.
Galena	465	426	4.3	4.7
Pyrite	313	286	6.4	7.0
Blende	250	235	8.0	8.5
Hematite	303	267	6.6	7.5
Limonite	238	213	8.4	9.4
Dolomite	175	160	11.4	12.5
Limestone andesite, syenite	168	154	11.9	13.0
Vein quartz, granite, and granite rocks	168	148	11.9	13.5
Clay, quartz, porphyry, trachytes, rhyolites, etc.	163	138	12.3	14.5
Vein quartz with 15% galena	187	164	10.7	12.2
Vein quartz with 15% pyrites	180	160	11.1	12.5
Vein quartz with 10% hematite	175	155	11.4	12.9

* Calculated from average specific gravity for pure unaltered specimens.

McDonald's figures are given in Table 153. These values are probably for ore as it comes to the mill.

TABLE 153. — MCDONALD'S FIGURES ON WEIGHT OF ORE.

Material.	Weight per Cubic Foot.		Cubic Feet per Ton.	
	In Place. Pounds.	Broken. Pounds.	In Place.	Broken.
Granite and porphyry	170	97	11.8	20.6
Gneiss	168	96	11.9	20.8
Greenstone and trap	187	107	10.7	18.7
Limestone	168	96	11.9	20.8
Slate	175	95	11.4	21.1
Quartz	165	94	12.1	21.3
Sandstone	151	86	13.2	23.3
Earth in bank	111	—	18.0	.....
Earth dry and loose	.....	74	.....	27.0
Clay	118	.....	17.0	.....
Sand	80	.....	25.0	.....

TABLE 154. — FOR CONVERTING SLOPE IN DEGREES TO SLOPE IN INCHES.

NOTE. — The column headed "Inches per Inch" is also the geometrical tangent of the angle. The tangent should always be used in figuring slope angles in preference to the sine. By moving the decimal point in this column two places to the right the slope is then expressed as so much in one hundred, or in other words, as percent. The last column is intended for use on vanners, and as the steepest vanner found by the author in the mills sloped only 1½ inches per foot, it was not considered necessary to continue this column in the table beyond 2 inches per foot.

Degrees.	Inches per Inch.	Inches per Foot.	Inches per 12 Feet.	Degrees.	Inches per Inch.	Inches per Foot.	Inches per 12 Feet.
0° 5′	.00145	.01745	.20938	1° 0′	.01746	.20946	2.51352
10′	.00291	.03490	.41875	5′	.01891	.22692	2.72304
15′	.00436	.05236	.62827	10′	.02037	.24438	2.93256
20′	.00582	.06980	.83765	15′	.02182	.26184	3.14208
25′	.00727	.08726	1.04717	20′	.02328	.27930	3.35160
30′	.00873	.10471	1.25654	25′	.02473	.29676	3.56112
35′	.01018	.12217	1.46606	30′	.02619	.31422	3.77064
40′	.01164	.13963	1.67558	35′	.02764	.33169	3.98030
45′	.01309	.15708	1.88496	40′	.02910	.34916	4.18997
50′	.01455	.17454	2.09448	45′	.03055	.36662	4.39949
55′	.01600	.19200	2.30400	50′	.03201	.38410	4.60915

Degrees.	Inches per Inch.	Inches per Foot.	Inches per 12 Feet.
55′	.03346	.40157	4.81882
2° 0′	.03492	.41904	5.02848
5′	.03638	.43652	5.23829
10′	.03783	.45400	5.44795
15′	.03929	.47148	5.65776
20′	.04075	.48895	5.86742
25′	.04220	.50644	6.07723
30′	.04366	.52392	6.28704
35′	.04512	.54142	6.49699
40′	.04658	.55890	6.70680
45′	.04803	.57640	6.91675
50′	.04949	.59389	7.12670
55′	.05095	.61139	7.33666
3° 0′	.05241	.62888	7.54661
5′	.05387	.64639	7.75670
10′	.05533	.66390	7.96680
15′	.05678	.68141	8.17690
20′	.05824	.69892	8.38700
25′	.05970	.71642	8.59709
30′	.06116	.73394	8.80733
35′	.06262	.75146	9.01757
40′	.06408	.76899	9.22781
45′	.06554	.78652	9.43819
50′	.06700	.80405	9.64858
55′	.06847	.82158	9.85896
4° 0′	.06993	.83911	10.06934
5′	.07139	.85666	10.27987
10′	.07285	.87420	10.49040
15′	.07431	.89174	10.70093
20′	.07578	.90930	10.91160
25′	.07724	.92686	11.12228
30′	.07870	.94441	11.33294
35′	.08017	.96189	11.54376
40′	.08163	.97955	11 75458
45′	.08309	.99712	11.96539
50′	.08456	1.01470	12.17635
55′	.08602	1.03228	12.38731
5° 0′	.08749	1.04986	12.59827
5′	.08895	1.06745	12.80938
10′	.09042	1.08504	13.02048
15′	.09189	1.10264	13.23173
20′	.09335	1.12025	13.44298
25′	.09482	1.13785	13.65422
30′	.09629	1.15547	13.86562
35′	.09776	1.17308	14.07701
40′	.09923	1.19070	14.28840

Degrees.	Inches per Inch.	Inches per Foot.	Inches per 12 Feet.
45′	.10069	1.20833	14.49994
50′	.10216	1.22597	14.71162
55′	.10363	1.24361	14.92330
6° 0′	.10510	1.26125	15.13498
5′	.10658	1.27890	15.34680
10′	.10805	1.29655	15.55862
15′	.10952	1.31420	15.77045
20′	.11099	1.33187	15.98242
25′	.11246	1.34954	16.19453
30′	.11394	1.36722	16.40664
35	.11541	1.38491	16.61890
40	.11688	1.40260	16.83115
45′	.11836	1.42028	17.04341
50′	.11983	1.43798	17.25581
55′	.12131	1.45570	17.46835
7° 0′	.12278	1.47341	17.68090
5′	.12426	1.49113	17.89358
10′	.12574	1.50886	18.10627
15′	.12722	1.52659	18.31910
20′	.12869	1.54433	18 53194
25′	.13017	1.56208	18.74491
30′	.13165	1.57982	18.95789
35′	.13313	1.59758	19.17101
40′	.13461	1.61534	19.38413
45	.13609	1.63313	19.59754
50′	.13758	1.65090	19.81080
55′	.13906	1.66870	20.02435
8° 0′	.14054	1.68648	20.23776
5	.14202	1.70429	20.45146
10	.14351	1.72210	20.65515
15′	.14499	1.73992	20.87899
20′	.14648	1.75774	21.09283
25′	.14796	1.77557	21.30682
30′	.14945	1.79341	21.52094
35′	.15094	1.81126	21.73507
40′	.15243	1.82911	21.94934
45′	.15391	1.84497	22.16362
50′	.15540	1.86485	22.37818
55′	.15689	1.88272	22.59259
9° 0′	.15838	1.90061	22.80730
5′	.15988	1.91850	23.02200
10′	.16137	1.93640	23.23685
15′	.16286	1.95432	23.45184
20′	.16435	1.97224	23.66683
25′	.16585	1.99016	23.88197
30′	.16734	2.00810	24.09275

Degrees.	Inches per Inch.	Inches per Foot.
35′	.16884	2.02606
40′	.17033	2.04401
45′	.17183	2.06197
50′	.17333	2.07995
55′	.17483	2.09792
10° 0′	.17633	2.11592
5′	.17783	2.13392
10′	.17933	2.15192
15′	.18083	2.16995
20′	.18233	2.18797
25′	.18384	2.20602
30′	.18534	2.22407
35′	.18684	2.24212
40′	.18835	2.26019
45′	.18986	2.27826
50′	.19136	2.29636
55′	.19287	2.31445
11° 0′	.19438	2.33256
5′	.19589	2.35068
10′	.19740	2.36880
15′	.19891	2.38694
20′	.20042	2.40509
25′	.20194	2.42326
30′	.20345	2.44142
35′	.20497	2.45960
40′	.20648	2.47780
45′	.20800	2.49600
50′	.20952	2.51422
55′	.21104	2.53243
12° 0′	.21256	2.55067

Degrees.	Inches per Inch.	Inches per Foot.
5′	.21408	2.56892
10′	.21560	2.58718
15′	.21712	2.60545
20′	.21864	2.62373
25′	.22017	2.64203
30′	.22169	2.66033
35	.22322	2.67865
40′	.22475	2.69698
45′	.22628	2.71531
50′	.22781	2.73367
55′	.22934	2.75203
13° 0′	.23087	2.77042
5′	.23240	2.78880
10′	.23393	2.80721
15′	.23547	2.82562
20′	23700	2.84405
25′	.23854	2.86249
30′	.24008	2.88094
35′	.24162	2.89940
40′	.24316	2.91788
45′	.24470	2.93638
50′	.24624	2.95488
55′	.24778	2.97340
14° 0′	.24933	2.99194
5′	.25087	3.01048
10′	.25242	3.02904
15′	.25397	3.04760
20′	.25552	3.06619
25′	.25707	3.08479
30′	.25862	3.10340

Degrees.	Inches per Inch.	Inches per Foot.	Degrees.	Inches per Inch.	Inches per Foot.
35′	.26017	3.12203	45′	.39896	4.78751
40′	.26172	3.14068	50′	.40065	4.80775
45′	.26328	3.15934	55′	.40234	4.82802
50′	.26483	3.17800	22° 0′	.40403	4.84831
55′	.26639	3.19668	5′	.40572	4.86863
15° 0′	.26795	3.21539	10′	.40741	4.88896
5′	.26951	3.23410	15′	.40911	4.90932
10′	.27107	3.25283	20′	.41081	4.92971
15′	.27263	3.27157	25′	.41251	4.95012
20′	.27419	3.29033	30′	.41421	4.97056
25′	.27576	3.30910	35′	.41592	4.99102
30′	.27732	3.32789	40′	.41763	5.01150
35′	.27889	3.34669	45′	.41933	5.03201
40′	.28046	3.36551	50′	.42105	5.05255
45′	.28203	3.38435	55′	.42276	5.07311
50′	.28360	3.40319	23° 0′	.42447	5.09369
55′	.28517	3.42206	5′	.42619	5.11430
16° 0′	.28675	3.44094	10′	.42791	5.13494
5′	.28832	3.45984	15′	.42963	5.15560
10′	.28990	3.47875	20′	.43136	5.17628
15′	.29147	3.49768	25′	.43308	5.19701
20′	.29305	3.51662	30′	.43481	5.21774
25′	.29463	3.53558	35′	.43654	5.23850
30′	.29621	3.55456	40′	.43828	5.25930
35′	.29780	3.57355	45′	.44001	5.28012
40′	.29938	3.59256	50′	.44175	5.30096
45′	.30097	3.61158	55′	.44349	5.32184
50′	.30255	3.63062	24° 0′	.44523	5.34274
55′	.30414	3.64969	5′	.44697	5.36366
17° 0′	.30573	3.66876	10′	.44872	5.38462
5′	.30732	3.68785	15′	.45047	5.40560
10′	.30891	3.70697	20′	.45222	5.42660
15′	.31051	3.72610	25′	.45397	5.44764
20′	.31210	3.74524	30′	.45573	5.46871
25′	.31370	3.76440	35′	.45748	5.48980
30′	.31530	3.78358	40′	.45924	5.51092
35′	.31690	3.80278	45′	.46101	5.53207
40′	.31850	3.82199	50′	.46277	5.55325
45′	.32010	3.84122	55′	.46454	5.57446
50′	.32171	3.86047	25° 0′	.46631	5.59568
55′	.32331	3.87974	5′	.46808	5.61695
18° 0′	.32492	3.89903	10′	.46985	5.63824
5′	.32653	3.91834	15′	.47163	5.65956
10′	.32814	3.93766	20′	.47341	5.68091
15′	.32975	3.95700	25′	.47519	5.70229
20′	.33136	3.97636	30′	.47698	5.72370
25′	.33298	3.99574	35′	.47876	5.74514
30′	.33460	4.01514	40′	.48055	5.76661
35′	.33621	4.03456	45′	.48234	5.78810
40′	.33783	4.05400	50′	.48414	5.80963
45′	.33945	4.07345	55′	.48593	5.83120
50′	.34108	4.09292	26° 0′	.48773	5.85278
55′	.34270	4.11241	5′	.48953	5.87441
19° 0′	.34433	4.13192	10′	.49134	5.89606
5′	.34596	4.15146	15′	.49315	5.91774
10′	.34758	4.17101	20′	.49495	5.93945
15′	.34922	4.19058	25′	.49677	5.96119
20′	.35085	4.21018	30′	.49858	5.98297
25′	.35248	4.22978	35′	.50040	6.00478
30′	.35412	4.24942	40′	.50222	6.02662
35′	.35576	4.26907	45′	.50404	6.04849
40′	.35740	4.28874	50′	.50587	6.07039
45′	.35904	4.30843	55′	.50769	6.09233
50′	.36068	4.32815	27° 0′	.50953	6.11430
55′	.36232	4.34789	5′	.51136	6.13630
20° 0′	.36397	4.36764	10′	.51320	6.15834
5′	.36562	4.38742	15′	.51503	6.18040
10′	.36727	4.40722	20′	.51688	6.20250
15′	.36892	4.42703	25′	.51872	6.22463
20′	.37057	4.44686	30′	.52057	6.24680
25′	.37223	4.46672	35′	.52242	6.26900
30′	.37388	4.48661	40′	.52427	6.29123
35′	.37554	4.50652	45′	.52613	6.31350
40′	.37720	4.52644	50′	.52798	6.33580
45′	.37887	4.54639	55′	.52985	6.35814
50′	.38053	4.56636	28° 0′	.53171	6.38051
55′	.38220	4.58635	5′	.53358	6.40291
21° 0′	.38386	4.60637	10′	.53545	6.42535
5′	.38553	4.62640	15′	.53732	6.44783
10′	.38721	4.64646	20′	.53920	6.47034
15′	.38888	4.66654	30′	.54107	6.49289
20′	.39055	4.68665	30′	.54296	6.51546
25′	.39223	4.70667	35′	.54484	6.53808
30′	.39391	4.72692	40′	.54673	6.56074
35′	.39559	4.74709	45′	.54862	6.58342
40′	.39727	4.76729	50′	.55051	6.60614

Degrees.		Inches per Inch.	Inches per Foot.
	55′	.55241	6.62891
29°	0′	.55431	6.65171
	5′	.55621	6.67453
	10′	.55812	6.69740
	15′	.56003	6.72031
	20′	.56194	6.74327
	25′	.56385	6.76625
	30′	.56577	6.78926
	35′	.56769	6.81233
	40′	.56962	6.83543
	45′	.57155	6.85856
	50′	.57348	6.88174
	55′	.57541	6.90494
30°	0′	.57735	6.92820
	5′	.57929	6.95149
	10′	.58124	6.97482
	15′	.58318	6.99818
	20′	.58513	7.02160
	25′	.58709	7.04504
	30′	.58905	7.06854
	35′	.59101	7.09206
	40′	.59297	7.11563
	45′	.59494	7.13924
	50′	.59691	7.16290
	55′	.59888	7.18658
31°	0′	.60086	7.21032
	5′	.60284	7.23409
	10′	.60483	7.25791
	15′	.60681	7.28177
	20′	.60881	7.30567
	25′	.61080	7.32961
	30′	.61280	7.35360
	35′	.61480	7.37764
	40′	.61681	7.40171
	45′	.61882	7.42582
	50′	.62083	7.44998
	55′	.62285	7.47418
32°	0′	.62487	7.49843
	5′	.62689	7.52272
	10′	.62892	7.54705
	15′	.63095	7.57144
	20′	.63299	7.59586
	25′	.63503	7.62032
	30′	.63707	7.64484
	35′	.63912	7.66939
	40′	.64117	7.69400
	45′	.64322	7.71865
	50′	.64528	7.74335
	55′	.64734	7.76809
33°	0′	.64941	7.79288
	5′	.65148	7.81772
	10′	.65355	7.84261
	15′	.65563	7.86754
	20′	.65771	7.89252
	25′	.65980	7.91755
	30′	.66189	7.94262
	35′	.66398	7.96775
	40′	.66608	7.99291
	45′	.66818	8.01814
	50′	.67028	8.04341
	55′	.67239	8.06873
34°	0′	.67451	8.09410
	5′	.67663	8.11951
	10′	.67875	8.14499
	15′	.68088	8.17050
	20′	.68301	8.19607
	25′	.68514	8.22169
	30′	.68728	8.24737
	35′	.68942	8.27309
	40′	.69157	8.29886
	45′	.69372	8.32469
	50′	.69588	8.35057
	55′	.69804	8.37650
35°	0′	.70021	8.40248
	5′	.70238	8.42852
	10′	.70455	8.45461
	15′	.70673	8.48076
	20′	.70891	8.50696
	25′	.71110	8.53320
	30′	.71329	8.55952
	35′	.71549	8.58588
	40′	.71769	8.61229
	45′	.71990	8.63876
	50′	.72211	8.66528
	55′	.72432	8.69186
36°	0′	.72654	8.71850

Degrees.		Inches per Inch.	Inches per Foot.
	5′	.72877	8.74520
	10′	.73100	8.77195
	15′	.73323	8.79876
	20′	.73547	8.82563
	25′	.73771	8.85254
	30′	.73996	8.87953
	35′	.74221	8.90657
	40′	.74447	8.93366
	45′	.74674	8.96082
	50′	.74900	8.98804
	55′	.75128	9.01531
37°	0′	.75355	9.04265
	5′	.75584	9.07003
	10′	.75812	9.09749
	15′	.76042	9.12500
	20′	.76272	9.15258
	25′	.76502	9.18022
	30′	.76733	9.20792
	35′	.76964	9.23568
	40′	.77196	9.26350
	45′	.77428	9.29138
	50′	.77661	9.31933
	55′	.77895	9.34735
38°	0°	.78129	9.37542
	5′	.78363	9.40356
	10′	.78598	9.43176
	15′	.78834	9.46003
	20′	.79070	9.48836
	25′	.79306	9.51677
	30′	.79544	9.54522
	35′	.79781	9.57376
	40′	.80020	9.60235
	45′	.80258	9.63101
	50′	.80498	9.65975
	55′	.80738	9.68854
39°	0′	.80978	9.71741
	5′	.81220	9.74634
	10′	.81461	9.77533
	15′	.81703	9.80441
	20′	.81946	9.83354
	25′	.82190	9.86275
	30′	.82434	9.89203
	35′	.82678	9.92138
	40′	.82923	9.95080
	45′	.83169	9.98029
	50′	.83415	10.00985
	55′	.83662	10.03949
40°	0′	.83910	10.06919
	5′	.84158	10.09897
	10′	.84407	10.12882
	15′	.84656	10.15874
	20′	.84906	10.18874
	25′	.85157	10.21882
	30′	.85408	10.24896
	35′	.85660	10.27919
	20′	.85912	10.30949
	45′	.86166	10.33986
	50	.86419	10.37030
	55′	.86674	10.40083
41°	0′	.86929	10.43143
	5′	.87184	10.46212
	10′	.87441	10.49287
	15′	.87698	10.52371
	20′	.87955	10.55462
	25′	.88214	10.58562
	30′	.88473	10.61670
	35′	.88732	10.64785
	40′	.88992	10.67909
	45′	.89253	10.71041
	50′	.89515	10.74180
	55′	.89777	10.77328
42°	0′	.90040	10.80485
	5′	.90304	10.83649
	10′	.90569	10.86822
	15′	.90834	10.90003
	20′	.91099	10.93193
	25′	.91366	10.96391
	30′	.91633	10.99597
	35′	.91901	11.02812
	40′	.92170	11.06035
	45′	.92439	11.09269
	50′	.92709	11.12509
	55′	.92980	11.15759
43°	0′	.93252	11.19018
	5′	.93524	11.22286
	10′	.93797	11.25562

Degrees.	Inches per Inch.	Inches per Foot.	Degrees.	Inches per Inch.	Inches per Foot.
15′	.94071	11.28847	10′	.97133	11.65591
20′	.94345	11.32141	15′	.97416	11.68987
25′	.94620	11.35445	20′	.97700	11.72394
30′	.94896	11.38757	25	.97984	11.75810
35′	.95173	11.42078	30′	.98270	11.79236
40′	.95451	11.45410	35	.98556	11.82672
45′	.95729	11.48749	40′	.98843	11.86117
50′	.96008	11.52098	45′	.99131	11.89573
55′	.96288	11.55457	50′	.99420	11.93039
44° 0′	.96569	11.58826	55′	.99710	11.96514
5′	.96850	11.62204	45° 0′	1.00000	12.00000

TABLE 155. — STANDARD GAUGES FOR BRASS AND IRON WIRE.

Number.	Iron Wire. Washburn & Moen. Diameter.		Brass Wire. Old English. Diameter.	
	Inch.	Millimeter.	Inch.	Millimeter.
0000000	0.490	12.45	.....	.....
000000	0.460	11.684	.....	.....
00000	0.430	10.922	.....	.....
0000	0.393	9.982	0.454	11.531
000	0.362	9.194	0.425	10.795
00	0.331	8.407	0.380	9.652
0	0.307	7.797	0.340	8.636
1	0.283	7.188	0.300	7.620
2	0.262	6.680	0.284	7.213
3	0.244	6.197	0.259	6.578
4	0.225	5.715	0.238	6.045
5	0.207	5.257	0.220	5.588
6	0.192	4.876	0.203	5.156
7	0.177	4.495	0.180	4.572
8	0.162	4.114	0.165	4.191
9	0.148	3.759	0.148	3.759
10	0.135	3.429	0.134	3.403
11	0.120	3.048	0.120	3.048
12	0.105	2.667	0.109	2.768
13	0.092	2.336	0.095	2.413
14	0.080	2.032	0.083	2.108
15	0.072	1.828	0.072	1.829
16	0.063	1.600	0.065	1.651
17	0.054	1.371	0.058	1.473
18	0.047	1.1938	0.049	1.2446
19	0.041	1.0414	0.040	1.0160
20	0.035	0.8890	0.035	0.8890
21	0.032	0.8128	0.0315	0.8001
22	0.028	0.7112	0.0295	0.7493
23	0.025	0.6350	0.027	0.6853
24	0.023	0.5842	0.025	0.6350
25	0.020	0.5080	0.023	0.5842
26	0.018	0.4572	0.0205	0.5207
27	0.017	0.4318	0.01875	0.4762
28	0.016	0.4064	0.0165	0.4191
29	0.015	0.3810	0.0155	0.3937
30	0.014	0.3556	0.01375	0.3492
31	0.0135	0.3429	0.01225	0.3111
32	0.013	0.3302	0.01125	0.2857
33	0.011	0.2794	0.01025	0.2603
34	0.010	0.2540	0.0095	0.2413
35	0.0095	0.2413	0.009	0.2286
36	0.009	0.2286	0.0075	0.1905
37	0.0085	0.2159	0.0065	0.1651
38	0.008	0.2032	0.00575	0.1460
39	0.0075	0.1905	0.005	0.1270
40	0.007	0.1778	0.0045	0.1143

TABLE 156. — TABLE OF DIAMETERS AND AREAS OF CIRCLES.

Diameter Inches.	Area Square Inch.	Area Square mm.	Diameter Inches.	Area Square Inch.	Area Square mm.
1/64	.0007670	.4948	2 1/64	5.1572	3,327.2
1/32	.00307	1.981	2 1/32	5.2836	3,408.8
3/64	.00690	4.452	2 3/64	5.4119	3,491.5
1/16	.01227	7.916	2 1/16	5.5413	3,575.0
5/64	.01917	12.37	2 5/64	5.6727	3,659.8
3/32	.02761	17.81	2 3/32	5.8051	3,745.2
7/64	.03758	24.25	2 7/64	5.9396	3,832.0
1/8	.04909	31.67	2 1/8	6.0751	3,919.4
9/64	.06213	40.08	2 9/64	6.2126	4,008.1
5/32	.07670	49.48	2 5/32	6.3512	4,097.5
11/64	.09281	59.88	2 11/64	6.4918	4,188.2
3/16	.11045	71.26	2 3/16	6.6335	4,279.7
13/64	.12962	83.63	2 13/64	6.7771	4,372.2
7/32	.15033	96.99	2 7/32	6.9219	4,465.7
15/64	.17257	111.34	3	7.0686	4,560.4
1/4	.19635	126.68	3 1/16	7.3662	4,752.4
17/64	.22166	143.01	3 1/8	7.6699	4,948.3
9/32	.24850	160.32	3 3/16	7.9798	5,148.2
19/64	.27688	178.63	3 1/4	8.2958	5,352.1
5/16	.30680	197.94	3 5/16	8.6179	5,559.9
21/64	.33824	218.22	3 3/8	8.9462	5,771.7
11/32	.37122	239.50	3 7/16	9.2806	5,987.5
23/64	.40574	261.77	3 1/2	9.6211	6,207.1
3/8	.44179	285.03	3 9/16	9.9678	6,430.8
25/64	.47937	309.27	3 5/8	10.3210	6,658.7
13/32	.51849	334.51	3 11/16	10.680	6,890.3
27/64	.55914	360.73	3 3/4	11.045	7,125.8
7/16	.60132	387.95	3 13/16	11.416	7,365.1
29/64	.64504	416.15	3 7/8	11.793	7,608.4
15/32	.69029	445.35	3 15/16	12.177	7,856.1
31/64	.73708	475.53	4	12.566	8,107.1
1	.78540	506.71	4 1/16	12.962	8,362 6
1 1/32	.83525	538.87	4 1/8	13.364	8,621.9
1 1/16	.88664	572.04	4 3/16	13.772	8,885.1
1 1/32	.93956	606.17	4 1/4	14.186	9,152.2
1 1/8	.99402	641.30	4 5/16	14.607	9,423.9
1 3/32	1.0500	677.42	4 3/8	15.033	9,698.7
1 1/16	1.1075	714.51	4 7/16	15.466	9,978.0
1 5/32	1.1666	752.64	4 1/2	15.904	10,261.
1 1/4	1.2272	791.74	4 9/16	16.349	10,548.
1 9/32	1.2893	831.80	4 5/8	16.800	10,839.
1 5/16	1.3530	872.90	4 11/16	17.257	11,134.
1 11/32	1.4182	914.97	4 3/4	17.721	11,433.
1 3/8	1.4849	958.90	4 13/16	18.190	11,735.
1 13/32	1.5532	1,002.1	4 7/8	18.665	12,042.
1 7/16	1.6230	1,047.1	4 15/16	19.147	12,353
1 15/32	1.6943	1,093.1	5	19.635	12,668.
1 1/2	1.7671	1,140.1	5 1/16	20.129	12,986.
1 17/32	1.8415	1,188.1	5 1/8	20.629	13,309.
1 9/16	1.9175	1,237.1	5 3/16	21.135	13,635.
1 19/32	1.9949	1,287.0	5 1/4	21.648	13,966.
1 5/8	2.0739	1,338.0	5 5/16	22.166	14,301.
1 21/32	2.1545	1,390.0	5 3/8	22.691	14,639.
1 11/16	2.2365	1,442.9	5 7/16	23.221	14,981.
1 23/32	2.3202	1,496.9	5 1/2	23.758	15,328.
1 3/4	2.4053	1,551.8	5 9/16	24.301	15,678.
1 25/32	2.4920	1,607.7	5 5/8	24.850	16,032.
1 13/16	2.5802	1,664.6	5 11/16	25.406	16,391.
1 27/32	2.6699	1,722.5	5 3/4	25.967	16,753.
1 7/8	2.7612	1,781.4	5 13/16	26.535	17,119.
1 29/32	2.8540	1,841.3	5 7/8	27.109	17,490.
1 15/16	2.9483	1,902.1	5 15/16	27.688	17,863.
1 31/32	3.0442	1,964.0	6	28.274	18,241.
2	3.1416	2,026.8	6 1/8	29.465	19,010.
2 1/32	3.2404	2,090.6	6 1/4	30.680	19,794.
2 1/16	3.3410	2,155.5	6 3/8	31.919	20,593.
2 3/32	3.4429	2,221.2	6 1/2	33.180	21,408.
2 1/8	3.5466	2,288.1	6 5/8	34.472	22,240.
2 5/32	3.6515	2,355.8	6 3/4	35.785	23,087.
2 3/16	3.7583	2,424.7	6 7/8	37.122	23,950.
2 7/32	3.8662	2,494.3	7	38.485	24,830
2 1/4	3.9761	2,565.2	7 1/4	39.871	25,723.
2 9/32	4.0871	2,636.8	7 1/2	41.282	26,633.
2 5/16	4.2000	2,709.7	7 3/4	42.718	27,560.
2 11/32	4.3141	2,783.3	7 7/8	44.179	28,503.
2 3/8	4.4301	2,858.1	7 3/4	45.664	29,461.
2 13/32	4.5473	2,933.7	7 7/8	47.173	30,434.
2 7/16	4.6654	3,010.6	7 7/8	48.707	31,424.
2 15/32	4.7866	3,088.1	8	50.265	32,420.
2 1/2	4.9087	3,166.9	8 1/4	51.849	33,451.
2 17/32	5.0320	3,246.4	8 1/2	53.456	34,488.

Diameter Inches.	Area Square Inch.	Area Square mm.	Diameter Inches.	Area Square Inch.	Area Square mm.
8⅛	55.088	35,541.	19	283.53	182,920.
8¼	56.745	36,611.	19¼	287.27	185,340.
8⅜	58.426	37,694.	19½	291.04	187,770.
8½	60.132	3 ,795.	19¾	294.83	190,210.
8⅝	61.862	39,911.	19¼	298.65	192,680.
9	63.617	41,043.	19⅛	302.49	195,150.
9⅛	65.397	42,192.	19¼	306.35	197,640.
9¼	67.201	43,355.	19⅜	310.24	200,150.
9⅜	69.029	44,535.	20	314.16	202,680.
9½	70.882	45,730.	20½	318.10	205,230.
9⅝	72.760	46,942.	20¼	322.06	207,780.
9¾	74.662	48,169.	20⅜	326.05	210,350.
9⅞	76.589	49,412.	20½	330.06	212,940.
10	78.540	50,671.	20⅝	334.10	215,550.
10⅛	80.516	51,946.	20¾	338.16	218,170.
10¼	82.516	53,236.	20⅞	342.25	220,810.
10⅜	84.541	54,542.	21	346.36	223,460.
10½	86.590	55,864.	21⅛	350.50	226,130.
10⅝	88.664	57,202.	21¼	354.66	228,810.
10¾	90.763	58,557.	21⅜	358.84	231,510.
10⅞	92.886	59,926.	21½	363.05	234,230.
11	95.033	61,311.	21⅝	367.28	236,950.
11⅛	97.205	62,713.	21¾	371.54	239,700.
11¼	99.402	64,130.	21⅞	375.83	242,470.
11⅜	101.62	65,561.	22	380.13	245,240.
11½	103.87	67,013.	22⅛	384.46	248,040.
11⅝	106.14	68,477.	22¼	388.82	250,850.
11¾	108.43	69,955.	22⅜	393.20	253,680.
11⅞	110.75	71,451.	22½	397.61	256,520.
12	113.10	72,968.	22⅝	402.04	259,380.
12⅛	115.47	74,497.	22¾	406.49	262,250.
12¼	117.86	76,039.	22⅞	410.97	265,140.
12⅜	120.28	77,600.	23	415.48	268,050.
12½	122.72	79,174.	23⅛	420.00	270,970.
12⅝	125.19	80,768.	23¼	424.56	273,910.
12¾	127.68	82,374.	23⅜	429.13	276,860.
12⅞	130.19	83,993.	23½	433.74	279,830.
13	132.73	85,632.	23⅝	438.36	282,810.
13⅛	135.30	87,290.	23¾	443.01	285,810.
13¼	137.89	88,961.	23⅞	447.69	288,830.
13⅜	140.50	90,645.	24	452.39	291,860.
13½	143.14	92,348.	24⅛	461.86	297,970.
13⅝	145.80	94,064.	24¼	471.44	304,150.
13¾	148.49	95,800.	24⅜	481.11	310,390.
13⅞	151.20	97,548.	25	490.87	316,690.
14	153.94	99,316.	25⅛	500.74	323,060.
14⅛	156.70	101,100.	25¼	510.71	329,490.
14¼	159.48	102,890.	25⅜	520.77	335,980.
14⅜	162.30	104,710.	26	530.93	342,530.
14½	165.13	106,540.	26⅛	541.19	349,150.
14⅝	167.99	108,380.	26¼	551.55	355,840.
14¾	170.87	110,240.	26⅜	562.00	362,580.
14⅞	173.78	112,120.	27	572.56	369,390.
15	176.71	114,010.	27⅛	583.21	376,260.
15⅛	179.67	115,920.	27¼	593.96	383,200.
15¼	182.65	117,840.	27⅜	604.81	390,200.
15⅜	185.66	119,780.	28	615.75	397,260.
15½	188.69	121,740.	28⅛	626.80	404,390.
15⅝	191.75	123,710.	28¼	637.94	411,570.
15¾	194.83	125,700.	28⅜	649.18	418,820.
15⅞	197.93	127,700.	29	660.52	426,140.
16	201.06	129,720.	29⅛	671.96	433,520.
16⅛	204.22	131,750.	29¼	683.49	440,960.
16¼	207.39	133,810.	29⅜	695.13	448,470.
16⅜	210.60	135,871.	30	706.86	456,040.
16½	213.82	137,950.	30⅛	718.69	463,670.
16⅝	217.08	140,051.	30¼	730.62	471,370.
16¾	220.35	142,161.	30⅜	742.64	479,120.
16⅞	223.65	144,290.	31	754.77	486,950.
17	226.98	146,440.	31⅛	766.99	494,830.
17⅛	230.33	148,600.	31¼	779.31	502,780.
17¼	233.71	150,780.	31⅜	791.73	510,780.
17⅜	237.10	152,970.	32	804.25	518,870.
17½	240.53	155,180.	32⅛	816.86	527,010.
17⅝	243.98	157,410.	32¼	829.58	535,210.
17¾	247.45	159,640.	32⅜	842.39	543,480.
17⅞	250.95	161,900.	33	855.30	551,810.
18	254.47	164,170.	33⅛	868.31	560,200.
18⅛	258.02	166,460.	33¼	881.41	568,650.
18¼	261.59	168,770.	33⅜	894.62	577,170.
18⅜	265.18	171,080.	34	907.92	585,750.
18½	268.80	173,420.	34⅛	921.32	594,400
18⅝	272.45	175,770.	34¼	934.82	603,110.
18¾	276.12	178,140.	34⅜	948.42	611,880.
18⅞	279.81	180,520.	35	962.11	620,710.

Diameter Inches.	Area Square Inch.	Area Square mm.	Diameter Inches.	Area Square Inch.	Area Square mm.
35½	975.91	629,620.	70	3,848.5	2,482,900.
35¾	989.80	638,580.	71	3,959.2	2,534,300.
35⅞	1,003.8	647,610.	72	4,071.5	2,626,800.
36	1,017.9	656,710.	73	4,185.4	2,700,300.
36¼	1,032.1	665,870.	74	4,300.8	2,774,700.
36½	1,046.3	675,030.	75	4,417.9	2,850,300.
36¾	1,060.7	684,320.	76	4,536.5	2,926,800.
37	1,075.2	693,680.	77	4,656.6	3,004,300.
37¼	1,089.8	703,100.	78	4,778.4	3,082,800.
37½	1,104.5	712,580.	79	4,901.7	3,162,400.
37¾	1,119.2	722,060.	80	5,026.5	3,242,900.
38	1,134.1	731,680.	81	5,153.0	3,324,500.
38¼	1,149.1	741,350.	82	5,281.0	3,407,100.
38½	1,164.2	751,100.	83	5,410.6	3,480,700.
38¾	1,179.3	760,840.	84	5,541.8	3,575,300.
39	1,194.6	770,710.	85	5,674 5	3,661,000.
39¼	1,210.0	780,640.	86	5,808.8	3,747,600.
39½	1,225.4	790,580.	87	5,944.7	3,835,300.
39¾	1,241.0	800,640.	88	6,082.1	3,923,900.
40	1,256.6	810,710.	89	6,221.1	4,013,600.
40¼	1,272.4	820,900.	90	6,361.7	4,104,300.
40½	1,288.2	831,100.	91	6,503.9	4,196,100.
40¾	1,304.2	841,420.	92	6,647.6	4,288,800.
41	1,320.3	851,800.	93	6,792.9	4,382,500.
41¼	1,336.4	862,190.	94	6,939.8	4,477,300.
41½	1,352.7	872,710.	95	7,088.2	4,573,000.
41¾	1,369.0	883,220.	96	7,238.2	4,669,800.
42	1,385.4	893,800.	97	7,389.8	4,767,600.
42¼	1,402.0	904,510.	98	7,543.0	4,866,400.
42½	1,418.6	915,220.	99	7,697.7	4,966,200.
42¾	1,435.4	926,060.	100	7,854.0	5,067,100.
43	1,452.2	936,900.	101	8,011.9	5,169,000.
43¼	1,469.1	947,800.	102	8,171.3	5,271,800.
43½	1,486.2	958,840.	103	8,332.3	5,375,700.
43¾	1,503.3	969,870.	104	8,494.9	5,480,600.
44	1,520.5	980,970.	105	8,659.0	5,586,400.
44¼	1,537.9	992,190.	106	8,824.7	5,693,300.
44½	1,555.3	1,003,400.	107	8,992.0	5,801,300.
44¾	1,572.8	1,014,700.	108	9,160.9	5,910,200.
45	1,590.4	1,026,100.	109	9,331.3	6,020,200.
45¼	1,608.2	1,037,500.	110	9,503.3	6,131,100.
45½	1,626.0	1,049,000.	111	9,676.9	6,243,100.
45¾	1,643.9	1,060,600.	112	9,852.0	6,356,100.
46	1,661.9	1,072,200.	113	10,029	6,470,300.
46¼	1,680.0	1,083,900.	114	10,207	6,585,100.
46½	1,698.2	1,095,600.	115	10,387.	6,701,300.
46¾	1,716.5	1,107,400.	116	10,568.	6,818,100.
47	1,734.9	1,119,300.	117	10,751	6,936,100.
47¼	1,753.5	1,131,300.	118	10,936.	7,055,500.
47½	1,772.1	1,143,300.	119	11,122.	7,175,500.
47¾	1,790.8	1,155,400.	120	11,310.	7,296,800.
48	1,809.6	1,167,500.	122	11,690.	7,541,900.
48½	1,847.5	1,191,900.	124	12,076.	7,791,000.
49	1,885.7	1,216,600.	126	12,469.	8,044,500.
49½	1,924.4	1,241,500.	128	12,868.	8,301,900.
50	1,963.5	1,266,800.	130	13,273.	8,563,200.
50½	2,003.0	1,292,300.	132	13,685.	8,829,000.
51	2,042.8	1,317,900.	134	14,103.	9,098,700.
51½	2,083.1	1,343,900.	136	14,527.	7,392,200.
52	2,123.7	1,370,100.	138	14,957.	9,649,700.
52½	2,164.8	1,396,600.	140	15,394.	9,931,600.
53	2,206.2	1,423,400.	142	15,837.	10,217,000.
53½	2,248.0	1,450,300.	144	16,286.	10,507,000.
54	2,290.2	1,477,500.	146	16,742.	10,801,000.
54½	2,338.8	1,505,000.	148	17,203.	11,099,000.
55	2,375.8	1,532,800.	150	17,671.	11,401,000.
55½	2,419.2	1,560,800.	152	18,146.	11,707,000.
56	2,463.0	1,589,000.	154	18,627.	12,017,900.
56½	2,507.2	1,617,500.	156	19,113.	12,331,000.
57	2,551.8	1,646,300.	158	19,607.	12,650,000.
57½	2,596.7	1,675,300.	160	20,106.	12,972,000.
58	2,642.1	1,704,600.	162	20,612.	13,298,000.
58½	2,687.8	1,734,100.	164	21,124.	13,628,000.
59	2,734.0	1,763,900.	166	21,642.	13,963,000.
59½	2,780.5	1,793,900.	168	22,167.	14,301,000.
60	2,827.4	1,824,100.	170	22,698.	14,644,000.
61	2,922.5	1,885,500.	172	23,235.	14,990,000.
62	3,019.1	1,947,800.	174	23,779.	15,341,000.
63	3,117.2	2,011,100.	176	24,328.	15,695,000.
64	3,217.0	2,075,500.	178	24,885.	16,055,000.
65	3,318.3	2,140,800.	180	25,447.	16,417,000.
66	3,421.2	2,207,200.	182	26,016.	16,784,000.
67	3,525.7	2 274,600.	184	26,590.	17,155,000.
68	3,631.7	2,343,000.	186	27,172.	17,530,300.
69	3,739.3	2,412,400.	188	27,759.	17,909,000.

Diameter Inches.	Area Square Inch.	Area Square mm.	Diameter Inches.	Area Square mm.	Area Square Inch.
190	28,353.	18,292,000.	216	36,644.	23,641,000.
192	28,953.	18,679,000.	218	37,325.	24,081,000.
194	29,559.	19,070,000.	220	38,013.	24,524,000.
196	30,172.	19,466,000.	222	38,708.	24,973,000.
198	30,791.	19,865,000.	224	39,408.	25,424,000.
200	31,416.	20,268,000.	226	40,115.	25,881,000.
202	32,047.	20,675,000.	228	40,828.	26,341,000.
204	32,685.	21,087,000.	230	41,548.	26,805,000.
206	33,329.	21,503,000.	232	42,273.	27,273,000.
208	33,979.	21,922,000.	234	43,005.	27,745,000.
210	34,636.	22,346,000.	236	43,744.	28,222,000.
212	35,299.	22,774,000.	238	44,488.	28,702,000.
214	35,968.	23,205,000.	240	45,239.	29,186,000.

TABLE 157. — QUARTZ DIAMETERS AND VELOCITIES FOR COMPUTING SPIGOTS SORTING COLUMNS, POCKETS, CONES, AND TANKS.

Diameters.		Average Diameter mm.	Velocities.		
Through Screen mm.	On Screen mm.		Average mm. Sec.	Maximum mm. Sec.	Minimum mm. Sec.
12.85	11.01	11.93	393.	489.	271.
		11.80	391.		
		11.60	387.		
		11.40	383.		
		11.20	379.		
		11.00	375.		
		10.80	371.		
		10.60	368.		
		10.40	364.		
11.01	9.51	10.26	361.	489.	252.*
		10.20	360.		
		10.00	358.		
		9.80	355.		
		9.60	352.		
		9.40	350.		
		9.20	347.		
		9.00	345.		
		8.80	342.		
9.51	7.79	8.65	340.	489.	231.*
		8.60	339.		
		8.40	333.		
		8.20	329.		
		8.00	321.		
		7.80	316.		
		7.60	311.		
		7.40	305.		
7.79	6.85	7.32	303.	489.	227.
		7.20	301.		
		7.00	298.		
		6.80	295.		
		6.60	292.		
6.85	5.97	6.41	289.	416.	185.
		6.20	283.		
		6.00	277.		
		5.80	270.		
		5.60	264.		
5.97	4.95	5.46	260.	362.	172.
		5.40	259.		
		5.20	254.		
		5.00	250.		
		4.90	247.		
		4.80	245.		
		4.70	243.		
		4.60	240.		
4.95	4.21	4.58	240.	345.	153.
		4.50	237.		
		4.40	233.		
		4.30	230.		
		4.20	226.		
4.21	4.12	4.17	225.	345.	154.
		4.10	223.		
		4.00	221.		
3.48		3.90	219.		
		3.80	216.		
		3.70	214.		

* These figures were observed all through the table. See §351. The others are interpolated.

Diameters.		Average Diameter mm.	Velocities.		
Through Screen mm.	On Screen mm.		Average mm. Sec.	Maximum mm. Sec.	Minimum mm. Sec.
		3.60	212.		
		3.50	209.		
4 .12	2.83	3.48	209.	307.	154.
		3.40	207.		
		3.30	204.		
		3.20	201.		
		3.10	198.		
		3.00	196.		
		2.90	193.		
2.83	2.82	2.83	191.	256.	127.
		2.80	189.		
		2.70	183.		
		2.60	177.		
		2.50	172.		
2.82	2.05	2.44	168.	252.	119.
		2.40	167.		
		2.30	166.		
2.49	2.06	2.28	166.	238.	89.
		2.20	162.		
		2.10	158.		
		2.00	153.		
		1.90	148.		
2.06	1.63	1.85	146.	227.	71.
		1.80	142.		
		1.70	134.		
1.63	1.46	1.60	126.	192.	68.
		1.55	124.		
		1.50	122.		
		1.45	121.		
		1.40	119.		
1.46	1.27	1.37	118.	173.	82.
		1.35	116.		
		1.30	113.		
		1.25	109.		
		1.20	106.		
1.27	1.10	1.19	105.	156.	69.
		1.15	102.		
		1.10	98.		
		1.05	95.		
1.10	.97	1.04	94.	147.	64.
		1.00	91.		
		.98	89.		
		.96	88.		
		.94	86.		
		.92	85.		
.97	.84	.91	84.	119.	43.
		.90	84.		
		.88	83.		
		.86	82.		
		.84	81.		
		.82	80.		
		.80	79.		
		.78	78.		
.84	.68	.76	77.	114.	40.
		.74	75.		
		.72	74.		
		.70	72.		
		.68	71.		
		.66	69.		
		.64	68.		
.68	.57	.63	67.	89.	36.
		.62	66.		
		.60	64.		
		.59	62.		
		.58	61.		
		.57	60.		
		.56	59.		
		.55	58.		
		.54	56.		
		.53	55.		
		.52	54.		
.57	.45	.51	53.	78.	32.
		.50	52.		
		.49	51.		
		.48	49.		
		.47	48.		
		.46	47.		
		.45	46.		
		.44	45.		
		.43	44.*		
		.42	43.*		

* These figures are slightly modified from the observed figures to bring them into series.

Diameters		Average Diameter mm.	Quartz Velocities.		
Through Screen mm.	On Screen mm.		Average mm. Sec.	Maximum mm. Sec.	Minimum mm. Sec.
.45	.36	.41	42.*	61.	27.
		.40	41.*		
		.39	41.*		
Microscope		.38	40.*		
Max.	Min.				
.509	.243	.369	39.0*		
		.360	38.4*		
		.350	37.7*		
		.341	37.1*		
		.332	36.4*		
		.323	35.8		
		.314	35.1		
.413	.163	.305	34.48		
		.297	33.7		
		.288	33.0		
		.279	32.3		
		.270	31.5		
		.261	30.8		
		.252	30.0		
		.243	29.3		
.339	.114	.234	28.57		
		.222	27.2		
		.211	25.8		
.321	.130	.199	24.39		
		.194	23.		
		.190	22.		
		.186	21.		
.298	.103	.182	20.41		
		.177	20.		
		.173	19.		
		.169	19.		
		.164	18.		
		.160	18.		
.254	.0827	.156	17.24		
		.151	17.		
		.147	16.		
		.143	16.		
		.139	15.		
.252	.0655	.135	14.49		
		.130	14.		
.249	.0803	.126	12.05		
		.125	11.		
.237	.0679	.121	10.20		
		.119	10.		
		.118	9.		
.219	.0655	.116	8.55		
		.114	8.		
.235	.0569	.112	7.14		
		.108	6.916		
		.104	6.692		
		.099	6.468		
		.095	6.244		
.168	.0608	.0912	6.02		
		.0890			
		.0868			
.158	.0429	.0846	5.05		
.147	.0414	.0800	4.26		
		.0773			
.120	.0364	.0747	3.57		
		.0718			
.0972	.0387	.0689	3.00		
		.0659			
.0970	.0315	.0629	2.52		
		.0692			
.0918	.0317	.0555	2.12		
.0842	.0200	.0503	1.78		
.0718	.0164	.0478	1.50		
		.0451			
.0715	.0138	.0425	1.26		
		.0401	1.16		
.0660	.0109	.0377	1.06		
		.0360			
.0629	.0109	.0344	0.887		
.0611	.00806	.0319	0.746		
		.0300	0.687		
		.0282	0.627		
.0539	.00962	.0282	0.627		
.0543	.00780	.0267	0.526		
.0462	.00868	.0253	0.442		
		.0242			

* These figures are slightly modified from the observed figures to bring them into series.

Diameters by Microscope.		Average Diameter mm.	Quartz Velocity.		
Maximum mm.	Minimum mm.		Average mm. Sec.	Maximum mm. Sec.	Minimum mm. Sec.
.0462	.00666	.0232	.372		
		.0220			
.0394	.00419	.0209	.313		
		.0203	.3004		
		.0198	.2876		
		.0193	.2748		
.0408	.00326	.0188	.262		
		.0185			
.0323		.0182	.220		
		.0177			
		.0173			
		.0169			
		.0165			
.0301		.0161	.185		
		.0156	.1754		
		.0150	.1657		
.0412		.0144	.156		
		.0138			
		.0134			
		.0130			
.0403		.0126	.131		
		.0116	.12575		
		.0107	.12050		
		.00978	.11525		
.0318		.00884	.1100		
		.00811	.1056		
		.00737	.1012		
		.00663	.0968		
.0264		.00589	.0924		

INDEX.

Accelerated mechanisms used in jigging 299
Accessory apparatus 429
Accounts and reports 598
Adjustment of Blake-type breakers 16
gyratory breakers 32
rolls 51
Advantages of hand breaking 12
ore dressing 1
Air concentrators 415
jigs 416
Alignment of pillow blocks of rolls 52
Amalgam presses 123
squeezing 123
Amalgams 103
Amalgamating new plates 113
plates 104
area and thickness of 108
clean up of 116
dressing 115
general considerations 112
maintaining consistency of 115
materials for 109
position in the mill 107
principle of action of 106
slope of 108
speed of wave and thickness of film 109
tables for supporting 106
treatment of 111
Amalgamation, apparatus used in 104
as applied to gravity stamps 103
cleaning amalgam 122
effect of temperature on 119
followed by agitation 464
sorting, sizing, and agitation 464
inside plates 105
loss of gold in 126
mercury in 126
melting bullion 124
outside plates 105
retorting 123
squeezing amalgam 123
testing for 611
Angle of nip for rolls 57, 58
versus speed for rolls 61
Annular vortex classifier 229
Anthracite coal, breakers for use with .. 649
practice 647
preparation for the market 649
trade sizes for 648
Anvil blocks for steam stamps 71
Appendix 679
Apron plates 105
Arizona Copper Company, Concentrator No. 6 555
Arrangement of machines in mills 584
Arrastra, the 137
Ascending-current cones of cylinders ... 244
Assay office 613
Atomic weights, table of 680
Automatic jig discharges 304
weighing scale 456
Ayton intermittent thick-pulp extractor 246

Ball mills 150
mill test for amalgamation 611
wear of steel balls in 151
Bardwell sorting tube 603
Bar riffles 320
screens for screening anthracite ... 651
Batea 606
mechanical 324
Bearings of rolls 52
Belt percussion table 386
screens 217
Belting 576
Binckley system of settling tanks 247
Bins and receiving floors 429
for steam stamps 76
Bituminous-coal practice 624
Blaisdell system of mechanical ore handling 441
Blake breaker 13
Denison weigher 456
Blanket tables 323
Blasting in the mine 9
Boss or stamp head 100
Boston and Montana mill, Great Falls, Mont. 541
Bottle amalgamation 612
Box classifiers 238
Boxes of rolls 52
Bradford coal breaker 624
Breaking by hammers 9
Breakers, mechanical 13
Brittleness of minerals under crushing force 463
Brunton sampler 433
Buddles 368
comparison of convex and concave 369
concave 369
convex 368
rectangular 370
Building buddles 368
Bullion, fineness of 125
melting 125
Bunker Hill and Sullivan mill, Kellogg, Idaho 488

Calcining carbonates for magnetism ... 412
for friability ... 9
Callow cones ... 244
traveling belt screen ... 217
Calumet and Hecla mill ... 559
Campbell table ... 635
Cams ... 97
design of ... 98
friction and lubrication of ... 99
lateral thrust of ... 102
Cam shaft ... 97
Canvas tables ... 366
for testing ... 608
Capacities of Blake-type breakers ... 16
gyratory breakers ... 33
jigs ... 307
rolls ... 66
steam stamps ... 77
Carpet tables ... 323
Central mill of the North Star Mines Company, Grass Valley, California ... 480
Centrifugal force, application of ... 463
pumps for sand and water ... 446
separation ... 425
Cheek plates ... 18
Chili mills ... 152
Christ conveyor jig ... 664
Christ jig ... 661
shaking screen ... 655
Chuck block ... 96
Chutes for coal ... 670
Clarifying reservoirs ... 248
tanks ... 246
Classification of stamps ... 71
Classifier design ... 274
jigs ... 289
Classifiers, definition of ... 219
extent of classification desirable ... 275
principles of action ... 220
Classifying by settling in water ... 219
Clean-up barrels ... 120
pan ... 121
Clinometers ... 612
Cloth screen for gravity stamps ... 92
Coal chutes ... 670
conveying to top of the breaker ... 666
dressing ... 623
impurities in ... 623
methods of washing ... 623
washeries, Luhrig-type ... 639
Robinson washery ... 642
Stein and Boericke ... 640
Coarse-sand concentrating ... 277
Cobbing hammers ... 11
magnets ... 397
Cocoa matting tables ... 321
Cattermole process ... 422
Comparison of Blake and Dodge-type breakers ... 25
jaw and gyratory breakers ... 40
various classes of gyratory breakers 35
steam stamps ... 79
Compressive strength of stone ... 165
Concaves, method of inserting ... 30
Concentrating machines, care of ... 364
Concentration, limit of ... 589
Connecting rods for jig plungers ... 298
Construction of rolls ... 47
Conveying coal in the breaker ... 666
Conveyors ... 438
for coal handling ... 673
Cornish frames ... 365
Corrugated and toothed rolls ... 625
Cost of breaking with gyratory breakers. 39
jaw breakers ... 21, 24
crushing by gravity stamps ... 134
Huntington mills ... 160
rolls ... 69
steam stamps ... 77
tube mills ... 148
erecting mills ... 596
hand sorting ... 195
milling ... 597
screening ... 213
wearing parts for gyratory breakers 36
jaw breakers ... 18, 24
Costs, operating ... 596
Coxe gyrating screen ... 207
in coal dressing ... 656
Cradles or rockers ... 323
Crickboom log washer ... 189
Cross-compound steam stamps ... 78
Cross-over dumps ... 668
Crushers for testing laboratories ... 600
Crushing, comparison of re-grinding machines ... 177
conditions under which effected ... 173
cylinders for rolls ... 48
power losses in ... 173
work expended in ... 167
Cylindrical driers ... 453

DeBavay process ... 423
Decrepitation of minerals ... 462
Deep-pocket free-settling classifiers ... 223
Definition of an ore ... 1
ore dressing ... 1
Delprat process ... 423
Depth of bed in slime tables ... 392
for Richards' pulsator jig ... 294
Design of machines ... 578
Diameter of rolls ... 54
Diameters and areas of circles, table of 687
Dies for gravity stamps ... 101
steam stamps ... 72
Differential-motion mechanisms used in jigging ... 299
Dimmick classifier ... 248
sizing launder ... 248
Discharge of steam stamps ... 76
Disintegration and screening ... 425
Distributing devices ... 248
Distributors ... 437
and collectors ... 108
Dodge breaker ... 23
Drag-stone mill ... 137
Driers, mechanical ... 453
Driving mechanism for rolls ... 53
Drop between sieves in jigs ... 302
hammers ... 12
Drying floors ... 453
washed coal ... 637
Dry blanket ... 419
panning ... 419

Dust fans and chambers 456

Eccentrics for jig plungers 298
Edge runners 152
Edison magnetic separator 405
Electro-conductivity 462
Electro-magnets 394
Electrostatic separation 413
separators 414
Elmore vacuum oil process 422
Elevators 443
capacity of when handling coal ... 677
for handling coal 675
power required for handling coal by 677
Elutriation 461
Emery slate picker 657
Empire Zinc Company's mill, Canon City, Colorado 506
End-bump tables 324
Equivalents of weights and measures, table of 679
Evans classifiers 221
Expended metal riffles 321
Extraction, percentage of in concentration 588

Federal Lead Company Mill 3, Flat River, Missouri 495
Feeders for gravity stamps 103
rolls 51
automatic 435
Gates 435
Feeders, Hendy's Challenge 435
Feeding arrangements for steam stamps 76
Feed to Richards' pulsator jig, size of 294
Ferraris shaking screen 205
Film gauge 612
sizers, belt type 379
choice of slope for 383
experiments with 379
sizing tables 365, 372
Fine concentration test 618
sand concentrating 319
Finger bars 652
Fixed-sieve jigs 283
Fleming dewatering wheel 452
Floors for steam stamps 76
Flotation processes 421
Cattermole 422
DeBavay 423
Elmore 422
Macquisten 424
Potter and Delprat 423
testing for 608
theory of 421
Foundations for steam stamps 71
Frame for steam stamps 71
Frames, Cornish or rag 365
for rolls 47
Free settling, definition of 262
general principles of 263
ratios 268
versus hindered settling 273
Full-teeter velocities of quartz and galena grains 272
Frenier spiral sand pump 446
Friability of minerals under a blow ... 463
Friction clutches 578
in roll journals 62

Gate and dam discharges for jigs 305
Gates feeder 435
gyratory breaker 28
Gauges for brass and iron wire 686
wire 94
Gearing 578
General principles of pulsion in jigging 309
remarks upon jaw breakers 24
Gilpin County bumping table 324
Gold pan 606
Graded crushing with rolls 68
Graphical representation of sizing tests . 602
Gravity stamps, advantages and disadvantages of 136
and amalgamation 84
area of discharge 128
boss or stamp head 100
cams 97
cam shaft 97
chuck block 96
cloth screen for 92
collars and bearings for 96
comparison of cloth and punched-plate screen for 93
cost of crushing by 134
dies 101
driving mechanism 102
feeders 103
finger bars, cam sticks, and overhead crab 103
foundation for 85
height of discharge of 129
kind of ore treated 127
life of shoes and dies 101
lip apron 96
mercury fed to the battery 127
method of feeding 127
mortar block 85
covers 90
linings 90
mortars 89
mouth or feed opening of the battery mortar 90
order of drop 129
placing the mortar 87
screen 92
power required by 134
principle of action of 84
proportions of the parts 102
running of 127
screen for 91
screen frame for 95
screen openings 91
shoes 101
size of feed to 127
screen openings 128
speed and height of drop 130
splash board 95
stem 100
tappets 100
water pipes 103
used in stamping with 135
Greased plate, the 462
Greasy flotation 462

Griffin roller mill 161
Grinders other than gravity stamps.... 137
Grinding pans 139
in Australian practice 141
Grizzlies or bar screens 201
Guarding the work of machines..... 586
Guides for steam stamps..... 75
Gunlock manganese-steel mantle for gyratory breakers..... 37
Gyrating breakers 27
screens 207
Gyratory rock and ore breaker 28

Hancock jig..... 282
Hand jigs..... 278
picking 461
accompanied by sledging 193
of coal 656
or sorting 192
breaking for 192
cobbing 193
cost of 195
general considerations 193
picking in the mills 195
mine 194
rock house 194
sledging and spalling 193
testing by 616
sledges 9
Harz jigs 283
Head centers for gyratory breakers, cast iron..... 37
Heating concentrating mills 580
Heavy solutions, use of in testing..... 608
Height of discharge in gravity stamps.. 129
drop in gravity stamps 130
jig gate..... 306
Hendy's Challenge feeder 435
Hillside-type mill 465
Hindered-settling classifier..... 231
definition of 262
ratios 268
tubular classifier tests on 270
Hodge jig..... 287
Homestake mill, Lead, South Dakota .. 482
Hoppers for rolls 54
Horizontal log washers 188
Horn spoon 606
Housing for rolls 54
Huntington mill 154
cost of crushing by 160
feeding 156
foundations for 156
general notes on 156
life of wearing parts of 160
quality of work done by 159
screens for 156
Hutches in jigs, forms of 295
Hydraulic classifiers..... 220
limitations of 250
giants 192
water required by jigs 309

Impact screen 207
Inside amalgamating plates 105
International magnetic separator 408

Jaw breakers..... 13
plates for breakers 18
Jeffrey-Robinson coal washer..... 630
Jerking tables 325
Jet washer 192
Jig bed, effect of..... 318
for Richards' pulsator jig 294
discharges 304
Jigging tests 618
theory of 309
Jig plunger, attachment of 297
clearance of 297
Jigs 277
Christ 661
conveyor jig 664
continuous movable-sieve power jigs 281
for testing 605
Hancock 282
hand 278
Harz 283
Hodge 287
in general..... 295
Lehigh Valley 661
Luhrig 631
movable-sieve hand jigs 278
New Century 287, 633
Pittsburg 634
Richards' pulsator 291
Stewart coal 634
with fixed sieves 283
Woodbury jig 290
Journal friction in rolls 62

Kieves 371
Krause discharge for steam stamps 76

Labor in the mills 581
Langerfield slate separator 658
Large versus small breakers 20
Launders 448
Laws of classifying by settling in water. 262
crushing 165
Rittinger's theory 167
Von Reytt's tests 170
Lead ore schedules 594
Lebanon plant of the Pennsylvania Steel Company 536
Lehigh Valley jig 661
Level site for mills 471
Life of shoes and dies 101
wearing parts of gyratory breakers. 36
jaw breakers 18, 24
Lighting of mills..... 581
Liners for tube mills 143
method of inserting in gyratory breakers 30
Lip apron in gravity stamps 96
plate 105
Location of mills 572
Log washers 184
Longdale log washer 185
Lubrication and care of journals 579
Luhrig jigs for coal 631
type coal washery 639

Macquisten flotation process 424

Magnetic field, action of various minerals in 396
separation 393
cost of 396
separators, belt-type, induction, low-power 406
belt-type, low-power 401
classification of 397
drum-type, high-power 408
drum-type, low-power 403
for wet work 404
Edison 405
for testing 609
induction type 405
Wetherill 398
Magnetism, use of in ore separation 462
Mantles for gyratory breakers 37
Material for amalgamating plates 109
bottom bed of jigs 303
jig frames and tanks 295
roll shells 49
wearing parts of gyratory breakers 36
jaw breakers 18, 24
Mathematical computation of the angle of nip for rolls 60
McCully gyratory breaker 28
Mechanical distributor 249
sampling 432
Mechanisms used in jigging 299
Mercury, care and purification of 125
loss in amalgamation 126
properties of 103
traps 120
Method of studying mills 478
Methods of feeding jigs 301
Microscope, use in ore testing 613
Mill buildings, construction of 573
site 465, 572
Mill principles and processes 461
screening 262
treatment, schemes of 464
Mills, care of 588
Mills Mining and Reduction Company's mill, Hazel Green, Wisconsin 523
Mineral examination 615
Minerals Separation Company flotation process 422
Miscellaneous processes of separation .. 393
Momentum and trajectory as used in mineral separation 462
Mortar blocks for gravity stamps 85
jig with steam stamps 76
of steam stamps 71

New Century coal jig 633
jig 287
Nip, angle of for rolls 57, 58
Number of jig compartments used 306

Old English wire gauge 686
Operation of Blake-type breakers 16
Richards' pulsator jig 294
Order of drop of gravity stamps 129
Ore, definition of 1
dressing, definition of 1
plants, modern 478
Ore handling, Blaisdell system of 441
Oscillating bar screens 652
Outside amalgamating plates 105

Pan amalgamation test for silver 612
clean-up 121
Pans, grinding 139
Pardee spiral slate picker 658
Pebbles for tube mill grinding 145
Peripheral speed of rolls 55
Picking belts 198
speed and capacity of 198
chutes 197
tables and belts 196
Pillow blocks for rolls 52
Pittsburg jig 634
Phillips cross-over dump 668
Physical properties of minerals affecting ore dressing 2, 3, 4, 5
Plates, amalgamating 104
Plate amalgamation 462
screens for gravity stamps 91
Plungers for jigs 297
Pneumatic concentration 414
jigs 416
separators, advantages and disadvantages of 419
tables 418
Potter process 423
Power for Blake-type breakers 16
concentrating mills 574
gyratory breakers 33
jigs 308
rolls 63
steam stamps 77
Pratt ore sizer 203
Preliminary breaking 9
washers 183
Principle of action of gravity stamps .. 84
gyratory breakers 30
rolls 47
stamps 71
steam stamps 71
Principles of ore dressing 1
ore separation, combinations of ... 463
summary 461
screen sizing and classifying 251
Properties of mercury 103
minerals affecting ore dressing .. 2, 3, 4, 5
Pulleys for steam stamps 75
Pulsator classifier 233
jig 291
Pulsion in jigging 309
jig tests on hindered settling 310
velocity in jigs 310
Pumps for handling sand and water ... 446
Punched-plate screen 252
thickness of plate 253
Purpose of rolls 47
stamps 71
steam stamps 71

Quality of roll crushing 64
work done by gyratory breakers .. 35
jaw breakers 20, 24
steam stamps 77

Quartz diameters and free-settling velocities, table of 690

Raff wheels 444
Rag frames 365
Ramsey sludge tank 645
Range of adjustment of gyratory breakers 32
Ratio of diameter of trommel hole to roll space 62
Rectangular tables, general comments on 348
Removal of concentrates from jigs 303
tailings from jigs 306
wood, etc., from crushed ore 455
Retorting amalgam 123
Revolving picking table 198
Revolving screens, capacity and efficiency for coal 654
for coal 653
tipple 666
Richards' annular vortex classifier 229
deep-pocket hydraulic classifier ... 223
pulsator classifier 233
jig 291
Riffles 319
application of 322
Rittinger sieve scale 251
spitzkasten apparatus, investigation of 238
spitzkasten 242
table 388
theory of power required for crushing 167
Roasting and calcining for magnetism . 410
for magnetism 462
laboratory tests 610
porosity 425, 462
oxides for magnetism 411
sulphides for magnetism 411
Roasting sulphides for magnetism, experiments on 412
Robinson coal washer 630
washery 642
Rock breakers 13
riffles 320
Rogers' dewatering screen 452
Roll shells 48
Rolls 47
corrugated and toothed 625
for crushing anthracite 650
Rope transmission 578
Rowand incline screen 202

Safety devices for steam stamps 75
Samplers 430
Sampling 430
difficulties attending 430
hand 430
limit of automatic 434
mechanical 432
moisture samples 431
requisites to accuracy in 430
size of samples to be taken 433
Sand wheels 444
Scaife trough washer 628
Schedules for calculating the values of ores 592
Screen for gravity stamps 91
Screen frames 95
Screening, difficulties attending 254
limits of sieve scale 255
percentage of opening in screens .. 254
shape and arrangement of holes 254
Screen sizing 201
Screens, choice of for gravity stamps... 95
designation of size of hole in 93
for steam stamps 71
testing 601
material and cost 95
revolving for coal 653
Selection of a Blake-type breaker 15
Self-tightening mantle for gyratory breakers 32
Settling slimes, use of chemicals for 603
Shackelford's vanner-box cleaning device 353
Shaft for steam stamps 75
Shafts and pulleys for operating jig plungers 298
for rolls 48
Shaking amalgamating plates 106
screens for coal 655
or riddles 204
Shells for rolls 48
Shoes for gravity stamps 101
steam stamps 72
Short breaking heads and concaves for gyratory breakers 31
Side adjustment for rolls 51
Sieves and sieve frames for jigs 300
Sieve scale 251
Silver Lake Mill, Silverton, Colorado ... 513
Size of jig sieves 306
sieve openings in jigs 302
Sizes of Blake-type breakers 16
gyratory breakers 33
ore jigged 308
Sizing before jigging 318
sorting 463
by screens 461
water film on a surface 461
coal previous to washing 628
followed by agitation 463
magnetism and sorting 463
Skimming launders 248
the sieves of jigs 304
Slate pickers, the Emery 657
the Langerfield 658
mechanical 657
Pardee spiral 658
Slime concentrating 365
tables, capacity of 378
circular concave 375
operation of 375
convex 370, 372
compared with vanners 387
depth of bed on 392
diameter of 378
for testing 608
kind of surface for 377
preliminary pulp treatment for .. 376
pulp density 377
riffle type 391

Slime tables, Rittinger table 388
shaking or bumping 385
sizes treated 376
slope of 377
speed of 378
thickness of film on 377
water quantity 377
Wilfley slimer 389
Slimers, end-shake belt-type 385
side-shake belt-type 386
Slimes, use of chemicals for settling 603
Slope of amalgamating plates 108
table for converting degrees to inches 682
Sluice 322
plates 105
Sorting before sizing 463
by free settling in water 461
hindered settling in water 461
settling in air 461
followed by agitation 463
suction 463
suction and again by suction .. 464
Space between rolls 57
Spalfing hammers 10
Specific gravities of minerals and metals, table of 680
gravity test 613
Speed of rolls 55
versus angle of nip in rolls 61
Spindle breakers 27
Spiral sand pumps 446
slate picker 653
Spitzkasten 242
Splash board for gravity stamps 95
plates 106
Springs for rolls 52
Sprocket and chain drive 578
Stamps, principle, purpose, and classification of 71
steam 71, 75
Staves for steam stamps 72
Steam cylinders for steam stamps 74
hammers 11
stamps 71
tipple dump 668
Stedman disintegrator 625
Steeple-compound steam stamps 79
Stein and Boericke coal washery 640
Stewart jig 634
Strakes, revolving 322
Suction 461
general principles of 312
tests on 313
Surface-current box classifiers 238
Swing hammer pulverizers 163, 627
Snyder sampler 432

Tables and other useful information 679
concentrating, comparison of side and end-bump 349
tables with and without riffles. 348
Tailings, disposal of 587
Tandem-compound steam stamps 79
Tappets for gravity stamps 100
Temperature, effect on amalgamation .. 119
Testing 599
by hand picking 616
sizing and assaying 616
for a process 615
Tests on Richards' pulsator jig 294
small compared with mill runs 619
Theory of jigging 309
Thomas log washer 187
Timber riffle blocks 320
Tipple dump, steam 668
Tipple, revolving 666
Tires for rolls 48
Toggles 18
bearings 18
Tower driers 455
Trimountain Mining Company, mill of . 564
Trommels 207
action of 255
capacity of 213
compared with riddles 216
cones, pyramids, and prisms 213
cost of screening by 213
depth of bank and quality of work. 261
driving mechanism 212
effect of centrifugal force in 255
effect of length and slope combined. 260
slope of 257
speed 261
varying diameter 261
feeding 212
materials for screens for 211
octagonal 214
power required 212
rate of travel of ore in 257
sectional 215
size of 210
slope of 210
speed 211
systems of screening by 215
tandem and concentric 215
wash water in 213
Trough or shallow-pocket classifiers 221
washer 173
washers for coal 628
Truing roll shells 50
Tube and ball mills 142
Tube mill 142
capacity of 147
consumption of pebbles and liners in 148
cost of grinding by 148
direction of rotation 146
discharge opening 144
efficiency of 148
feeding 145
feed opening 143
foundation for 143
liners 143
pebbles for 145
power required by 146
quality of work 147
speed 146
theory of 176
Tubular classifier tests on hindered settling 270
Turbo log washer 187
Tyes 370

Undercurrents 322
Unwaterers and driers 452
Use of water with jaw breakers 27
Uses of steam stamps 77
Utah Copper Company, mill of 550

Valve gears for steam stamps 74
Valves for steam stamps 74
Vanner belts 354
Vanner, end-shake for testing 607
side-shake for testing 606
Vanners 350
belt travel of 360
capacity of 362
compared with convex slime tables 387
comparison of side and end shake . 357
cost of repairs, renewals, etc. 362
end-shake 355
for slime treatment 385
gyrating 358
operation of 359
power required by 362
principle of separation by 363
quality of feed for 359
side-shake 350
slope for 360
speed for 360
thickness of bed on 361
water required by 360
with tipping or undulating motion 356
Vanning plaques 606
shovels 605
Variable-crank mechanism used in jigging 299
Velocities of quartz under free-settling conditions 690
Velocity of settling under free-settling conditions 263
Ventilation and dust prevention 581
Vezin sampler 432
Vibrating screens 207
Von Reytt's tests 170

Washburn and Moen wire gauge 686
Washers, preliminary 183
Washing pans 191
Wash trommels 188
Water regulators 438
Water used by concentrating mills 582
required by jigs 309
steam stamps 76
Weight of broken ore .....
ore in place .....
Weights and measures, equivalents o
Wetherill separator .....
attendance required .....
capacity of .....
distance apart of the magnets ....
for laboratory use .....
power required by .....
wear on machine .....
width, thickness, and conveyor-belt speed .....
width, thickness, and take-off belt speed .....
Weathering of ore .....
Weighing and measuring ore .....
ore .....
Width of rolls .....
Wilfley slimer .....
table .....
agitation ratio of .....
as a slimer .....
capacity, power, water, costs ...
deck of .....
elevator .....
feed for .....
for testing .....
foundation for .....
head motion of .....
investigation of the work of ..
losses .....
operating conditions .....
setting and leveling up .....
sized versus classified feed for ...
tilting frame of .....
Wire gauges .....
screen, size of wire for .....
Tyler double-crimped, table of ..
Witherbee, Sherman and Company's mill at Mineville, New York .....
Whole current box classifiers .....
Wolf-Tongue classifier .....
Woodbury clean-up jig .....
jig .....
middlings jig .....
slime classifier .....
system of concentration .....

Zinc-ore prices, Joplin district .....
Western .....

LIBRARY OF THE UNIVERSITY OF CALIFORNIA